KOHLER®

Contemporary 12" grab bar
K-14560

Material
- Premium metal construction for durability and reliability
- KOHLER finishes resist corrosion and tarnishing

Installation
- Installation template and tools included



ADA

Codes/Standards
ADA
ICC/ANSI A117.1

KOHLER® Faucet Lifetime Limited Warranty
See website for detailed warranty information.

Available Colors/Finishes
Color tiles intended for reference only.

Color	Code	Description
	S	Polished Stainless
	SN	Vibrant® Polished Nickel
	AF	Vibrant® French Gold
	BN	Vibrant® Brushed Nickel
	BS	Brushed Stainless
	BV	Vibrant® Brushed Bronze
	BL	Matte Black
	2MB	Vibrant® Brushed Moderne Brass
	TT	Vibrant Titanium
	BGP	Brushed Graphite

KOHLER®

Contemporary 12" grab bar
K-14560

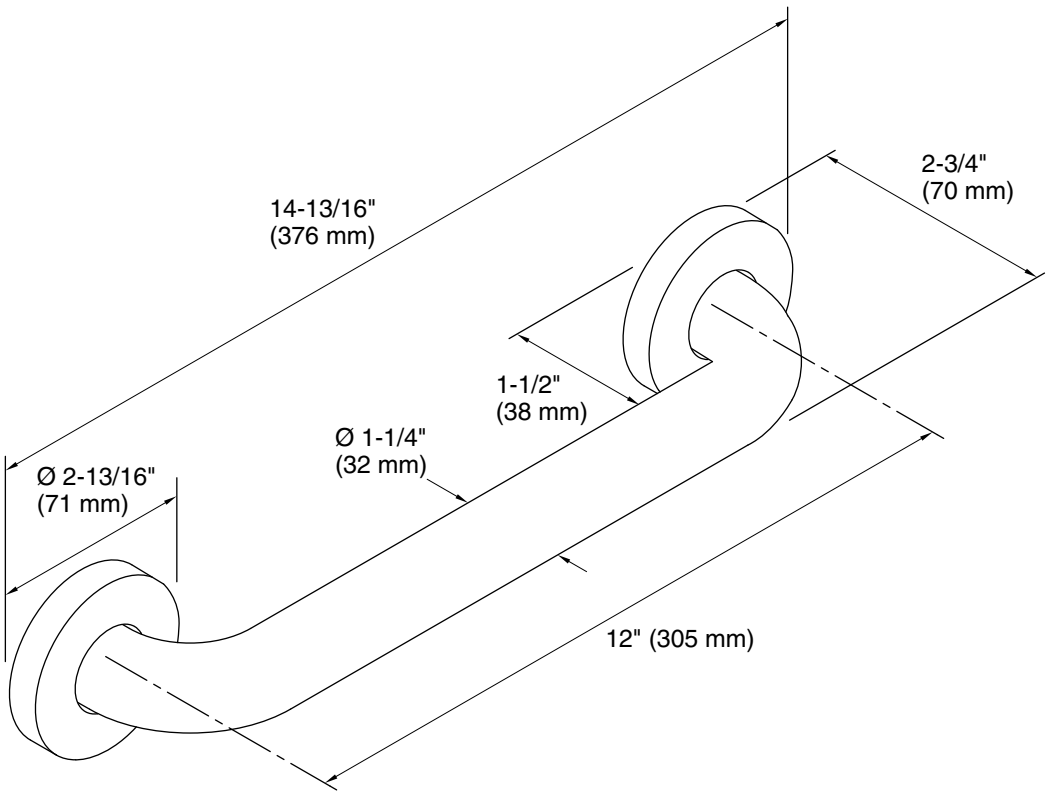

Technical Information

All product dimensions are nominal.

Material: Metal

Notes

Measure your actual product for roughing-in details.

WARNING: Risk of personal injury. The wall plates on the grab bar must be mounted to a brace between the wall studs. This will ensure that the weight of the user is adequately supported.

ADA compliant when installed to the specific requirements of these regulations.