Clearflo

brass tile-in drain (drain body not included)

K-22665

Features

- Removable grid plate
- Drain body not included
- Brass construction drain throat
- Installation screws included

Material

- KOHLER finishes resist corrosion and tarnishing

Installation

- Through-the-floor tile-in installation

Recommended Products/Accessories

K-23726 Drain treatment



Codes/Standards

ASME A112.18.2/CSA B125.2

KOHLER® One-Year Limited Warranty

See website for detailed warranty information.

Available Colors/Finishes

Color tiles intended for reference only.

Color	Code	Description
	CP	Polished Chrome
	SN	Vibrant® Polished Nickel
	AF	Vibrant® French Gold
	BN	Vibrant® Brushed Nickel
	BV	Vibrant® Brushed Bronze
	BL	Matte Black
	2MB	Vibrant® Brushed Moderne Brass
	BGP	Brushed Graphite
	TT	Vibrant Titanium
	DR	Deep Bronze

Clearflo

brass tile-in drain (drain body not included)

K-22665

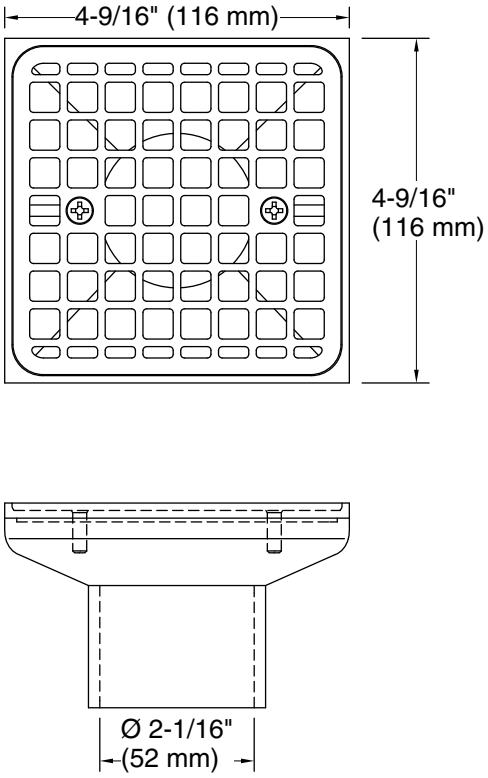

Technical Information

All product dimensions are nominal.

Material: Brass

Notes

Install this product according to the installation instructions.