Cad Ref: E:\2019\KR\RAVEN\006.Raven_03.07.2019\RMB111812-SW-B (S)(Rev3)(Sig).Dwg

Note : -
1. All the dimensions are in Inches. Metric units are in parentheses
2. Material: HDPE.
3. Tolerances may vary due to temperature ±3/16".
4. Refer Sigma QIP Doc.No : QA/QIP/MCC for manufacturing and inspection procedure.
5 I Beam at Meter Box Base, below corrugation, provide greater side load support.
6. Mouse Hole each end, pipe entry and exit. 41/2" High x 3" across.
7. Flat base, Flange under lid area,under each corrugation(see page Bearing Area)
8. 1118 has 3 corrugations, each side, for greater side load support.
9. Half inch Wall thickness, even at bottom of box.

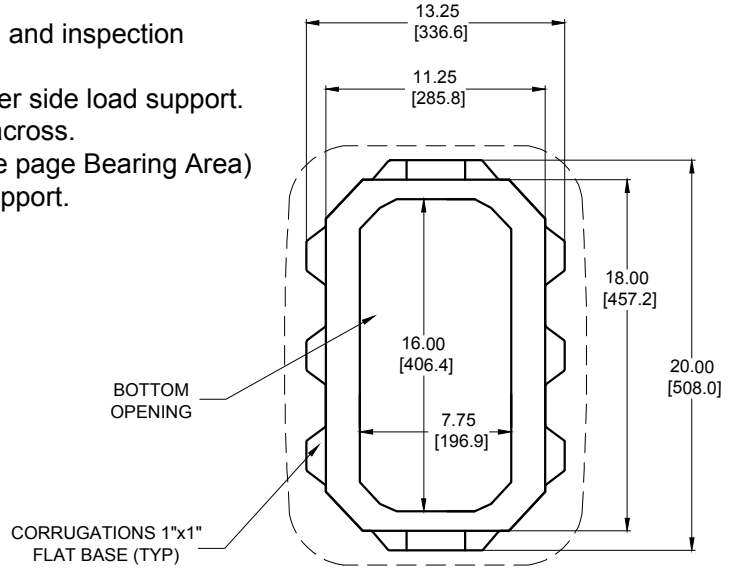

BOTTOM VIEW

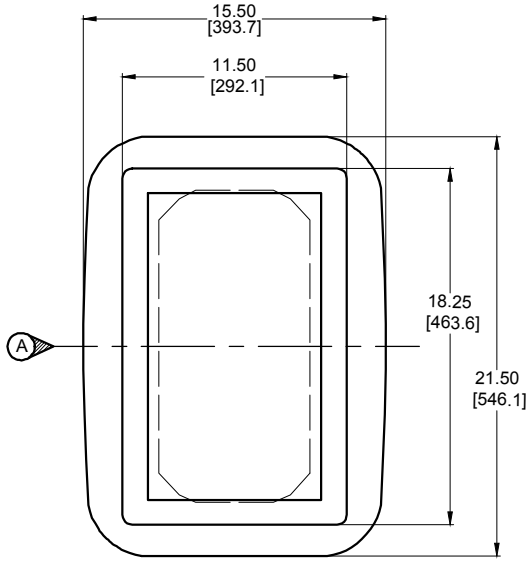

TOP VIEW

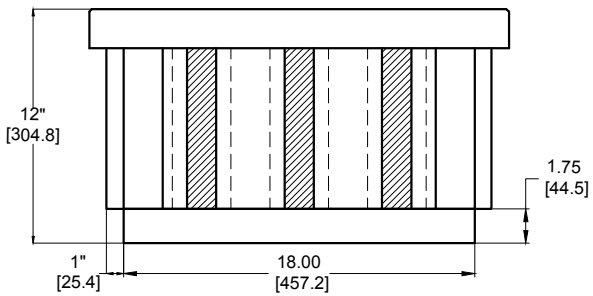

SIDE ELEVATION

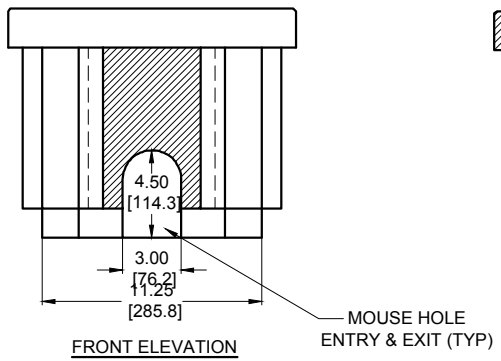

FRONT ELEVATION

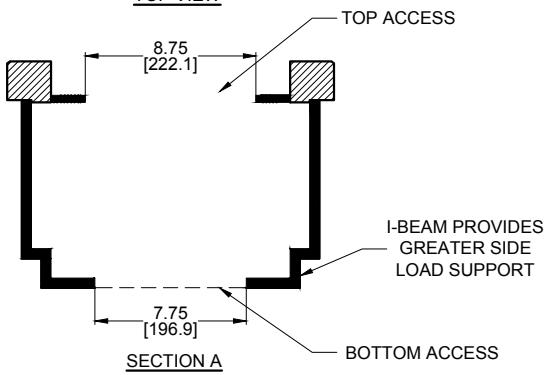

SECTION A

BY RECEIVING THIS DRAWING THE RECEPIENT AGREES THAT THIS DRAWINGS AND ITS CONTENTS REMAIN THE SOLE PROPERTY OF SIGMA CORPORATION. THIS DRAWING IS RECEIVED IN CONFIDENCE AND WILL NOT BE REPRODUCED TO SIGMA'S DETRIMENT. THIS DRAWING IS LOANED SUBJECT TO RETURN ON DEMAND.

RELEASED FOR PATTERN PRODUCTION DRAWING
DATE:- 03.07.2019
SREENIVASA RAO

Rev	Date	Revision Record	Prepared by	Approved by

RADIUS: ±.030 , MACHINED: . XX±.015

All Radii & Fillets to be 0.12" (3mm) unless otherwise specified
All Draft angles to be 2° unless otherwise specified on drawing

Product Group :- **MCC**

Coating :- ----------

Product Description- **11x18x12 RAVEN METER BOX WITH "STRAIGHT WALL" BLACK INTERIOR**

Drawing Number :- **RMB111812-SW-B** | Rev :- **3**

SIGMA™
CREAM RIDGE, NEW JERSEY

DATE : 10.30.2014	DRAWN BY : PB / EDCT
DRAWING FOR: SUBMITTAL	CHECKED BY : NS / MSK
SCALE: NTS / SHEET NO: 1 OF 1	APPROVED BY : SR1