1341 Hill Rd.
Houston, TX 77039

Office: 281.590.0190
Fax: 281-590.1415

WOI®

WELDING OUTLETS, INC.

Domestic manufacturer of quality branch connections and specialty engineered products.

www.woihouston.com

(24hr) Emergency Service
Toll Free: 1.888.610.0777

CATALOG

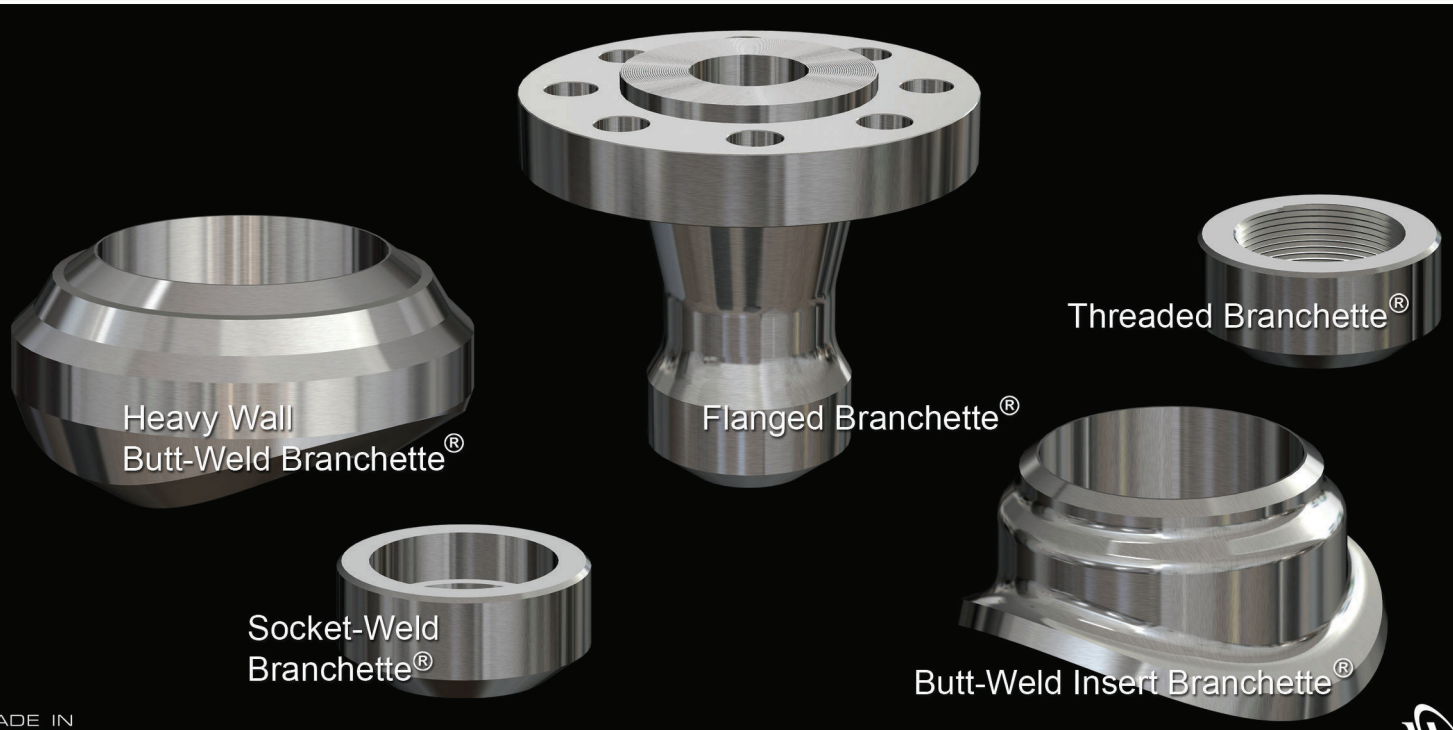

MADE IN U. S. A.

ISO 9001 CERTIFIED, PED CERTIFIED, CANADIAN REGISTERED IN ALL PROVINCES, WBENC

WBEA Women's Business Enterprise Alliance

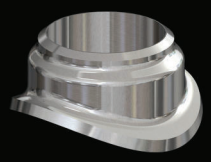
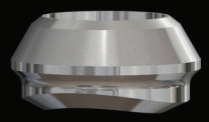
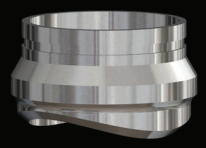

WOI®
WELDING OUTLETS, INC.

Worldwide Innovator in Branch Connections

Welding Outlets, Inc. (WOI) is an ISO, PED, and Woman-owned certified manufacturer of high pressure piping components that are available in over 40 grades of steel. The piping components of our main manufacture are known in the ASME code as "Branch Connections". A wide-range of industries use the branch connections we produce. These industries include pipeline, refinery/chemical, power plants, shipbuilding as well as those industries that process food, beverages, pulp and paper, and pharmaceuticals.

Integrally Reinforced Branch Connections designed and manufactured by WOI are known as Branchettes®. There are existing designs in four families. These families consist of the Butt-Weld Branchette® (BWB), Insert Branchette® (BIB), Socket-Weld Branchette® (SWB), and Threaded Branchette® (THB). The Butt-Weld Branchette® is available in branch pipe sizes up to nominal 72 inch, the Insert Branchette® is available in branch pipe sizes up to nominal 48 inch, and the Socket-Weld and Threaded Branchette® are available in branch pipe sizes up to 4 inch. Larger branch sizes than those listed can be designed and manufactured to match any standard or specified wall thickness. All four families are provided in all grades of alloy, carbon, chrome and stainless forging steels.

The Butt-Weld Branchette® is generally used for normal pipe branch connections where an outside diameter fit to the run pipe is required. The Insert Branchette® is used in higher stress header connections where an exceptionally smooth outside and inside transition contour of the run pipe and the ease to radiograph the attachment weld is required. The Socket-Weld and Threaded Branchettes® are generally used in vents, drains, and instrumentation piping. All four families of Branchettes® can be oriented during installation in such a way that they can form a 45°, 60°, and 90° intersection when specified, as well as installed hillside, on elbows, and caps.

As shown in the results of our proof test reports, all four families of the Branchette® restore 100% of the run pipe to its original pressure retaining strength, thus meeting and/or exceeding the requirements of the Piping and Vessel Codes.

This extensive testing program covers a large range of run and branch pipe sizes and materials. Using code specified "reasonable interpolation" the range is extended even further.

WOI engineering techniques and design philosophy for Integrally Reinforced Branch Connections justifies the prudent piping or vessel designer, engineer, or fabricator in his choice of our products. In choosing Welding Outlets, Inc. (WOI) you choose a safe and conservative design, proven to be within the rules and guidelines as set forth in the Piping and Vessel Codes.

WOI BURST TEST PROGRAM

Unless specified otherwise, integrally reinforced branch outlet fittings manufactured by WOI will be designed in accordance with MSS SP-97, ASME B31.1, and B31.3.

Integrally Reinforced branch outlet fittings designed in accordance with MSS SP-97 are proprietary in nature. For example, for butt weld branch connections, SP-97 standardizes the “A” dimension, the outlet bevels, the minimum inlet bevel, and the maximum radial gap at the inlet. Therefore, with exception to the fitting’s height, two manufacturers can produce a fitting of identical nominal size and rating that are vastly different in dimensions.

WOI has conducted an extensive proof test program. The focus of our Branchette® proof test program was to demonstrate that our fitting will restore the header pipe back to its original pressure retaining strength and that our fitting is capable of doing so with one of the lowest weld metal volume requirements in the industry.

WOI’s proof test reports are readily available for your review.

MSS SP-97 was first published in June 1987, before then other manufacturers used ASME B16.9 not MSS SP-97 as a means to qualify their branch connections. The problem with using B16.9 for integrally reinforced branch connection burst tests is the allowance of connecting heavier wall pipe to the test fitting. The philosophy of B16.9 is to test the fitting and not the pipe connected to it. Therefore you can use Schedule 80 or heavier pipe when testing a Schedule 40 or Schedule 10 fitting, and the test pressure would be calculated based on the wall thickness of the test fitting. When testing integrally reinforced branch connections, the use of a heavier schedule run pipe adds strength to the branch intersection and therefore does not test the branch fittings capability to restore the original strength of the proper schedule run pipe. MSS SP-97 requires that the run and branch pipes be the same schedule as the test fitting marking calls for. This provides for more realistic test of a branch fitting than the B16.9 test, but is more difficult to pass. You are not only testing the outlet fitting, but are pushing the pipe to its extreme limits.

TABLE OF CONTENTS

INFORMATION NEEDED FOR BRANCH OUTLET FITTINGS (WOI BRANCHETTES®)

1. HEADER NOMINAL PIPE SIZE OR ACTUAL DIAMETER
2. HEADER WALL THICKNESS (MINIMUM OR NOMINAL)
3. BRANCH NOMINAL PIPE SIZE OR ACTUAL DIAMETER
4. BRANCH CLASS, SCHEDULE, OR WALL THICKNESS (MINIMUM OR NOMINAL)
5. BRANCH OUTLET FITTING TYPE
    - a. BUTT WELD BRANCHETTE®
    - b. SOCKET WELD BRANCHETTE®
    - c. THREADED BRANCHETTE®
    - d. FLANGED BRANCHETTE®
    - e. INSERT BRANCHETTE®
        - i. BUTT WELD, SOCKET WELD, THREADED, OR FLANGED
    - f. ELBOW BRANCHETTE®
        - i. BUTT WELD, SOCKET WELD, THREADED, OR FLANGED
    - g. LATERAL BRANCHETTE®
        - i. BUTT WELD, SOCKET WELD, THREADED, OR FLANGED
    - h. NIPPLE BRANCHETTE®
        - i. PLAIN OR THREADED
        - ii. 90°, 45°, OR ELBOW APPLICATION
        - iii. HEIGHT
6. BRANCH OUTLET FITTING MATERIAL GRADE
7. DESIGN CONDITIONS (IF REINFORCEMENT CALCULATIONS ARE REQUIRED)
    - a. DESIGN CODE AND EDITION (IF NOT LATEST EDITION)
    - b. DESIGN PRESSURE
    - c. DESIGN TEMPERATURE
    - d. CORROSION ALLOWANCE (IF APPLICABLE)
    - e. DESIGN FACTOR (IF APPLICABLE)
8. SPECIAL DIMENSIONS, NOTES, OR MATERIAL REQUIREMENTS

BUTT WELD BRANCHETTE®

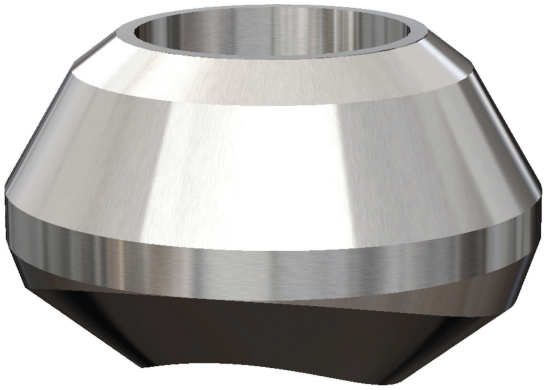

SIZE : 1/8 - 72 **IDENTIFICATION** : STANDARD, X-STG, SCH.160, XX-STG

MATERIAL : ALL ASTM / ASME MATERIAL GRADES

PRODUCT CONFORMITY : MSS SP-97, ASME B16.25, ASME B31.1, ASME B31.3

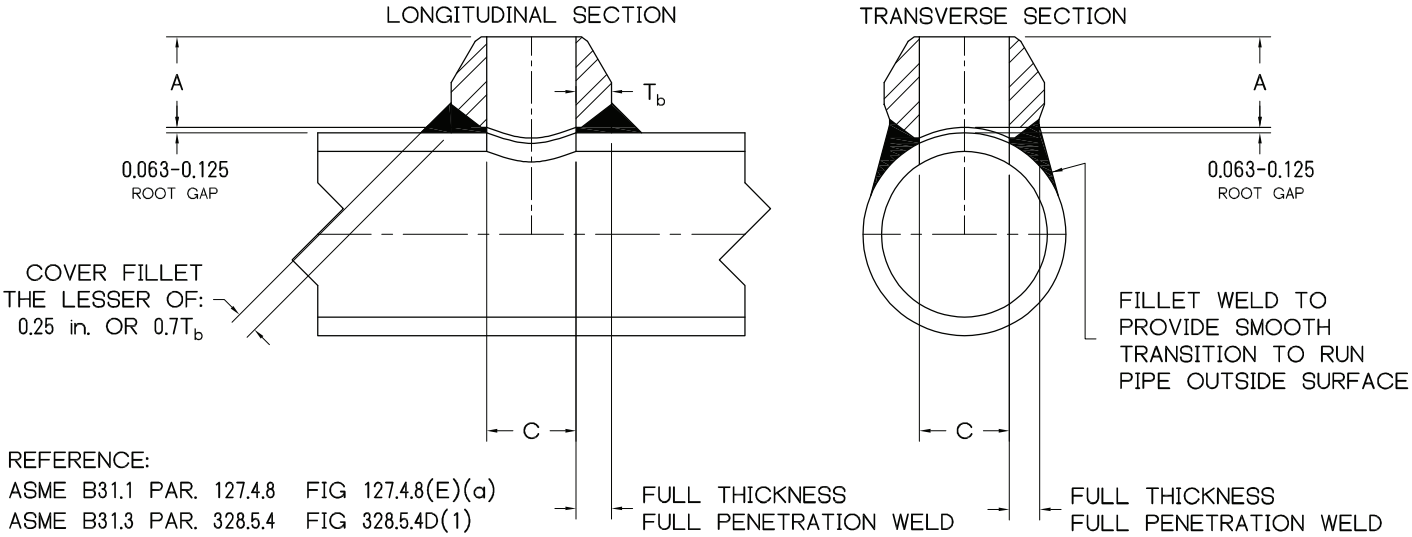

REFERENCE:
ASME B31.1 PAR. 127.4.8 FIG 127.4.8(E)(a)
ASME B31.3 PAR. 328.5.4 FIG 328.5.4D(1)

DIMENSIONS AND CONSOLIDATIONS

NPS	STANDARD				X-STG				SCH.160				XX-STG			
	A	C	WT	CONSOLIDATION	A	C	WT	CONSOLIDATION	A	C	WT	CONSOLIDATION	A	C	WT	CONSOLIDATION
1/8	0.62	0.269	0.08	36 - 1/8	0.62	0.215	0.10	36 - 1/8								
1/4	0.62	0.364	0.08	1/4 36 - 3/8	0.62	0.302	0.10	36 - 1/4								
3/8	0.75	0.493	0.10	1/2 - 3/8 36 - 3/4	0.75	0.423	0.12	3/8 36 - 1/2								
1/2	0.75	0.622	0.12	1 - 1/2 36 - 1 1/4	0.75	0.546	0.12	3/4 - 1/2 36 - 1	1.12	0.464	0.22	1/2 36 - 3/4	1.12	0.252	0.26	36 - 1/2
3/4	0.88	0.824	0.22	2 - 3/4 36 - 2 1/2	0.88	0.742	0.24	1 1/2 - 3/4 36 - 2	1.25	0.612	0.38	1 - 3/4 36 - 1 1/4	1.25	0.434	0.41	3/4 36 - 1
1	1.06	1.049	0.32	1 3 1/2 - 1 1/4 36 - 4	1.06	0.957	0.38	1 3 - 1 1/4 36 - 3 1/2	1.50	0.815	0.60	2 - 1 36 - 2 1/2	1.50	0.599	0.65	1 36 - 1 1/4
1 1/4	1.25	1.380	0.72	1 1/4 2 - 1 1/2 6 - 2 1/2 36 - 8	1.25	1.278	0.74	1 1/4 4 - 1 1/2 36 - 5	1.75	1.160	1.14	1 1/4 4 - 1 1/2 36 - 5	1.75	0.896	1.20	2 1/2 - 1 1/4 36 - 3
1 1/2	1.31	1.610	0.72	1 1/2 3 - 2 8 - 3 1/2 36 - 10	1.31	1.500	0.80	1 1/2 2 1/2 - 2 8 - 3 36 - 10	2.00	1.338	2.00	2 1/2 - 1 1/2 6 - 3 36 - 8	2.00	1.100	2.20	2 1/2 - 1 1/2 3 1/2 - 3 36 - 4
2	1.50	2.067	1.18	2 3 - 2 1/2 6 - 3 1/2 16 - 8 36 - 18	1.50	1.939	1.38	2 2 1/2 4 - 3 14 - 5 36 - 16	2.18	1.687	2.32	2 3 - 2 1/2 10 - 3 1/2 36 - 12	2.18	1.503	2.45	2 1/2 - 2 3 1/2 - 3 36 - 4

NOTES : 1. LARGER SIZES AND SPECIAL DIMENSIONS AVAILABLE 2. T_b AVAILABLE UPON REQUEST

3. WEIGHTS BASED ON CARBON STEEL

LISTED CONSOLIDATIONS ARE FOR STAINLESS-CHROME-ALLOY BRANCHETTES® FOR A105 CONSOLIDATIONS SEE PAGE 34

BUTT WELD BRANCHETTE®

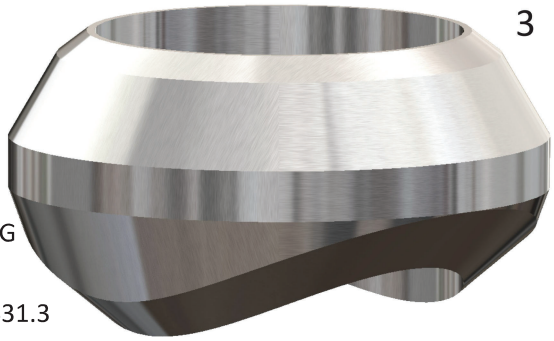

SIZE : 1/8 - 72 **IDENTIFICATION :** STANDARD, X-STG, SCH.160, XX-STG

MATERIAL : ALL ASTM / ASME MATERIAL GRADES

PRODUCT CONFORMITY : MSS SP-97, ASME B16.25, ASME B31.1, ASME B31.3

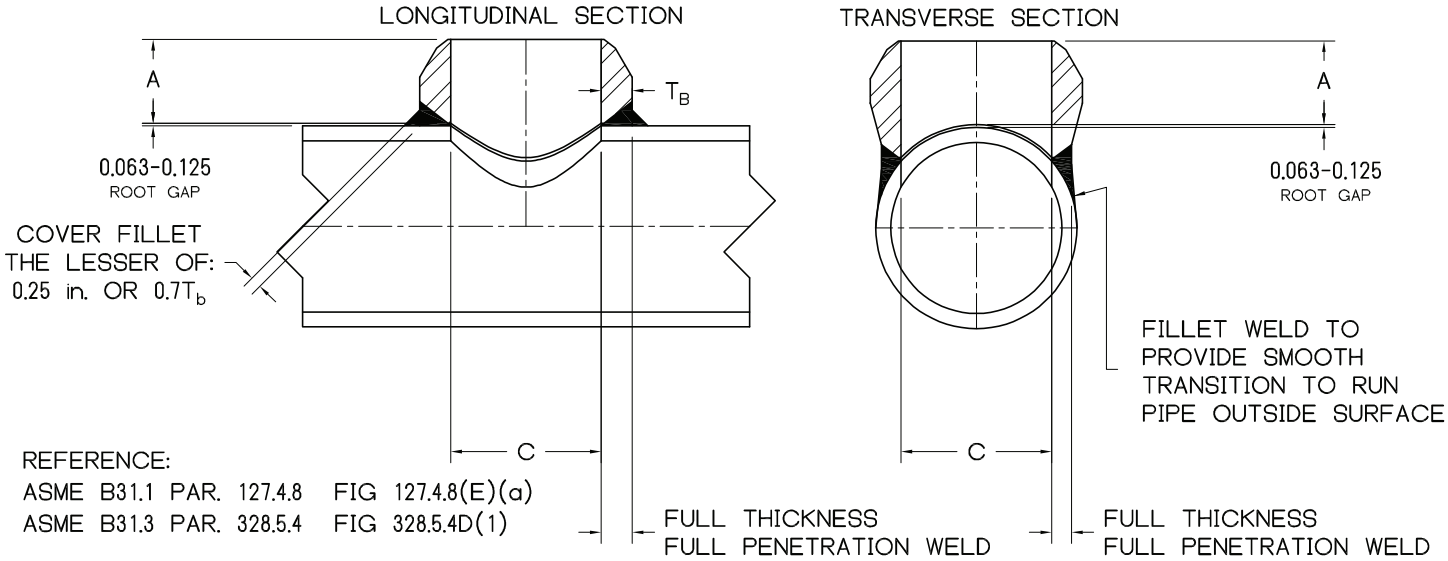

DIMENSIONS AND CONSOLIDATIONS																
NPS	STANDARD				X-STG				SCH.160				XX-STG			
	A	C	WT	CONSOLIDATION	A	C	WT	CONSOLIDATION	A	C	WT	CONSOLIDATION	A	C	WT	CONSOLIDATION
2 1/2	1.62	2.469	2.20	2 1/2 3 1/2 - 3 5 - 4 12 - 6 24 - 14 36 - 26	1.62	2.323	2.55	2 1/2 3 1/2 - 3 6 - 4 24 - 8 36 - 26	2.44	2.125	2.95	2 1/2 3 5 - 3 1/2 16 - 6 36 - 18	2.44	1.771	3.20	4 - 2 1/2 10 - 5 36 - 12
3	1.75	3.068	2.68	3 4 - 3 1/2 6 - 5 14 - 8 36 - 16	1.75	2.900	3.28	3 4 - 3 1/2 6 - 5 10 - 8 32 - 12 36 - 34	2.88	2.624		ORDER TO EXACT HEADER SIZE	2.88	2.300		ORDER TO EXACT HEADER SIZE
3 1/2	1.88	3.548	3.23	SEE NOTE 2 4 5 6 8 16 - 10 50 - 18	1.88	3.364	4.05	SEE NOTE 2 4 5 6 10 - 8 22 - 12 44 - 24								
4	2.00	4.026	3.78	4 5 6 10 - 8 20 - 12 64 - 22	2.00	3.826	4.86	4 5 6 10 - 8 22 - 12 56 - 24	3.31	3.438		ORDER TO EXACT HEADER SIZE	3.31	3.152		ORDER TO EXACT HEADER SIZE

NOTES : 1. LARGER SIZES AND SPECIAL DIMENSIONS AVAILABLE

2. FOR FULL SIZE NPS 3 1/2, A = 2"

3. T_b AVAILABLE UPON REQUEST

4. WEIGHTS BASED ON CARBON STEEL

LISTED CONSOLIDATIONS ARE FOR STAINLESS-CHROME-ALLOY BRANCHETTES® FOR A105 CONSOLIDATIONS SEE PAGE 34

BUTT WELD BRANCHETTE®

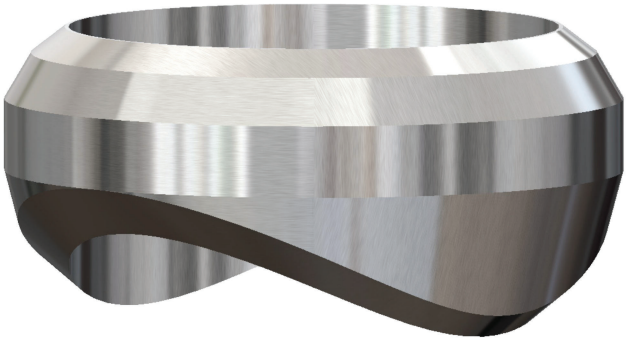

SIZE : 1/8 - 72 **IDENTIFICATION** : STANDARD, X-STG, SCH.160, XX-STG
MATERIAL : ALL ASTM / ASME MATERIAL GRADES
PRODUCT CONFORMITY : MSS SP-97, ASME B16.25, ASME B31.1, ASME B31.3

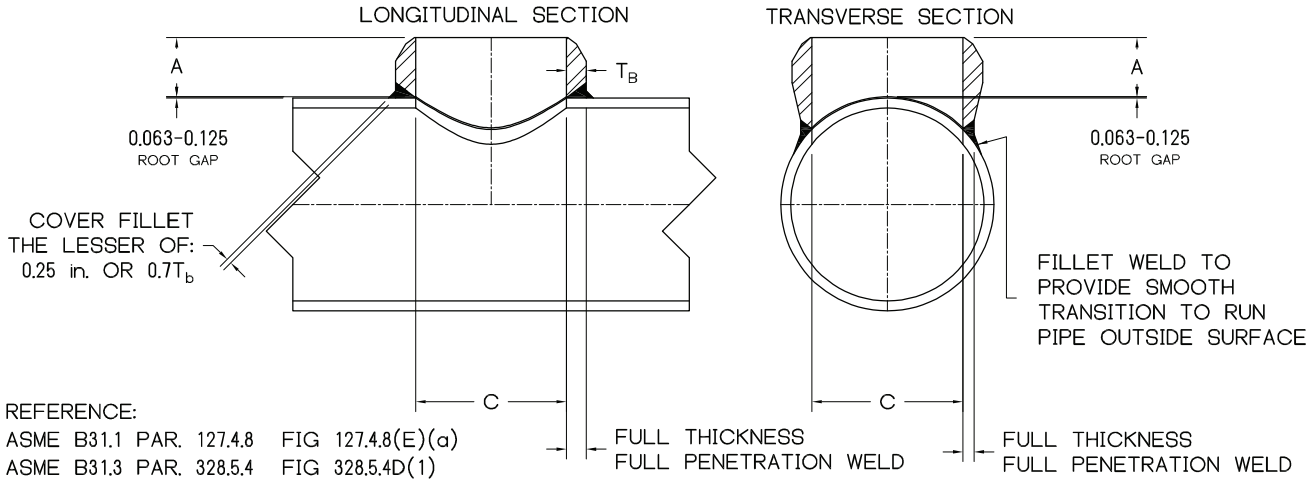

DIMENSIONS AND CONSOLIDATIONS												
NPS	STANDARD			X-STG			SCH.160			XX-STG		
	A	C		A	C		A	C		A	C	
5	2 1/4	5.047	ORDER TO EXACT HEADER SIZE	2 1/4	4.813	ORDER TO EXACT HEADER SIZE	3 11/16	4.313	ORDER TO EXACT HEADER SIZE	3 11/16	4.063	ORDER TO EXACT HEADER SIZE
6	2 3/8	6.065		3 1/16	5.761		4 1/8	5.187		4 1/8	4.897	
8	2 3/4	7.981		3 7/8	7.625		REFER TO WOI HEAVY WALL BRANCHETTE CHART	6.813		REFER TO WOI HEAVY WALL BRANCHETTE CHART	6.875	
10	3 1/16	10.020		3 11/16 NOTE 2	9.750			8.500			8.750	
12	3 3/8	12.000		4 1/16 NOTE 3	11.750			10.126			10.750	
14	3 1/2	13.250		3 15/16 NOTE 4	13.000			11.188				
16	3 11/16	15.250		4 3/16 NOTE 5	15.000			12.812				
18	3 13/16 NOTE 6	17.250		4 3/8 NOTE 6	17.000			14.438				
20	4 NOTE 7	19.250		4 11/16 NOTE 7	19.000			16.062				
22	4 3/8	21.250		5 1/8	21.000			17.750				
24	4 9/16 NOTE 8	23.250		5 1/2	23.000			19.312				

NOTES : 1. LARGER SIZES AND SPECIAL DIMENSIONS AVAILABLE
2. FOR FULL SIZE NPS 10 X-STG, A = 3 1/2
3. FOR FULL SIZE NPS 12 X-STG, A = 3 15/16
4. FOR FULL SIZE NPS 14 X-STG, A = 4 1/8
5. FOR FULL SIZE NPS 16 X-STG, A = 4 7/16
6. FOR FULL SIZE NPS 18 STD A = 4 1/16 / X-STG A = 4 11/16
7. FOR FULL SIZE NPS 20 STD A = 4 5/8 / X-STG A = 5
8. FOR FULL SIZE NPS 24 STD, A = 5 3/8

HEAVY WALL BUTT WELD BRANCHETTE®

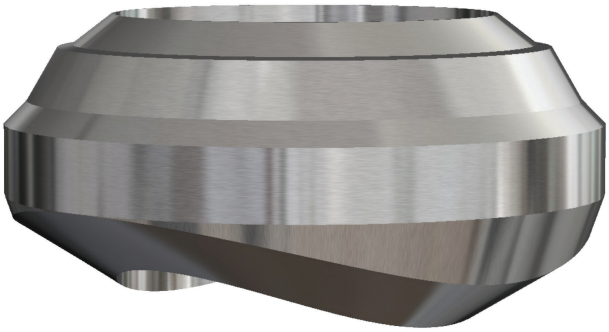

SIZE : 3 - 24 **IDENTIFICATION** : GREATER THAN X-STG

MATERIAL : ALL ASTM / ASME MATERIAL GRADES

PRODUCT CONFORMITY : MSS SP-97, ASME B16.25, ASME B31.1, ASME B31.3

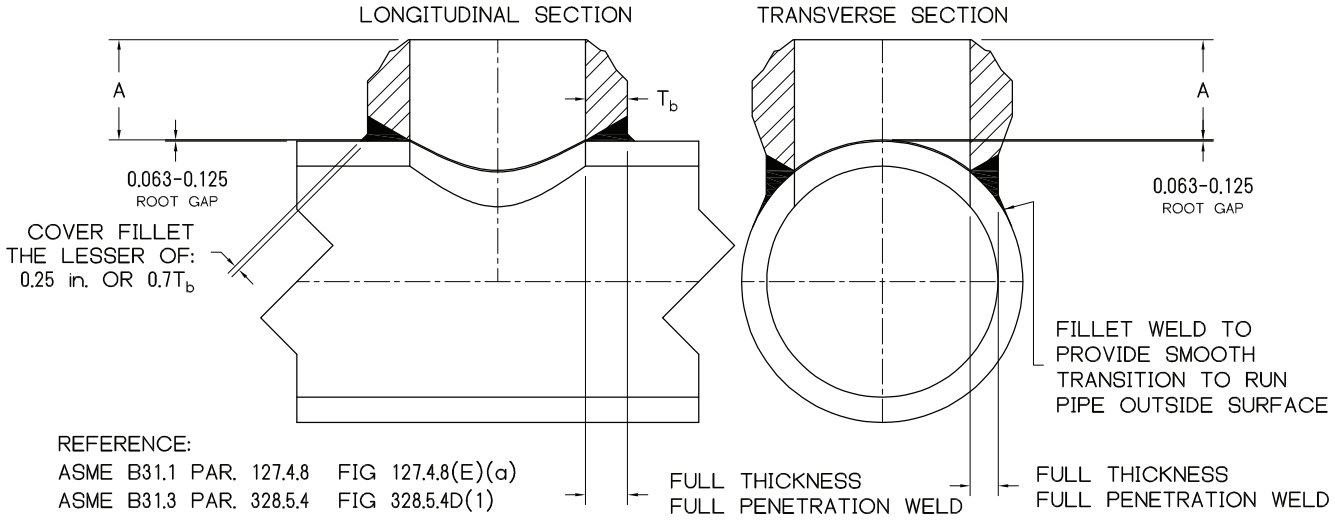

"A" DIMENSIONS BASED ON HEADER WALL THICKNESS										
NPS	**3/4**	**1**	**1 1/4**	**1 1/2**	**1 3/4**	**2**	**2 1/4**	**2 1/2**	**2 3/4**	**3**
3	2 7/8	3 1/4	3 3/8	3 5/8	4 1/8	4 9/16	5	5 1/2	5 7/8	6 1/16
3 1/2	3 1/8	3 1/4	3 7/16	3 3/4	4 3/16	4 5/8	5 1/16	5 9/16	6	6 5/16
4	3 5/16	3 3/8	3 1/2	3 7/8	4 5/16	4 3/4	5 3/16	5 5/8	6 1/8	6 9/16
5	3 3/4	3 3/4	4	4 1/4	4 3/4	5 1/4	5 3/4	6 1/4	6 5/8	7 3/16
6	4 1/8	4 3/8	4 1/2	4 11/16	5 1/4	5 3/4	6 1/4	6 3/4	7 1/4	7 13/16
8	4 3/16	4 5/8	4 7/8	5 3/16	5 3/4	6 3/8	6 15/16	7 1/2	8 1/8	8 11/16
10	4 1/4	4 7/8	5	5 5/16	5 15/16	6 9/16	7 3/16	7 13/16	8 7/16	9 1/16
12	4 3/8	5 1/8	5 3/8	5 11/16	6 5/16	6 15/16	7 9/16	8 3/16	8 13/16	9 7/16
14	4 1/2	5 1/4	5 1/2	5 13/16	6 5/16	6 15/16	7 9/16	8 3/16	8 13/16	9 7/16
16	4 11/16	5 7/8	6	6 7/16	6 5/8	7 1/4	7 7/8	8 1/2	9 1/8	9 3/4
18	5 1/8	6 1/2	6 1/2	6 1/2	6 13/16	7 7/16	8 1/4	8 13/16	9 7/16	10 1/16
20	5 5/8	6 3/4	7	7 9/16	7 13/16	8 1/8	8 11/16	9 1/4	9 15/16	10 3/8
24	6 1/2	7 5/8	8	8 3/4	9	9 13/16	10 1/2	11	12 9/16	10 11/16

THE CORRECT WAY TO READ THE HEAVY WALL CHART IS AS FOLLOWS, USING THE EXAMPLE 24 1.625 NW X 12 SCH.80 BUTT-WELD BRANCHETTE. THE RUN PIPE WALL THICKNESS IS GREATER THAN 1.500" AND LESS THAN 1.750", THEREFORE, USE THE “A” DIMENSION FOR THE 12” BRANCH SIZE UNDER THE 1 3/4” RUN WALL THICKNESS COLUMN. THE “A” DIMENSION FOR THIS BWB IS 6 5/16".

NOTES : 1. LARGER SIZES AND SPECIAL DIMENSIONS AVAILABLE

BUTT WELD
LATERAL BRANCHETTE®

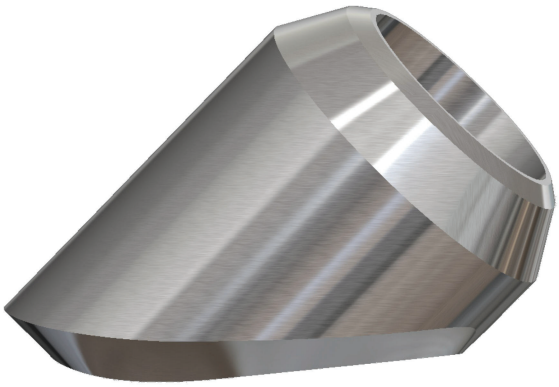

SIZE : 1/4 - 2 **IDENTIFICATION** : STANDARD, X-STG, SCH.160, XX-STG

MATERIAL : ALL ASTM / ASME MATERIAL GRADES

PRODUCT CONFORMITY : MSS SP-97, ASME B16.25, ASME B31.1, ASME B31.3

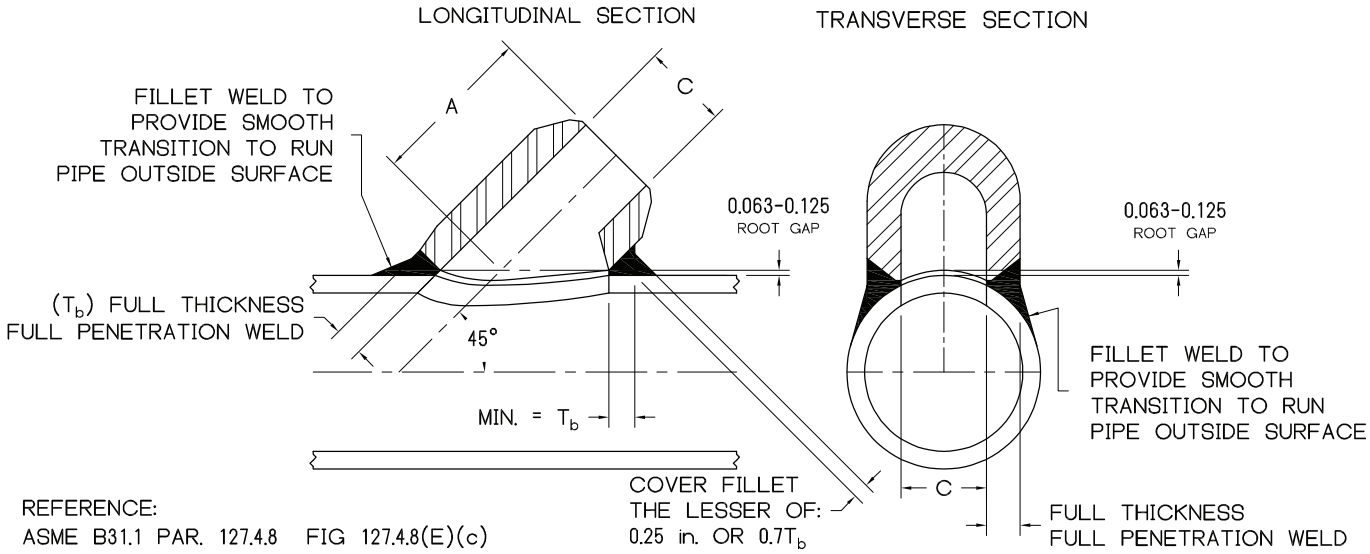

DIMENSIONS AND CONSOLIDATIONS

NPS	STANDARD			X-STG			SCH.160			XX-STG		
	A	C	CONSOLIDATION	A	C	CONSOLIDATION	A	C	CONSOLIDATION	A	C	CONSOLIDATION
1/4	1 9/16	0.364	36 - 1/4	1 9/16	0.302	36 - 1/4						
3/8	1 9/16	0.493	36 - 3/8	1 9/16	0.423	36 - 3/8						
1/2	1 9/16	0.622	1/2 36 - 3/4	1 9/16	0.546	1/2 36 - 3/4	1 3/4	0.464	36 - 1/2	1 3/4	0.252	36 - 1/2
3/4	1 13/16	0.824	1 - 3/4 36 - 1 1/4	1 13/16	0.742	3/4 36 - 1	1 15/16	0.612	36 - 3/4	1 15/16	0.434	36 - 3/4
1	2 3/16	1.049	1 1 1/2 - 1 1/4 36 - 2	2 3/16	0.957	1 1/2 - 1 36 - 2	2 3/8	0.815	1 36 - 1 1/4	2 3/8	0.599	36 - 1
1 1/4	2 3/16	1.380	1 1/2 - 1 1/4 3 - 2 36 - 3 1/2	2 3/16	1.278	1 1/4 2 1/2 - 1 1/2 36 - 3	2 7/8	1.160	2 - 1 1/4 36 - 2 1/2	2 7/8	0.896	1 1/4 36 - 1 1/2
1 1/2	2 9/16	1.610	2 - 1 1/2 4 - 2 1/2 36 - 5	2 9/16	1.500	2 - 1 1/2 4 - 2 1/2 36 - 5	3 1/4	1.338	1 1/2 3 - 2 36 - 3 1/2	3 1/4	1.100	2 - 1 1/2 36 - 2 1/2
2	2 13/16	2.067	2 2 1/2 3 1/2 - 3 6 - 4 36 - 8	2 13/16	1.939	2 3 - 2 1/2 6 - 3 1/2 36 - 8	3 11/16	1.687	2 1/2 - 2 5 - 3 36 - 6	3 11/16	1.503	2 4 - 2 1/2 36 - 5

NOTES : 1. LARGER SIZES AND SPECIAL DIMENSIONS AVAILABLE 2. T_b AVAILABLE UPON REQUEST

BUTT WELD
ELBOW BRANCHETTE®

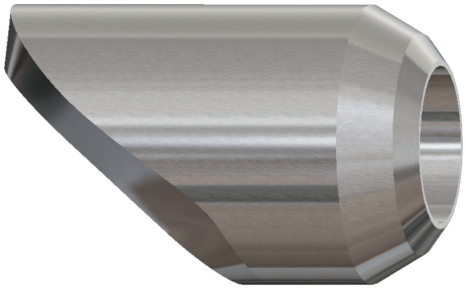

SIZE : 1/4 - 2 **IDENTIFICATION** : STANDARD, X-STG, SCH.160, XX-STG
MATERIAL : ALL ASTM / ASME MATERIAL GRADES
PRODUCT CONFORMITY : MSS SP-97, ASME B16.25, ASME B31.1, ASME B31.3

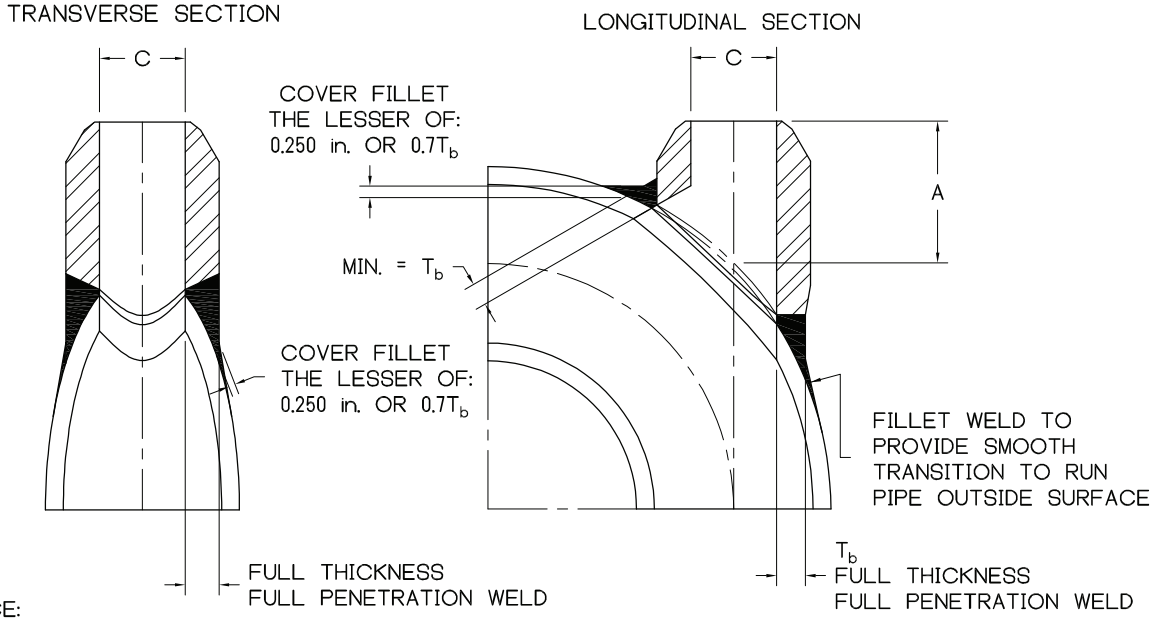

REFERENCE:
ASME B31.1 PAR. 127.4.8 FIG 127.4.8(E)(c)

COVER FILLET NOTE: The minimum cover weld throat thickness applies when the angle between the branch fitting groove weld face and the run pipe surface is less than 135 deg. For areas where the angle between the groove weld face and the run pipe surface is 135 deg or greater, the cover weld may transition to nothing. Cover fillet shall provide a smooth transition to run pipe.

DIMENSIONS AND CONSOLIDATIONS												
NPS	STANDARD			X-STG			SCH.160			XX-STG		
	A	C	CONSOLIDATION	A	C	CONSOLIDATION	A	C	CONSOLIDATION	A	C	CONSOLIDATION
1/2	1 3/16	0.622	36 - 3/4	1 3/16	0.546	36 - 3/4	1 9/16	0.464	36 - 3/4	1 9/16	0.252	36 - 3/4
3/4	1 3/8	0.824	36 - 1	1 3/8	0.742	36 - 1	1 3/4	0.612	36 - 1	1 3/4	0.434	36 - 1
1	1 11/16	1.049	36 - 2	1 11/16	0.957	36 - 2	2 1/8	0.815	36 - 2	2 1/8	0.599	36 - 2
1 1/4	2 1/16	1.380	36 - 2	2 1/16	1.278	36 - 2	2 9/16	1.160	36 - 2	2 9/16	0.896	36 - 2
1 1/2	2 1/4	1.610	36 - 2	2 1/4	1.500	36 - 2	3	1.338	36 - 2	3	1.100	36 - 2
2	2 5/8	2.067	36 - 3	2 5/8	1.939	36 - 3	3 5/16	1.687	36 - 3	3 5/16	1.503	36 - 3

NOTES : 1. LARGER SIZES AND SPECIAL DIMENSIONS AVAILABLE 2. T_b AVAILABLE UPON REQUEST

SOCKET WELD BRANCHETTE®

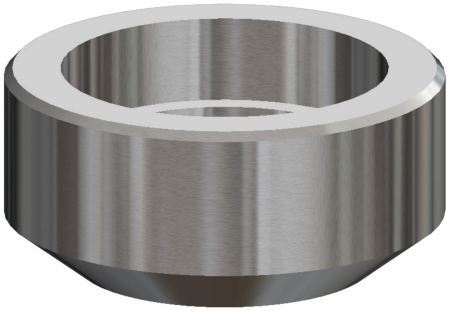

SIZE : 1/8 - 4 **CLASS** : 3000, 6000, 9000

MATERIAL : ALL ASTM / ASME MATERIAL GRADES

PRODUCT CONFORMITY : MSS SP-97, ASME B16.11, ASME B31.1, ASME B31.3

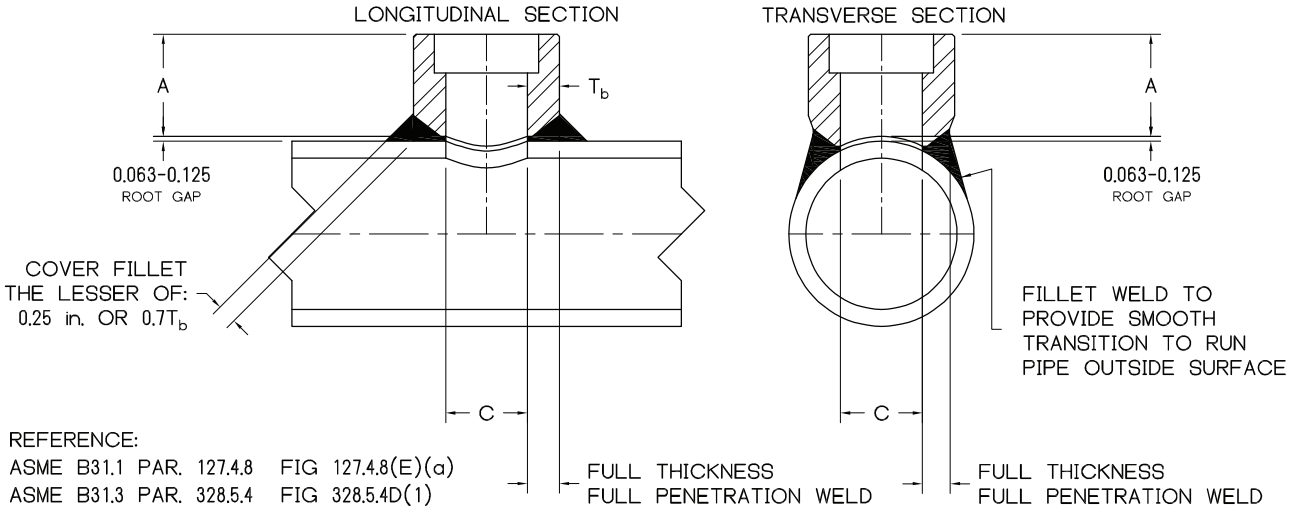

DIMENSIONS AND CONSOLIDATIONS

NPS	SOCKET DEPTH	CL.3000 (3M) RUN PIPE CORRELATION: X-STG				CL.6000 (6M) RUN PIPE CORRELATION: SCH.160				CL.9000 (9M) RUN PIPE CORRELATION: XX-STG			
		A	C	WT	CONSOLIDATION	A	C	WT	CONSOLIDATION	A	C	WT	CONSOLIDATION
1/8	0.375	3/4	0.269	0.11	36 - 1/8								
1/4	0.375	3/4	0.364	0.14	1/4 36 - 3/8								
3/8	0.375	13/16	0.493	0.14	1/2 - 3/8 36 - 3/4								
1/2	0.375	15/16	0.622	0.28	1 - 1/2 36 - 1 1/4	1 1/4	0.464	0.28	1/2 36 - 3/4	1 1/4	0.252	0.50	36 - 1/2
3/4	0.500	1 1/16	0.824	0.39	2 - 3/4 36 - 2 1/2	1 7/16	0.612	0.39	1 - 3/4 36 - 1 1/4	1 7/16	0.434	0.74	3/4 36 - 1
1	0.500	1 5/16	1.049	0.73	1 3 1/2 - 1 1/4 36 - 4	1 9/16	0.815	0.73	2 - 1 36 - 2 1/2	1 9/16	0.599	1.12	1 36 - 1 1/4
1 1/4	0.500	1 5/16	1.380	0.96	1 1/4 2 - 1 1/2 6 - 2 1/2 36 - 8	1 5/8	1.160	0.96	1 1/4 4 - 1 1/2 3 - 5 6	1 5/8	0.896	1.65	2 1/2 - 1 1/4 36 - 3
1 1/2	0.500	1 3/8	1.610	1.12	1 1/2 3 - 2 8 - 3 1/2 36 - 10	1 11/16	1.338	1.63	2 1/2 - 1 1/2 6 - 3 36 - 8	1 11/16	1.100	2.00	2 1/2 - 1 1/2 3 1/2 - 3 36 - 4
2	0.625	1 1/2	2.067	1.66	2 3 - 2 1/2 6 - 3 1/2 16 - 8 36 - 18	2	1.687	1.66	2 3 - 2 1/2 10 - 3 1/2 36 - 12	2	1.503	3.32	2 1/2 - 2 3 1/2 - 3 36 - 4

NOTES : 1. LARGER SIZES AND SPECIAL DIMENSIONS AVAILABLE
2. TYPICAL SOCKET DEPTH TOLERANCE: +.063 / - .000
3. T_b AVAILABLE UPON REQUEST
4. WEIGHTS BASED ON CARBON STEEL

LISTED CONSOLIDATIONS ARE FOR STAINLESS-CHROME-ALLOY BRANCHETTES® FOR A105 CONSOLIDATIONS SEE PAGE 34

THREADED BRANCHETTE®

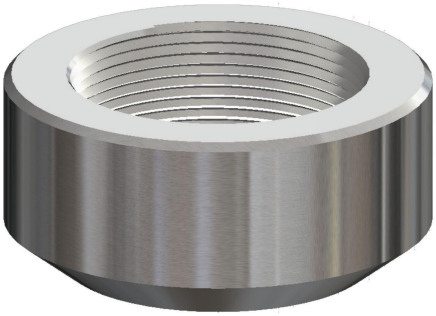

SIZE : 1/8 - 4 **CLASS** : 3000, 6000, 9000 / 10000

MATERIAL : ALL ASTM / ASME MATERIAL GRADES

PRODUCT CONFORMITY : MSS SP-97, ASME B16.11, ASME B1.20.1 (NPT), ASME B31.1, ASME B31.3

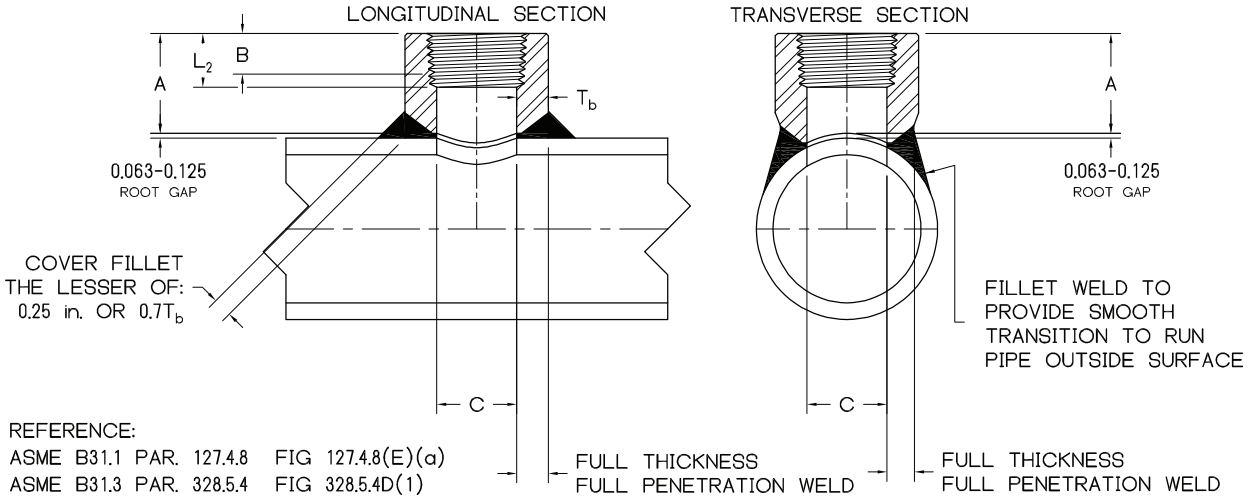

DIMENSIONS AND CONSOLIDATIONS														
NPS	SEE NOTE 2		CL.3000 (3M) RUN PIPE CORRELATION: X-STG				CL.6000 (6M) RUN PIPE CORRELATION: SCH.160				CL.9000 (9M)/CL.10000 (10M) RUN PIPE CORRELATION: XX-STG			
	B	L_2	A	C	WT	CONSOLIDATION	A	C	WT	CONSOLIDATION	A	C	WT	CONSOLIDATION
1/2	0.43	0.5337	1	0.718	0.28	1/2 1 1/2 - 3/4 36 - 2	1 1/4	0.718	0.44	1/2 1 1/2 - 3/4 36 - 2	1 1/4	0.718	0.56	1/2 1 1/2 - 3/4 36 - 2
3/4	0.50	0.5457	1 1/16	0.922	0.39	3/4 1 1/2 - 1 2 1/2 - 2 36 - 3	1 7/16	0.922	0.67	3/4 1 1/2 - 1 2 1/2 - 2 36 - 3	1 7/16	0.922	0.79	3/4 1 1/2 - 1 2 1/2 - 2 36 - 3
1	0.58	0.6828	1 5/16	1.141	0.73	1 2 - 1 1/4 4 - 2 1/2 36 - 5	1 9/16	1.141	1.12	1 2 - 1 1/4 4 - 2 1/2 36 - 5	1 9/16	1.141	1.38	1 2 - 1 1/4 4 - 2 1/2 36 - 5
1 1/4	0.67	0.7068	1 5/16	1.500	0.96	1 1/2 - 1 1/4 3 1/2 - 2 8 - 4 36 - 10	1 5/8	1.500	1.42	1 1/2 - 1 1/4 3 1/2 - 2 8 - 4 36 - 10	1 5/8	1.500	1.80	1 1/2 - 1 1/4 3 1/2 - 2 8 - 4 36 - 10
1 1/2	0.70	0.7235	1 3/8	1.734	1.12	1 1/2 2 3 1/2 - 2 1/2 10 - 4 36 - 12	1 11/16	1.734	2.17	1 1/2 2 3 1/2 - 2 1/2 10 - 4 36 - 12	1 11/16	1.734	2.30	1 1/2 2 3 1/2 - 2 1/2 10 - 4 36 - 12
2	0.75	0.7565	1 1/2	2.219	1.66	2 2 1/2 4 - 3 10 - 5 18 - 12 36 - 20	2 1/16	2.219	3.73	2 2 1/2 4 - 3 10 - 5 18 - 12 36 - 20	2 1/16	2.219	4.15	2 2 1/2 4 - 3 10 - 5 18 - 12 36 - 20

NOTES : 1. LARGER SIZES, SPECIAL DIMENSIONS AND SPECIAL THREADS AVAILABLE

2. DIMENSION B IS MINIMUM OF PERFECT THREAD. THE LENGTH OF USEFUL THREAD (B PLUS THREADS WITH FULLY FORMED ROOTS AND FLAT CRESTS) SHALL NOT BE LESS THAN L2 (EFFECTIVE LENGTH OF EXTERNAL THREADED) PER ASME B1.20.1

3. Tb AVAILABLE UPON REQUEST 4. WEIGHTS BASED ON CARBON STEEL

Listed consolidations are for Stainless-Chrome-Alloy Branchettes® For A105 Consolidations see page 34

SOCKET WELD LATERAL BRANCHETTE®

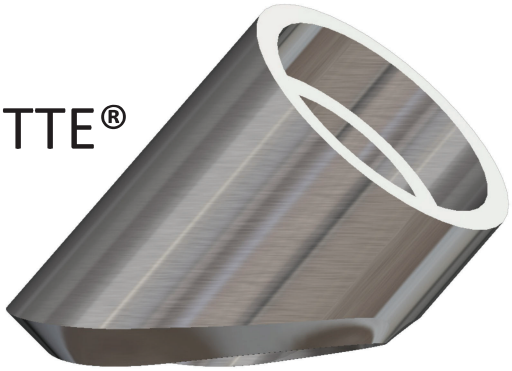

SIZE : 1/4 - 2 **IDENTIFICATION** : 3000, 6000, 9000

MATERIAL : ALL ASTM / ASME MATERIAL GRADES

PRODUCT CONFORMITY : MSS SP-97, ASME B16.11, ASME B31.1, ASME B31.3

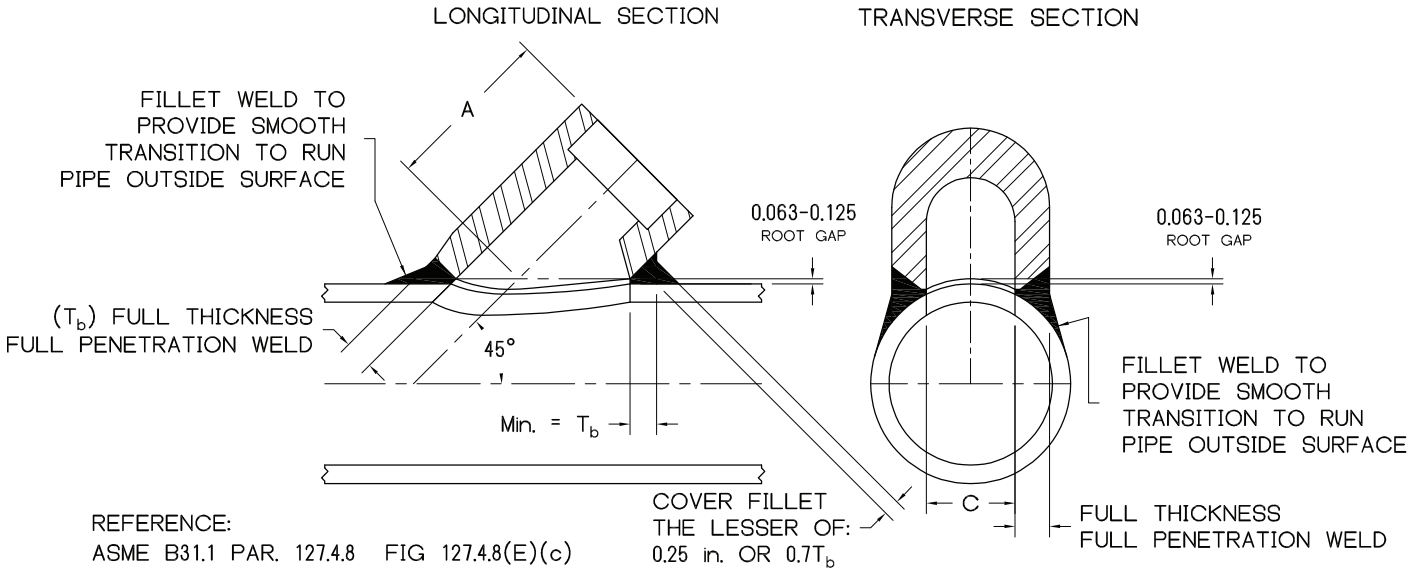

DIMENSIONS AND CONSOLIDATIONS

NPS	SOCKET DEPTH	CL.3000 (3M) RUN PIPE CORRELATION: X-STG			CL.6000 (6M) RUN PIPE CORRELATION: SCH.160			CL.9000 (9M) RUN PIPE CORRELATION: XX-STG		
		A	C	CONSOLIDATION	A	C	CONSOLIDATION	A	C	CONSOLIDATION
1/4	**0.375**	1 9/16	0.364	36 - 1/4						
3/8	**0.375**	1 9/16	0.493	36 - 3/8						
1/2	**0.375**	1 9/16	0.622	1/2 36 - 3/4	1 7/8	0.464	36 - 1/2	1 7/8	0.252	36 - 1/2
3/4	**0.375**	1 7/8	0.824	1 - 3/4 36 - 1 1/4	2 3/16	0.612	36 - 3/4	2 3/16	0.434	36 - 3/4
1	**0.500**	2 3/16	1.049	1 1 1/2 - 1 1/4 36 - 2	2 1/2	0.815	1 36 - 1 1/4	2 1/2	0.599	36 - 1
1 1/4	**0.500**	2 1/2	1.380	1 1/2 - 1 1/4 3 - 2 36 - 3 1/2	2 5/8	1.160	2 - 1 1/4 36 - 2 1/2	2 5/8	0.896	1 1/4 36 - 1 1/2
1 1/2	**0.500**	2 9/16	1.610	2 - 1 1/2 4 - 2 1/2 36 - 5	3 1/8	1.338	1 1/2 3 - 2 36 - 3 1/2	3 1/8	1.100	2 - 1 1/2 36 - 2 1/2
2	**0.625**	3 1/16	2.067	2 2 1/2 3 1/2 - 3 6 - 4 36 - 8	3 1/8	1.687	2 1/2 - 2 5 - 3 36 - 6	3 1/8	1.503	2 4 - 2 1/2 36 - 5

NOTES : 1. LARGER SIZES AND SPECIAL DIMENSIONS AVAILABLE

2. TYPICAL SOCKET DEPTH TOLERANCE: +.063 / - .000

2. T_b AVAILABLE UPON REQUEST

THREADED LATERAL BRANCHETTE®

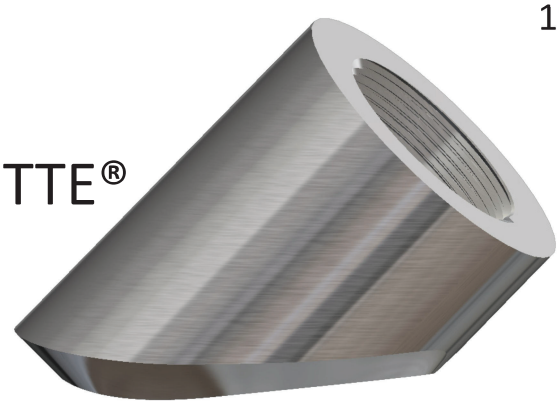

SIZE : 1/2 - 2 **CLASS** : 3000, 6000, 10000
MATERIAL : ALL ASTM / ASME MATERIAL GRADES
PRODUCT CONFORMITY : MSS SP-97, ASME B16.11, ASME B1.20.1 (NPT), B31.1, B31.3

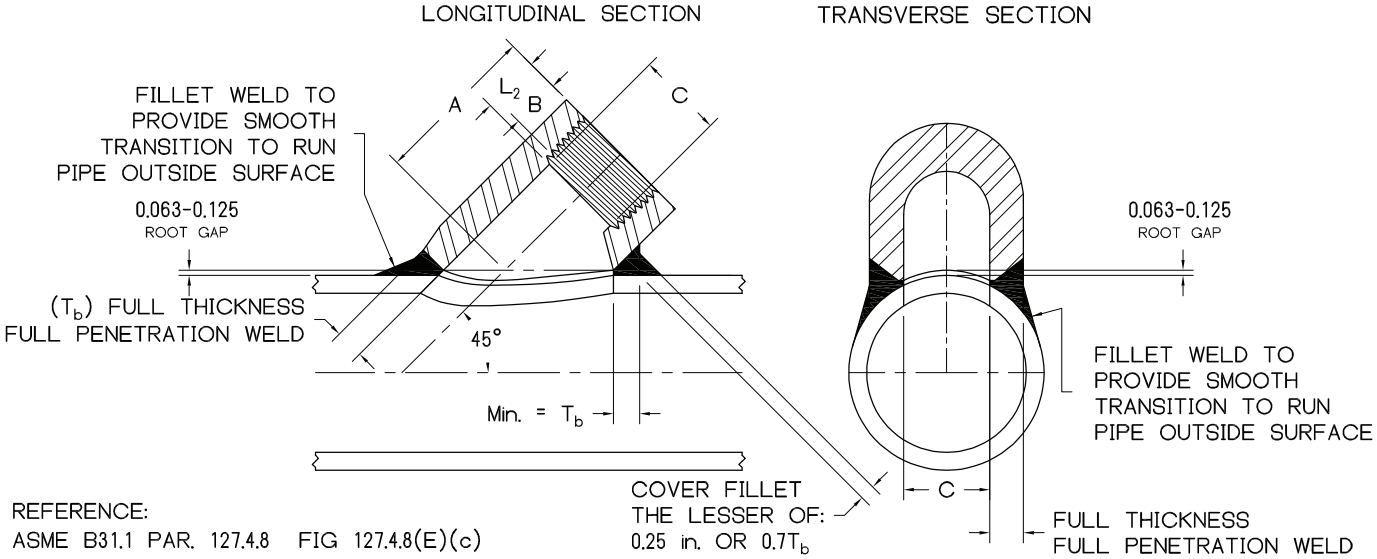

REFERENCE:
ASME B31.1 PAR. 127.4.8 FIG 127.4.8(E)(c)

DIMENSIONS AND CONSOLIDATIONS													
NPS	SEE NOTE 2		CONSOLIDATION (ALL CLASSES)	CL.3000 (3M) RUN PIPE CORRELATION: X-STG			CL.6000 (6M) RUN PIPE CORRELATION: SCH.160			CL.10000 (10M) RUN PIPE CORRELATION: XX-STG		
	B	L_2		A	C	WT	A	C	WT	A	C	WT
1/2	0.43	0.5337	3/4 - 1/2 36 - 1	1.563	0.718	0.27	2	0.718	0.77	2.125	0.718	1.17
3/4	0.50	0.5457	3/4 1 1/4 - 1 36 - 1 1/2	1.875	0.922	0.42	2.313	0.922	1.14	2.563	0.922	2.35
1	0.58	0.6828	1 2 - 1 1/4 36 - 2 1/2	2.188	1.141	0.87	2.688	1.141	2.23	2.813	1.141	3.05
1 1/4	0.67	0.7068	1 1/4 2 - 1 1/2 4 - 2 1/2 36 - 5	2.500	1.500	1.61	2.875	1.500	2.63	3.125	1.500	4.68
1 1/2	0.70	0.7235	1 1/2 2 1 /2 - 2 5 - 3 36 - 6	2.563	1.734	2.02	3.188	1.718	4.32	3.500	1.734	7.85
2	0.75	0.7565	2 2 1/2 3 4 - 3 1/2 8 - 5 36 - 10	3.063	2.219	2.97	3.875	2.188	7.37	4.188	2.219	12.39

NOTES : 1. LARGER SIZES, SPECIAL DIMENSIONS AND SPECIAL THREADS AVAILABLE
2. DIMENSION B IS MINIMUM OF PERFECT THREAD. THE LENGTH OF USEFUL THREAD (B PLUS THREADS WITH FULLY FORMED ROOTS AND FLAT CRESTS) SHALL NOT BE LESS THAN L2 (EFFECTIVE LENGTH OF EXTERNAL THREADED) PER ASME B1.20.1
3. Tb AVAILABLE UPON REQUEST

SOCKET WELD ELBOW BRANCHETTE®

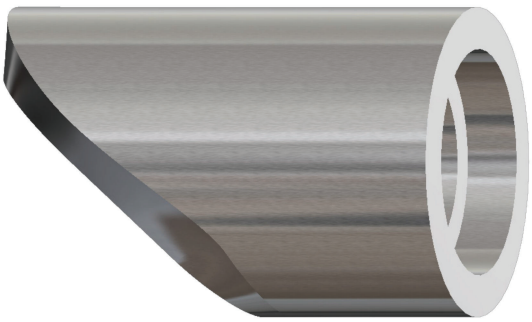

SIZE : 1/4 - 2 **IDENTIFICATION** : 3000, 6000, 9000

MATERIAL : ALL ASTM / ASME MATERIAL GRADES

PRODUCT CONFORMITY : MSS SP-97, ASME B16.11, ASME B31.1, ASME B31.3

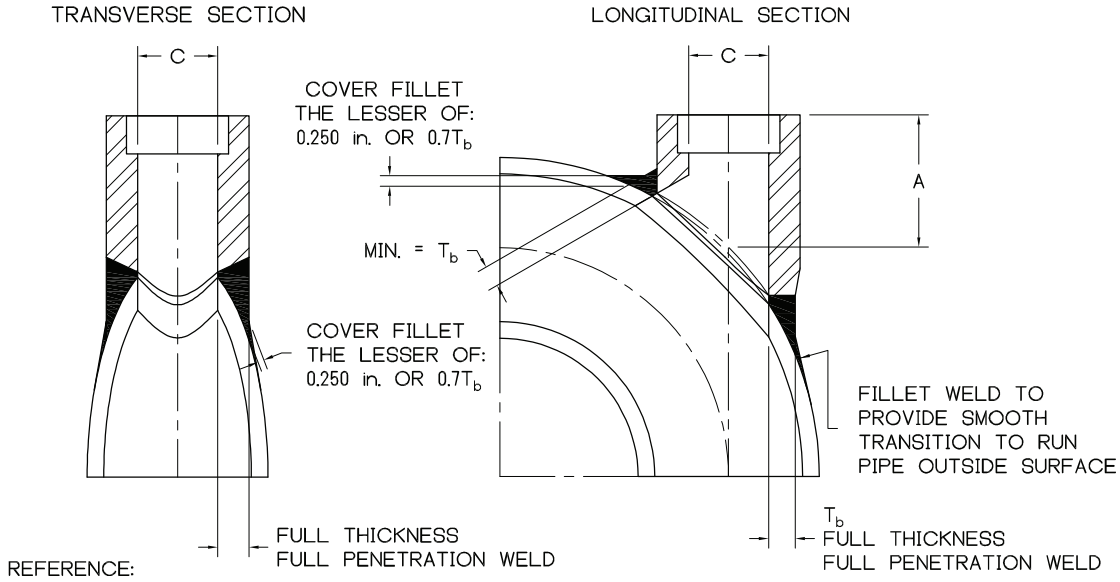

REFERENCE:
ASME B31.1 PAR. 127.4.8 FIG 127.4.8(E)(c)

COVER FILLET NOTE: The minimum cover weld throat thickness applies when the angle between the branch fitting groove weld face and the run pipe surface is less than 135 deg. For areas where the angle between the groove weld face and the run pipe surface is 135 deg or greater, the cover weld may transition to nothing. Cover fillet shall provide a smooth transition to run pipe.

DIMENSIONS AND CONSOLIDATIONS

NPS	SOCKET DEPTH	CL.3000 (3M) RUN PIPE CORRELATION: X-STG			CL.6000 (6M) RUN PIPE CORRELATION: SCH.160			CL.9000 (9M) RUN PIPE CORRELATION: XX-STG		
		A	C	CONSOLIDATION	A	C	CONSOLIDATION	A	C	CONSOLIDATION
1/4	**0.375**	1.188	0.364							
3/8	**0.375**	1.375	0.493							
1/2	**0.375**	1.563	0.622	36 - 3/4	1.938	0.464	36 - 3/4	2.063	0.252	36 - 3/4
3/4	**0.375**	1.875	0.824	36 - 1	2.313	0.612	36 - 1	2.375	0.434	36 - 1
1	**0.500**	2.188	1.049	36 - 2	2.563	0.815	36 - 2	2.688	0.599	36 - 2
1 1/4	**0.500**	2.500	1.380	36 - 2	2.813	1.160	36 - 2	3.000	0.896	36 - 2
1 1/2	**0.500**	2.625	1.610	36 - 2	3.188	1.338	36 - 2	3.188	1.100	36 - 2
2	**0.625**	3.063	2.067	36 - 3	3.688	1.687	36 - 3	3.813	1.503	36 - 3

NOTES : 1. LARGER SIZES AND SPECIAL DIMENSIONS AVAILABLE 2. T_b AVAILABLE UPON REQUEST

3. TYPICAL SOCKET DEPTH TOLERANCE: +.063 / - .000

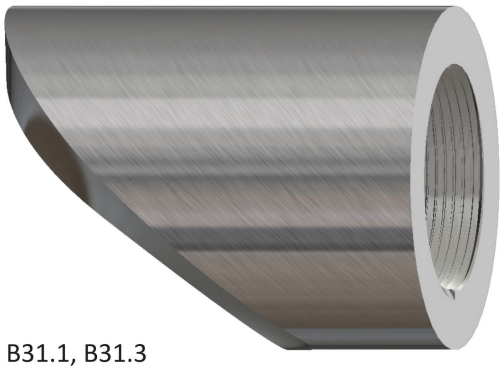

THREADED ELBOW BRANCHETTE®

SIZE : 1/4 - 2 **CLASS** : 3000, 6000, 10000

MATERIAL : ALL ASTM / ASME MATERIAL GRADES

PRODUCT CONFORMITY : MSS SP-97, ASME B16.11, ASME B1.20.1 (NPT), B31.1, B31.3

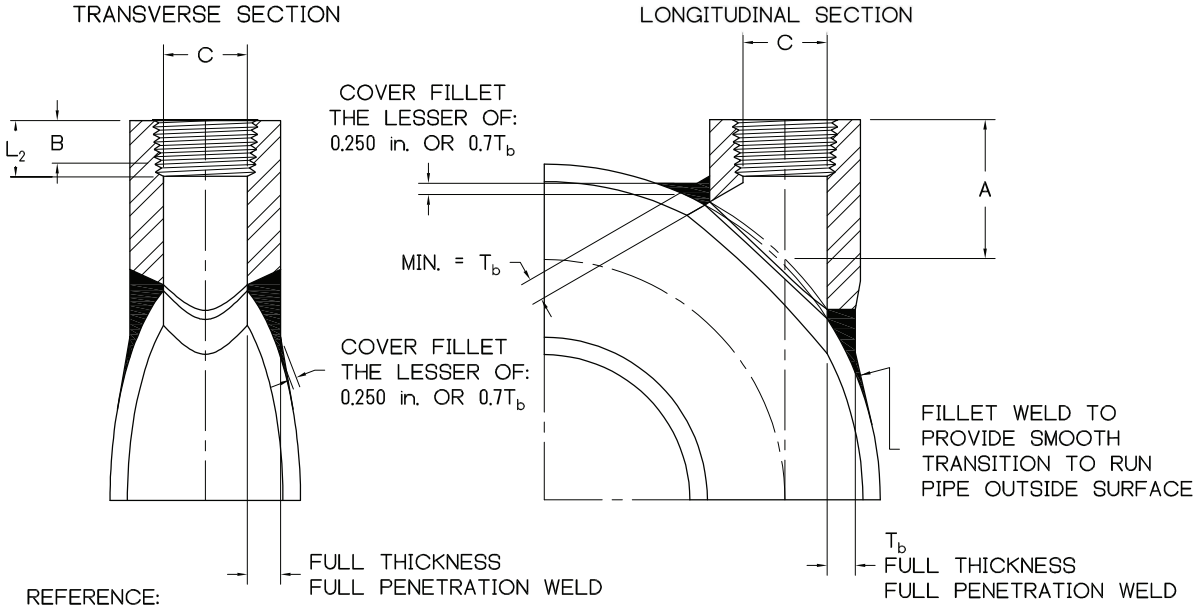

REFERENCE:
ASME B31.1 PAR. 127.4.8 FIG 127.4.8(E)(c)

COVER FILLET NOTE: The minimum cover weld throat thickness applies when the angle between the branch fitting groove weld face and the run pipe surface is less than 135 deg. For areas where the angle between the groove weld face and the run pipe surface is 135 deg or greater, the cover weld may transition to nothing. Cover fillet shall provide a smooth transition to run pipe.

DIMENSIONS AND CONSOLIDATIONS													
NPS	SEE NOTE 2		CONSOLIDATION (ALL CLASSES)	CL.3000 (3M) RUN PIPE CORRELATION: X-STG			CL.6000 (6M) RUN PIPE CORRELATION: SCH.160			CL.10000 (10M) RUN PIPE CORRELATION: XX-STG		
	B	L_2		A	C	WT	A	C	WT	A	C	WT
1/4	0.32	0.4018	36 - 3/4	1.125	0.437	0.15	1.563	0.437	0.28	1.625	0.437	0.49
3/8	0.36	0.4078	36 - 3/4	1.25	0.578	0.18	1.625	0.578	0.43	1.688	0.578	0.69
1/2	0.43	0.5337	36 - 3/4	1.375	0.718	0.28	1.750	0.718	0.78	1.750	0.718	0.99
3/4	0.50	0.5457	36 - 1	1.563	0.922	0.43	2.000	0.922	1.13	2.063	0.922	1.95
1	0.58	0.6828	36 - 2	1.938	1.141	0.84	2.250	1.141	2.06	2.313	1.141	2.59
1 1/4	0.67	0.7068	36 - 2	2.125	1.500	1.54	2.500	1.500	2.50	2.625	1.500	4.05
1 1/2	0.70	0.7235	36 - 2	2.313	1.734	1.98	2.750	1.734	4.16	2.938	1.734	6.7
2	0.75	0.7565	36 - 3	2.688	2.219	3.03	3.375	2.219	7.31	3.500	2.219	10.69

NOTES : 1. LARGER SIZES, SPECIAL DIMENSIONS AND SPECIAL THREADS AVAILABLE
2. DIMENSION B IS MINIMUM OF PERFECT THREAD. THE LENGTH OF USEFUL THREAD (B PLUS THREADS WITH FULLY FORMED ROOTS AND FLAT CRESTS) SHALL NOT BE LESS THAN L2 (EFFECTIVE LENGTH OF EXTERNAL THREADED) PER ASME B1.20.1
3. Tb AVAILABLE UPON REQUEST

NIPPLE BRANCHETTE®

SIZE : 1/2 - 4 **IDENTIFICATION** : X-STG, SCH.160, AND XX-STG
MATERIAL : ALL ASTM / ASME MATERIAL GRADES
PRODUCT CONFORMITY : MSS SP-97, ASME B1.20.1 (NPT) B31.1, B31.3

THE NIPPLE BRANCHETTE IS AVAILABLE WITH PLAIN END, THREADED END, BEVELED END, OR GROOVED END IN ALL GRADES OF MATERIALS. STANDARD HEIGHTS ARE 3-1/2", 4-1/2", 5-1/2", AND 6-1/2" AND ARE AVAILABLE IN ALL END CONDITIONS. OTHER HEIGHTS ARE AVAILABLE UPON REQUEST. THREADED ENDS HAVE MALE NPT THREADS IN ACCORDANCE WITH ASME B1.20.1. BEVELED ENDS ARE IN ACCORDANCE WITH ASME B16.25. NIPPLE BRANCHETTES MEET THE REQUIREMENTS OF ASME B31.3 FOR INTEGRALLY REINFORCED BRANCH CONNECTIONS.

ELIMINATE
2-PIECE CONSTRUCTION
1 MATERIAL TEST REPORTS
1 WELDS - 1 NDT INSPECTIONS (WHEN REQUIRED)
COSTLY FIT UP AND FABRICATION TIME
WELD PROTRUSION IN BORE AT WELD POINTS

ADVANTAGES
1-PIECE CONSTRUCTION
1 MATERIAL TEST REPORT
1 WELD - 1 NDT INSPECTION (WHEN REQUIRED)
REDUCED FIT UP AND FABRICATION TIME
SMOOTH SEAMLESS BORE PROVIDES BETTER FLOW

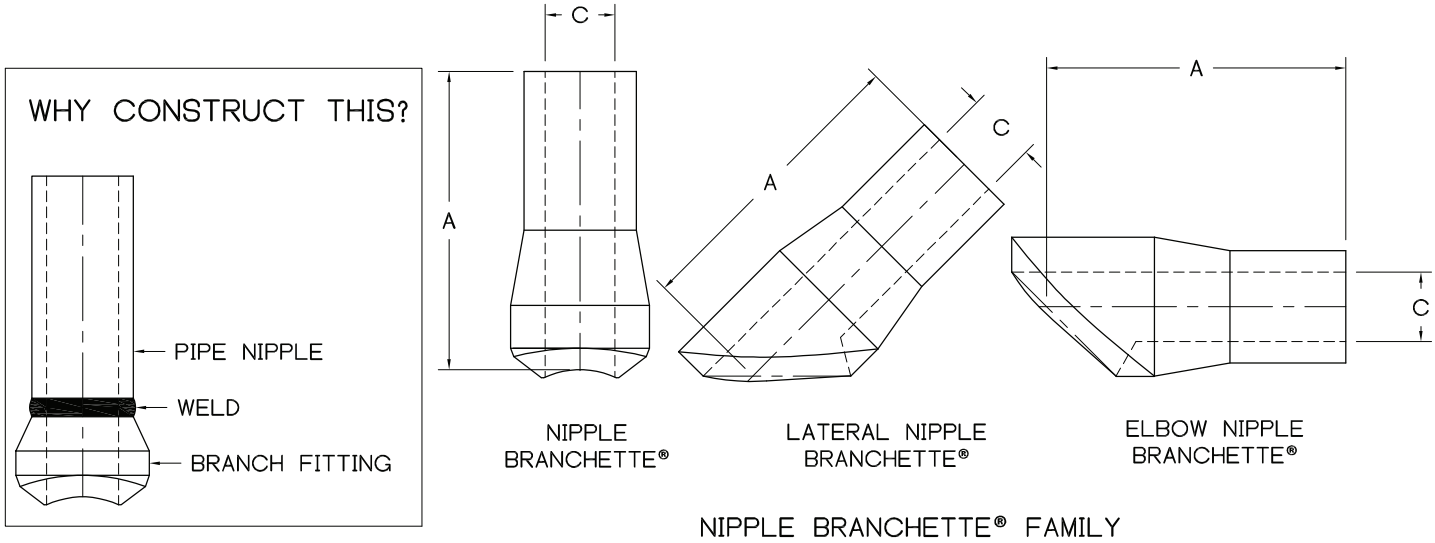

DIMENSIONS AND WEIGHTS

NPS	STANDARD HEIGHTS "A"				BORE "C"			WT 90°FITTING 3 1/2 LG		
					X-STG	SCH.160	XX-STG	XSTG	SCH.160	XX-STG
1/2	3 1/2	4 1/2	5 1/2	6 1/2	0.546	0.464	0.252	0.68	0.73	0.83
3/4	3 1/2	4 1/2	5 1/2	6 1/2	0.742	0.612	0.434	0.77	0.89	1.01
1	3 1/2	4 1/2	5 1/2	6 1/2	0.957	0.815	0.599	0.85	1.03	1.23
1 1/4	3 1/2	4 1/2	5 1/2	6 1/2	1.278	1.160	0.896	1.63	1.82	2.16
1 1/2	3 1/2	4 1/2	5 1/2	6 1/2	1.500	1.338	1.100	1.92	2.22	2.58
2	3 1/2	4 1/2	5 1/2	6 1/2	1.939	1.687	1.503	2.44	3.04	3.40

NOTES: SPECIAL DIMENSIONS AVAILABLE BY REQUEST

FLANGED BRANCHETTE®

SIZE : 1/2 - 4 **IDENTIFICATION** : CL.150 THROUGH CL.2500
MATERIAL : ALL ASTM / ASME MATERIAL GRADES
PRODUCT CONFORMITY : MSS SP-97, ASME B16.5, B31.1, B31.3

THE FLANGED BRANCHETTE® IS AVAILABLE WITH ANY STANDARD FACING AND WITH ANY SPECIFIED BORE. SPECIAL FACINGS MACHINED TO YOUR REQUIREMENTS CAN ALSO BE ACCOMMODATED. THE FLANGED BRANCHETTE® IS IDEAL FOR MULTIPLE MANIFOLD OUTLETS WHERE CONSISTENT FLANGE FACE HEIGHT IS REQUIRED. FLANGE DIMENSIONS AND TOLERANCES ARE IN ACCORDANCE WITH ASME B16.5.

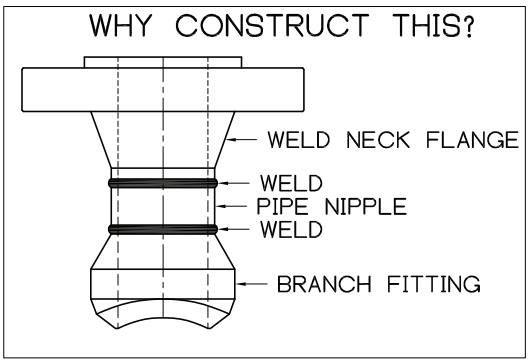

ELIMINATE
*3-PIECE CONSTRUCTION
*2 MATERIAL TEST REPORTS
*2 WELDS - 2 NDT INSPECTIONS (WHEN REQUIRED)
*COSTLY FIT UP AND FABRICATION TIME
*WELD PROTRUSION IN BORE AT WELD POINTS
*INCONSISTENT FLANGE FACE HEIGHT

ADVANTAGES
*1-PIECE CONSTRUCTION
*1 MATERIAL TEST REPORT
*1 WELD - 1 NDT INSPECTION (WHEN REQUIRED)
*REDUCED FIT UP AND FABRICATION TIME
*CONSISTENT FLANGE FACE HEIGHT
*SMOOTH SEAMLESS BORE PROVIDES BETTER FLOW

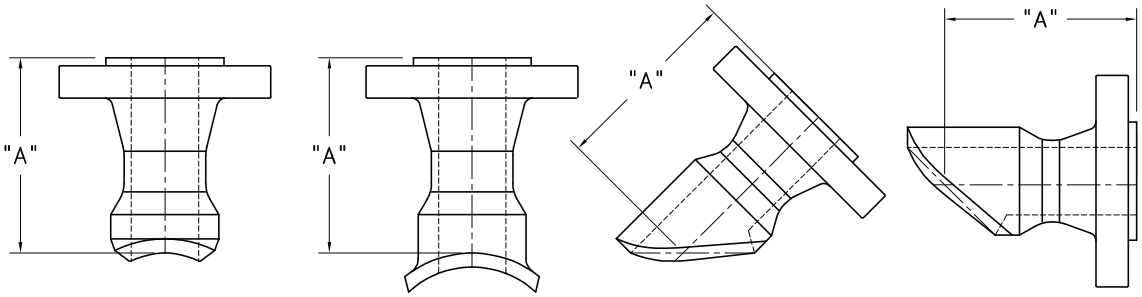

FLANGED BRANCHETTE® FAMILY

CL.150		CL.300		CL.400/600		CL.900/1500		CL.2500	
NPS	A	NPS	A	NPS	A	NPS	A	NPS	A
1/2	6	1/2	6	1/2	6	1/2	6*	1/2	6*
3/4	6	3/4	6	3/4	6	3/4	6*	3/4	6*
1	6	1	6	1	6	1	6*	1	6*
1 1/4	6	1 1/4	6	1 1/4	6	1 1/4	6*	1 1/4	6*
1 1/2	6	1 1/2	6	1 1/2	6	1 1/2	6*	1 1/2	9
2	6	2	6	2	6	2	9	2	9

NOTES: CL.1500 AND 2500 FLANGED LATERAL AND ELBOW BRANCHETTES, A = 9.
SPECIAL DIMENSIONS AVAILABLE BY REQUEST
UNLESS SPECIFIED OTHERWISE, FLANGE DIMESIONS ARE IN ACC. WITH ASME B16.5, LATEST EDITION

BUTT WELD INSERT BRANCHETTE®

SIZE : 1/2 - 24
IDENTIFICATION : STANDARD, X-STG, SCH.160, XX-STG
MATERIAL : ALL ASTM / ASME MATERIAL GRADES
PRODUCT CONFORMITY : MSS SP-97, ASME B16.25, ASME B31.1, ASME B31.3

INSERT BRANCHETTES ARE DESIGNED SPECIFICALLY FOR CRITICAL SERVICE WHERE A FULLY INTERPRETABLE X-RAY IS REQUIRED AT THE OUTLET-TO-HEADER WELD. THIS INTEGRAL DESIGN SATISFIES ASME CODE REQUIREMENTS BY RESTORING 100% OF PIPE STRENGTH. THE INSERT BRANCHETTE IS IDEAL FOR CYCLIC CONDITIONS INCLUDING PRESSURE CYCLES AND OR THERMAL CYCLES. THE INSERT BRANCHETTE IS DESIGNED AND CONTOURED TO PROVIDE A FLUSH FIT WITH THE RUN PIPE O.D. AND I.D. IN MOST APPLICATIONS, THE INSERT BRANCHETTE IS ROUND, FACILITATING THE USE OF AUTOMATIC CIRCLE BURNING AND WELDING EQUIPMENT.

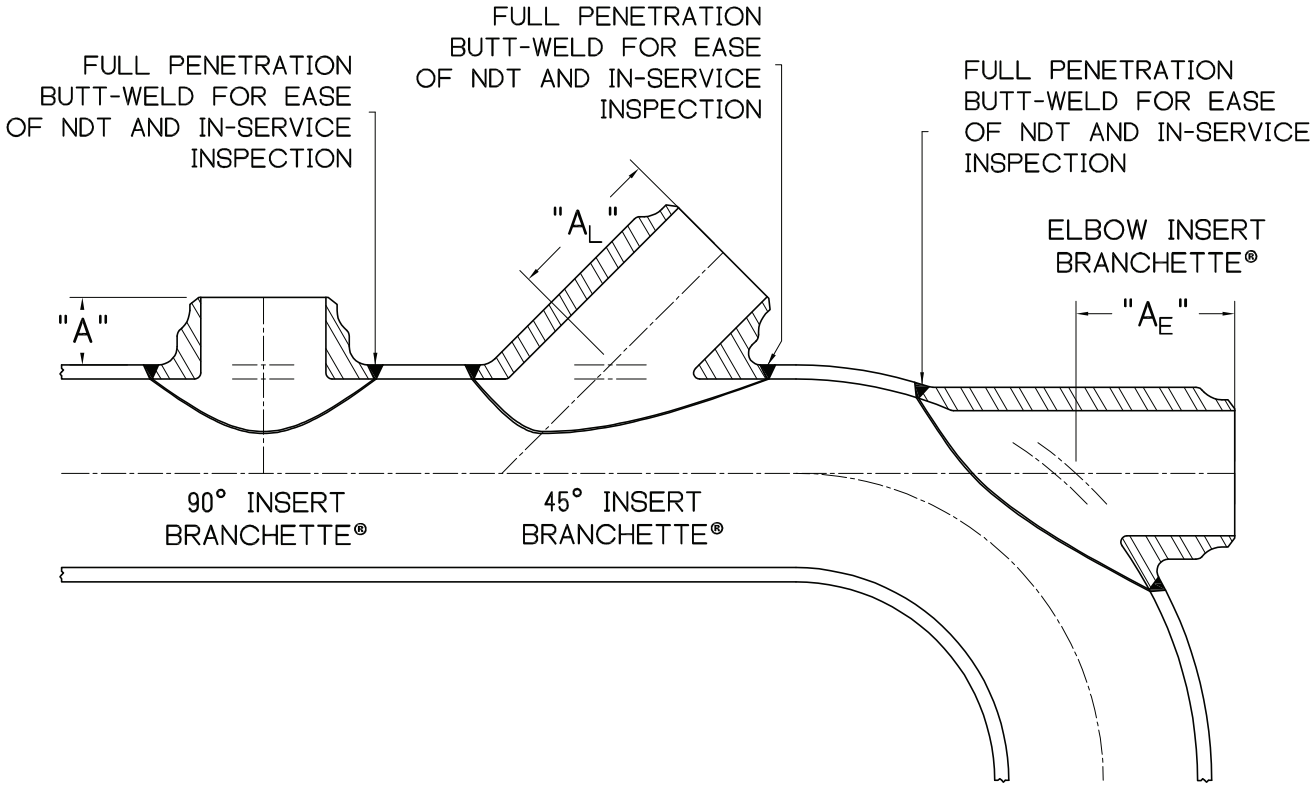

90° INSERT BRANCHETTE "A" DIMENSIONS & MINIMUM HEADER											
BRANCH NPS	"A"	HEADER RANGE	BRANCH NPS	"A"	HEADER RANGE	BRANCH NPS	"A"	HEADER RANGE	BRANCH NPS	"A"	HEADER RANGE
1/2	1 1/4	≥ 1	**2**	1 3/4	≥ 3	**8**	3	≥ 10	**18**	4 5/8	≥ 20
3/4	1 1/4	≥ 1 1/4	**3**	1 11/16	≥ 4	**10**	3 1/8	≥ 14	**20**	5 1/8	≥ 24
1	1 1/4	≥ 1/2	**4**	2 1/16	≥ 5	**12**	3 5/16	≥ 16	**24**	5 5/8	≥ 28
1 1/4	1 1/4	≥ 2	**5**	2 1/4	≥ 6	**14**	3 5/8	≥ 16			
1 1/2	1 1/2	≥ 2 1/2	**6**	2 11/16	≥ 8	**16**	3 3/4	≥ 18			

NOTES: 1. LARGER SIZES, SPECIAL DIMENSIONS, AND SPECIAL WALL THICKNESSES AVAILABLE
2. "A" DIMENSION APPLICABLE TO STANDARD AND EXTRA STRONG ONLY
3. "A_L" AND "A_E" AVAILABLE UPON REQUEST

PLEASE REFER TO PAGE 22 FOR AVIATION FUEL PIPING INSERT BRANCHETTES®

SWEEP INSERT BRANCHETTE®

SIZE : 1 1/4 - 24 **IDENTIFICATION / SCHEDULE** : PER ASME B36.19 & B36.10

MATERIAL : ALL ASTM / ASME MATERIAL GRADES

PRODUCT CONFORMITY : MSS SP-97, ASME B16.25, ASME B31.1, ASME B31.3

THE SWEEP INSERT BRANCHETTE IS WOI'S TRADITIONAL WELD-IN CONTOUR INSERT BRANCH OUTLET FITTING. LIKE WOI'S BUTT WELD INSERT BRANCHETTE, IT IS AN INTEGRALLY REINFORCED INSERT BRANCH CONNECTION DESIGNED SPECIFICIALLY FOR CYCLIC CONDITIONS, EXTREME PRESSURE/TEMPERATURE, SAFETY RELIEF VALVE APPLICAITONS, OR CRITICAL SERVICE. WHILE THE BUTT WELD INSERT BRANCHETTE IS LESS EXPENSIVE AND COSTS LESS TO INSTALL DUE TO ITS SMALLER FOOTPRINT, WOI DOES OFFER THE SWEEP INSERT BRANCHETTE FOR THOSE CLIENTS WHO ABSOLUTELY WANT NO OTHER FITTING.

DIMENSIONS		
NPS	A	B
1 1/4	1 1/4	4
1 1/2	1 3/4	5 1/2
2	1 1/2	5 1/2
3	1 11/16	7
4	2 1/16	8 3/4
6	2 11/16	13
8	3	15
10	3 1/8	18 1/2
12	3 5/16	20 1/2
14	3 5/8	24
16	3 3/4	28
18	4 5/8	31
20	5 1/8	33
24	5 5/8	38

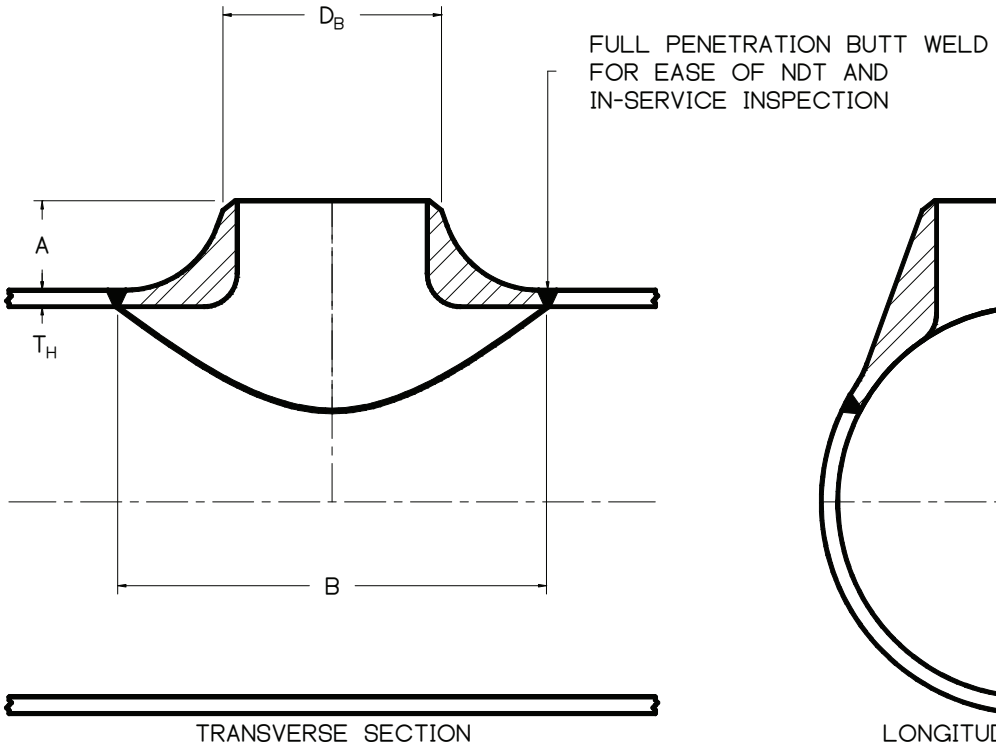

NOTES : 1. LARGER SIZES AND SPECIAL DIMENSIONS AVAILABLE

2. FULL SIZE, FIRST REDUCTION AND SECOND REDUCTION ARE NOT MANUFACTURED.

SAFETY RELIEF VALVE INSERT BRANCHETTE®

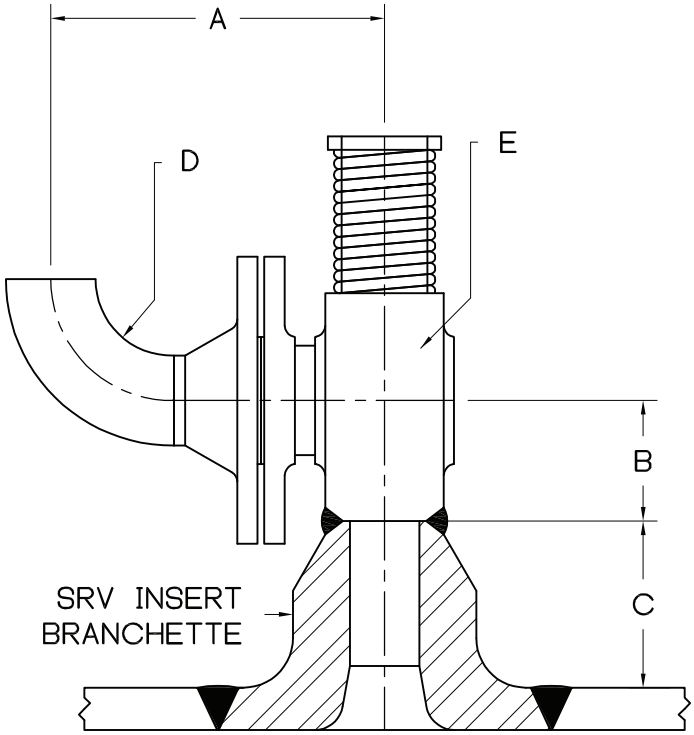

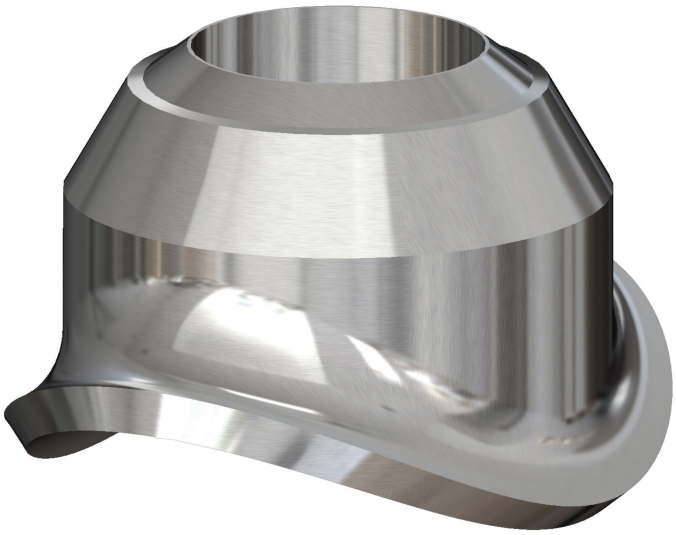

THE WOI SRV INSERT BRANCHETTE IS DESIGNED TO MEET PIPING DESIGN CODES FOR PRESSURE, TEMPERATURE, VIBRATION, AND/OR EXTERNAL LOADING.

IT IS THE IDEAL FITTING FOR FLOW INDUCED VIBRATION, SEISMIC LOADS, REACTION FORCES AND PREMATURE SEAT FAILURE.

SRV INSERT BRANCHETTE DATA SHEET			
VALVE IDENTIFICATION			
	VALVE NUMBER		VALVE NAME
PROCESS NOMENCLATURE			
	STEAM PRESSURE, PSIA		HEADER OUTSIDE DIAMETER
	STREAM TEMPERATURE, °F		HEADER NOMINAL WALL
	STREAM FLOW, LBS/HR		
			HEADER MATERIAL
			SRV BRANCHETTE MATERIAL
VALVE NOMENCLATURE			
	VALVE WEIGHT, LBS		VALVE INLET OD
	VALVE SET PRESSURE, PSIA		VALVE INLET ID
	VALVE FLOW CAPACITY, LBS/HR		VALVE OUTLET ID
			WELD PREP (IF REQUIRED)

DIMENSIONAL VALUES & DEFAULTS		DEFAULTS	
	"A" OFFSET OF DISCHARGE ELBOW (24" DEFAULT IF NOT GIVEN)	NPS	HEIGHT
	"B" HEIGHT OF RELIEF VALVE SEAT	3"	6"
	"C" MAX, MIN, OR WOI OPTIMIZES	4"	8"
	"D" VALVE DISCHARGE ELBOW OD AND WALL THICKNESS	6"	8"
	"E" VALVE LIFT TIME (FROM VALVE MFG. 0.4 SEC. DEFAULT)	8"	10"

DEFAULT VALUES ARE USED TO COMPLETE THE DESIGN ANALYSIS WHEN NONE ARE SPECIFIED

SPECIALTY NOZZLES

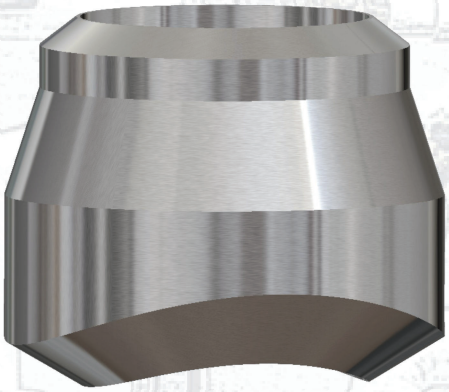

BUTT WELD NOZZLES ARE MOST COMMONLY PRODUCED IN CHARTED WALL THICKNESSES / SCHEDULES. THEY ARE AVAILABLE IN ANY COMBINATION OF OD AND WALL THICKNESS IMAGINABLE. WE WILL MANUFACTURE TO YOUR SPECIFIED DIMENSIONS.

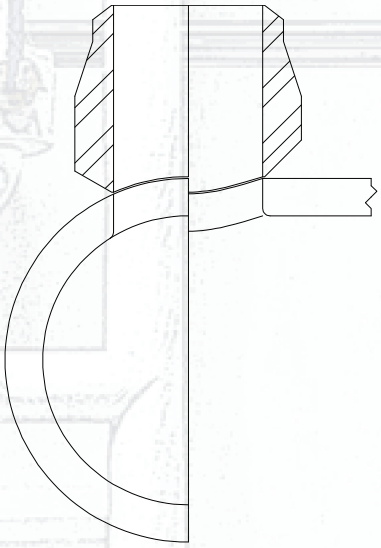

NOZZLES CAN BE MANUFACTURED AS FLAT OR CONTOURED FOR EITHER A SET-ON OR SET-IN APPLICATION. THE CONTOUR RADIUS WILL MATCH THE RADIUS OF EITHER THE OUTER DIAMETER OR INNER DIAMETER OF THE HEADER VESSEL.

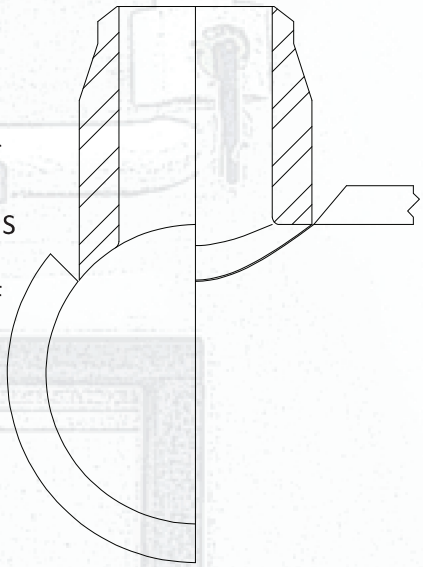

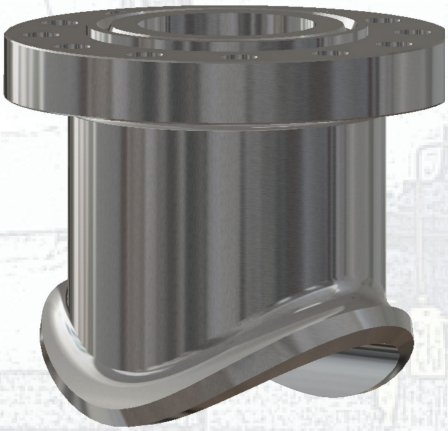

NOZZLES CAN BE MANUFACTURED WITH A FLANGE FACING TO MATCH ASME OR API REQUIREMENTS. INSERT NOZZLES CAN ALSO BE PROVIDED WITH AN INSERT OR “Q” STYLE LIP.

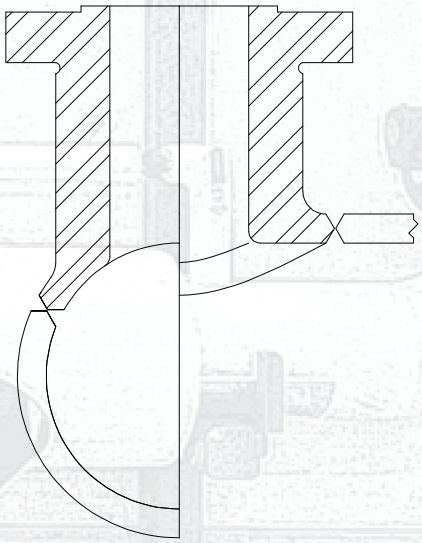

COUPLETS AND WELD BOSSES

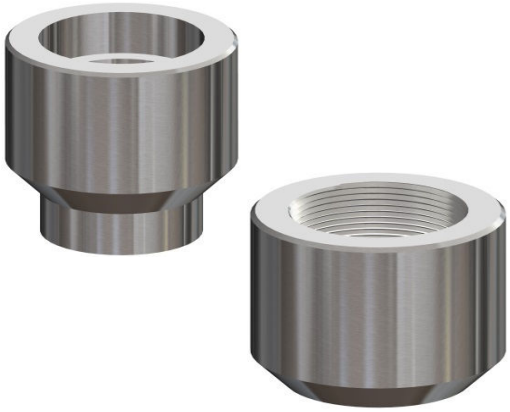

SIZE : 1/2 - 2 **CLASS** : 3000, 6000, 9000
MATERIAL : ALL ASTM / ASME MATERIAL GRADES
PRODUCT CONFORMITY : ASME B16.11, ASME B31.1, ASME B31.3

SOCKET-WELD
COUPLET BOSS (SWCB)

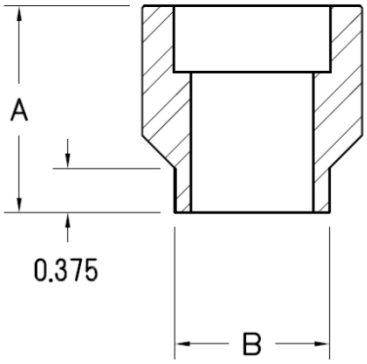

THREADED
COUPLET BOSS (THCB)

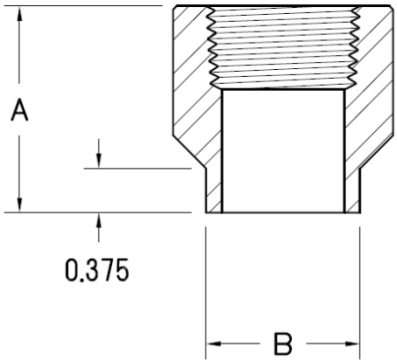

COMBINATION
COUPLET BOSS (CBCB)

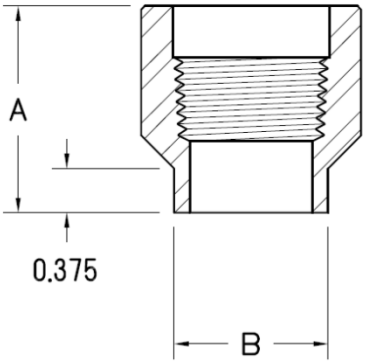

COUPLETS AND WELD BOSSES BASIC DIMENSIONS							
CLASS 3000 & 6000		0.5	0.75	1	1.25	1.5	2
A	SOCKET	1.313	1.375	1.688	1.875	2.000	2.250
	THREADED	1.313	1.375	1.688	1.875	2.000	2.250
	COMBINATION	1.688	1.875	2.188	2.375	2.500	2.875
B	SOCKET	0.938	1.063	1.313	1.688	1.938	2.438
	THREADED	0.938	1.063	1.313	1.688	1.938	2.438
	COMBINATION	0.938	1.063	1.313	1.688	1.938	2.438
C	SOCKET	1.250	1.438	1.625	1.688	1.750	2.250
	THREADED	0.938	1.000	1.188	1.313	1.563	1.688
	COMBINATION	1.313	1.500	1.688	1.813	2.063	1.313

SOCKET-WELD
WELD BOSS (SWWB)

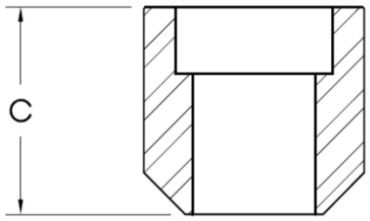

THREADED
WELD BOSS (THWB)

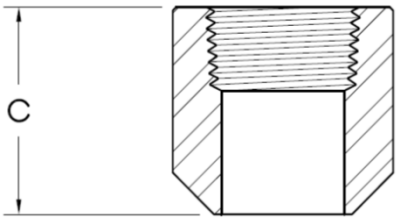

COMBINATION
WELD BOSS (CBWB)

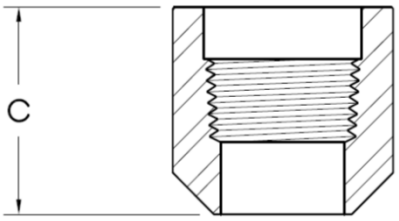

NOTES: 1. SPECIAL DIMENSIONS AVAILABLE UPON REQUEST

RADIOGRAPHIC PLUGS AND BOSSES

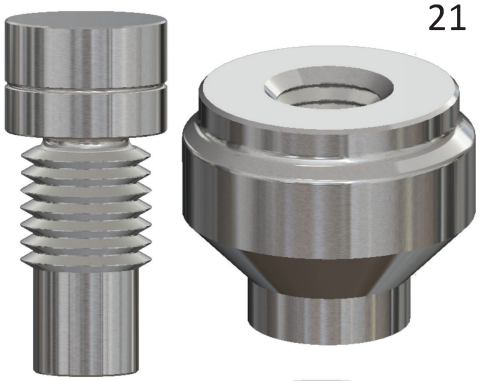

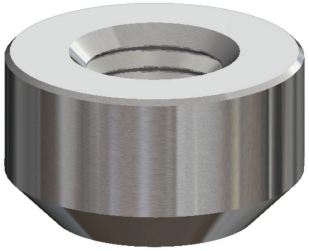

SIZE : 1 - 2
MATERIAL : ALL ASTM / ASME MATERIAL GRADES
PRODUCT CONFORMITY : PFI ES-16

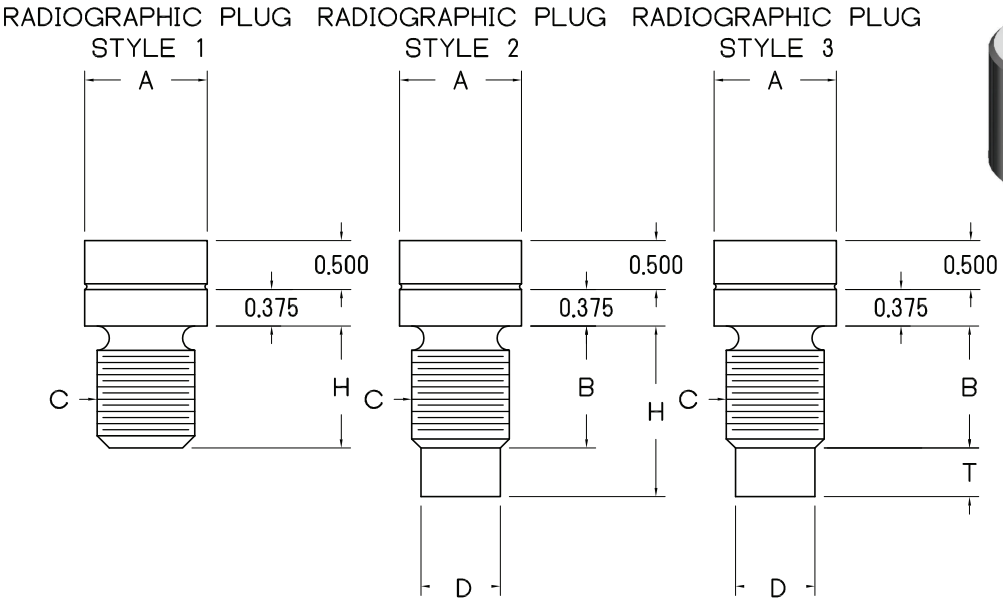

BASIC DIMENSIONS - BOSS AND PLUG									
PFI FIG.	PIPE WALL RANGE	PLUG STYLE	BOSS STYLE	A	B	C	D	H	T
1	< 0.625	1	N/A	1.25	N/A	1"-8 UNC-3A	N/A	0.625	N/A
2	0.625 - 1.375	1	N/A	1.25	N/A	1"-8 UNC-3A	N/A	= MIN. WALL	N/A
3	1.376 - 3.000	2	N/A	1.25	1.25	1"-8 UNC-3A	0.813	= MIN. WALL	N/A
4	3.001 - 5.000	2	N/A	1.75	1.50	1 1/2"-6 UNC-3A	1.234	= MIN. WALL	N/A
5	> 5.000	2	N/A	2.25	2.00	2"-4 1/2 UNC-3A	1.656	= MIN. WALL	N/A
6	< 0.625	3	1	1.25	1.00	1"-8 UNC-3A	0.813	N/A	= NOM. WALL
8	< 1.500	3	2	1.25	1.50	1"-8 UNC-3A	0.813	N/A	= NOM. WALL
9	1.501 - 3.250	3	2	1.75	1.75	1 1/2"-6 UNC-3A	1.234	N/A	= NOM. WALL
10	> 3.250	3	2	2.25	2.00	2"-4 1/2 UNC-3A	1.656	N/A	= NOM. WALL

RADIOGRAPHIC BOSS STYLE 1

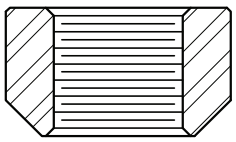

OPTIONAL SUBSTITUTE TO WELD BUILD UP WHEN PIPE WALL IS LESS THAN 5/8.

RADIOGRAPHIC BOSS STYLE 2

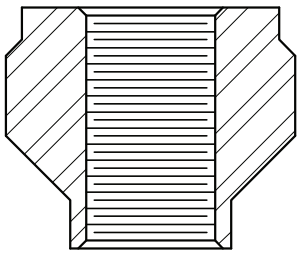

INTEGRALLY REINFORCED BOSS FOR CREEP SERVICE

AVIATION FUEL PIPING INSERT BRANCHETTE®

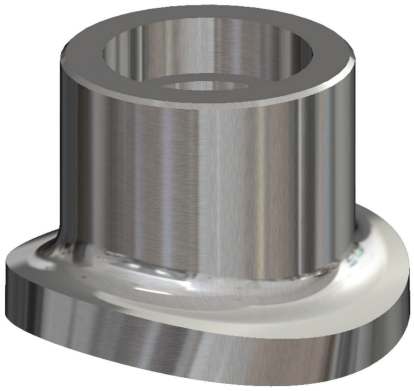

SIZE : 1/2 - 2

IDENTIFICATION: SCH.10s, SCH.40s, SCH.80s, CL.150, CL.300, CL.3000

MATERIAL : A105, F304/L, F316/L

PRODUCT CONFORMITY : MSS SP-97, ASME B16.11, ASME B1.20.1 (NPT), ASME B31.1, ASME B31.3

AVIATION FUEL INSERT BRANCHETTES® ARE DESIGNED SPECIFICALLY FOR AVIATION FUEL PIPING WHERE A FULLY INTERPRETABLE X-RAY IS REQUIRED AT THE OUTLET-TO-HEADER WELD. THE AVIATION INSERT BRANCHETTE® IS DESIGNED AND CONTOURED TO PROVIDE A FLUSH FIT WITH THE RUN PIPE O.D. AND I.D. IN MOST APPLICATIONS, THE AVIATION INSERT BRANCHETTE® IS ROUND, FACILITATING THE USE OF AUTOMATIC CIRCLE BURNING AND WELDING EQUIPMENT.

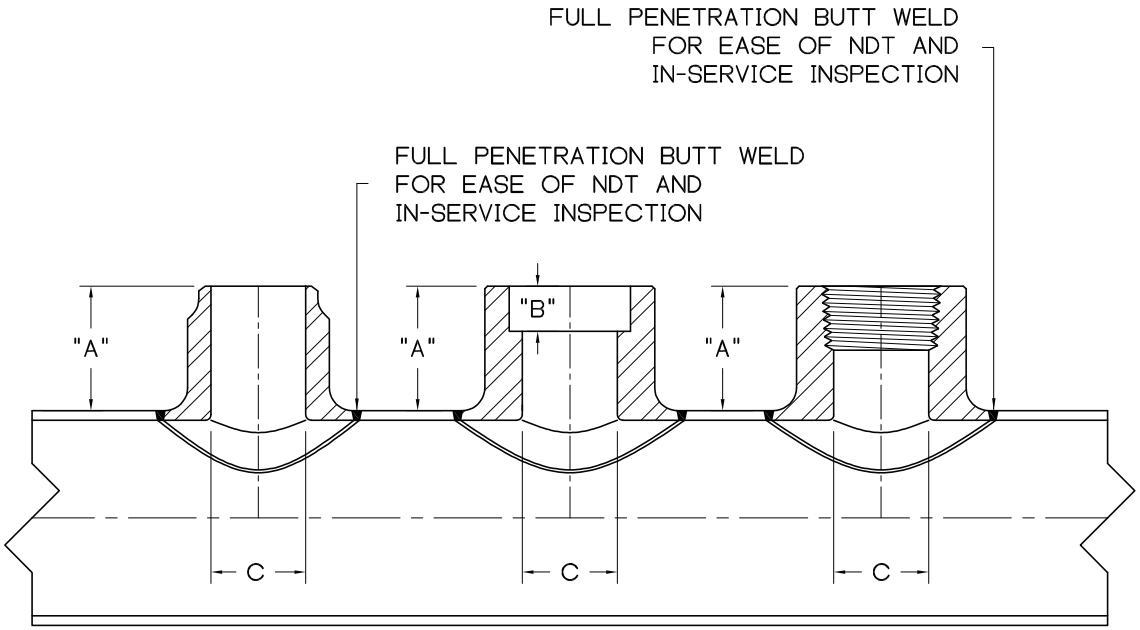

AVIATION FUEL PIPING BUTT WELD INSERT BRANCHETTE®

AVIATION FUEL PIPING SOCKET WELD INSERT BRANCHETTE®

AVIATION FUEL PIPING THREADED INSERT BRANCHETTE®

BASIC DIMENSIONS AND CONSOLIDATIONS

NPS	STD BUTT WELD			3M SOCKET WELD				3M THREADED		
	A	C	HEADER RANGE	A	B	C	HEADER RANGE	A	C	HEADER RANGE
1/2	1.250	0.622	≥ NPS 1	0.938	0.375	0.622	≥ NPS 1	1.000	0.703	≥ NPS 1
3/4	1.250	0.824	≥ NPS 1 1/4	1.063	0.500	0.824	≥ NPS 1 1/4	1.063	0.906	≥ NPS 1 1/4
1	1.250	1.049	≥ NPS 1 1/2	1.313	0.500	1.049	≥ NPS 1 1/2	1.313	1.141	≥ NPS 1 1/2
1 1/4	1.250	1.380	≥ NPS 2	1.313	0.500	1.380	≥ NPS 2	1.313	1.484	≥ NPS 2
1 1/2	1.500	1.610	≥ NPS 2 1/2	1.375	0.500	1.610	≥ NPS 2 1/2	1.375	1.719	≥ NPS 2 1/2
2	1.750	2.067	≥ NPS 3	1.500	0.625	2.067	≥ NPS 3	1.500	2.188	≥ NPS 3

NOTES : 1. LARGER SIZES AND SPECIAL DIMENSIONS AVAILABLE

LOW WELD VOLUME BRANCHETTES®

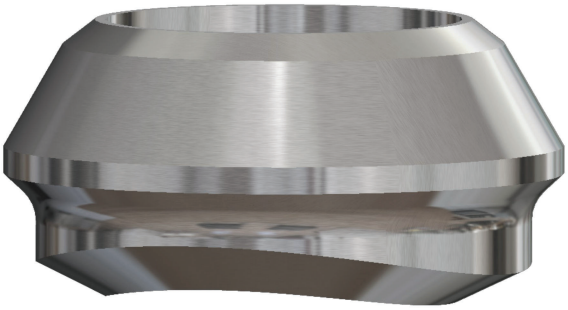

SIZE : 1/2 - 2 IDENTIFICATION: SCH.10s, SCH.40s CL.3000

MATERIAL : STAINLESS F304L & F316L

PRODUCT CONFORMITY : MSS SP-97, ASME B16.11, ASME B1.20.1 (NPT), ASME B31.1, ASME B31.3

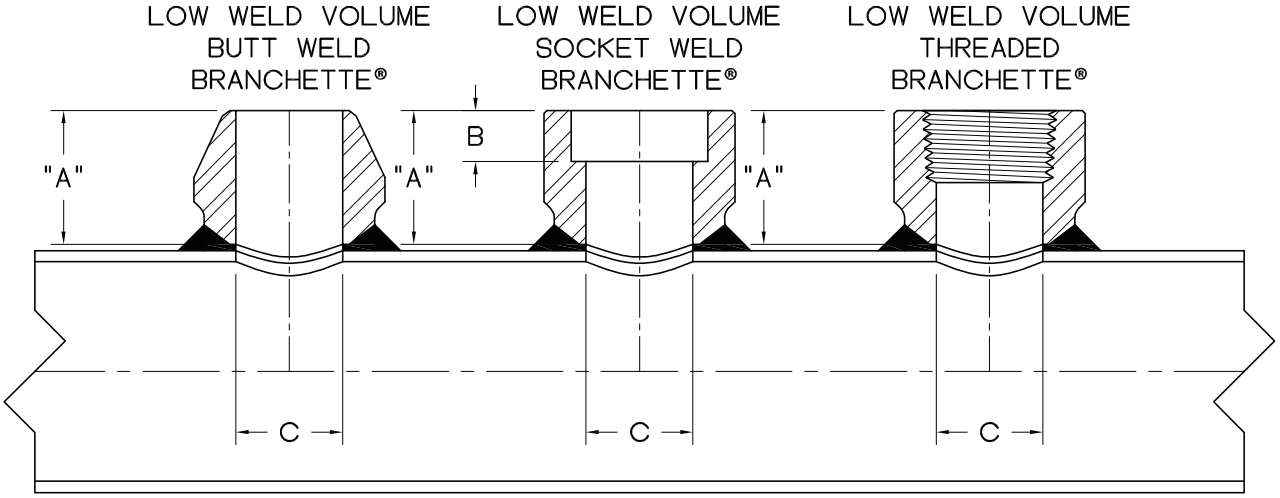

REFERENCE:
ASME B31.1 PAR. 127.4.8 FIG 127.4.8(E)(a)
ASME B31.3 PAR. 328.5.4 FIG 328.5.4D(1)

BASIC DIMENSIONS AND CONSOLIDATIONS

NPS	SCH.10s BUTT WELD BRANCHETTE®			SOCKET WELD BRANCHETTE®				THREADED BRANCHETTE®		
	A	C	CONSOLIDATION	A	B	C	CONSOLIDATION	A	C	CONSOLIDATION
1/2	0.750	0.674	1 1/4 - 1/2 36 - 1 1/2	0.938	0.375	0.622	1 - 1/2 36 - 1 1/4	1.000	0.703	1/2 1 1/2 - 3/4 36 - 2
3/4	0.875	0.884	2 - 3/4 36 - 2 1/2	1.063	0.500	0.824	2 - 3/4 36 - 2 1/2	1.063	0.906	3/4 2 1/2 - 1 36 - 3
1	1.063	1.097	1 1/4 - 1 4 - 1 1/2 36 - 5	1.313	0.500	1.049	1 3 1/2 - 1 1/4 36 - 4	1.313	1.141	1 2 - 1 1/4 4 - 2 1/2 36 - 3
1 1/4	1.250	1.442	1 1/2 - 1 1/4 2 1/2 - 2 6 - 3 36 - 8	1.313	0.500	1.380	1 1/4 2 - 1 1/2 6 - 2 1/2 36 - 8	1.313	1.484	1 1 /2 - 1 1/4 3 1/2 - 2 8 - 4 36 - 10
1 1/2	1.313	1.682	1 1/2 2 3 - 2 1/2 10 - 3 1/2 36 - 12	1.375	0.500	1.610	1 1/2 3 - 2 8 - 3 1/2 36 - 10	1.375	1.719	1 1/2 2 3 1/2 - 2 1/2 10 - 4 36 - 12
2	1.500	2.157	2 3 - 2 1/2 5 - 3 1/2 18 - 6 36 - 20	1.500	0.625	2.067	2 3 - 2 1/2 6 - 3 1/2 16 - 8 36 - 18	1.500	2.188	2 2 1/2 4 - 3 10 - 5 18 - 12 36 - 20

LOW WELD VOLUME LATERAL BRANCHETTES®

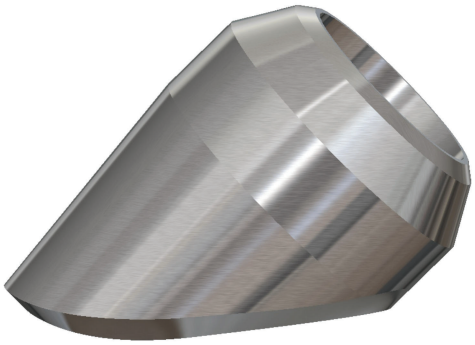

SIZE : 1/2 - 2 IDENTIFICATION: SCH.10s, SCH.40s CL.3000

MATERIAL : STAINLESS F304L & F316L

PRODUCT CONFORMITY : MSS SP-97, ASME B16.11, ASME B1.20.1 (NPT), ASME B31.1, ASME B31.3

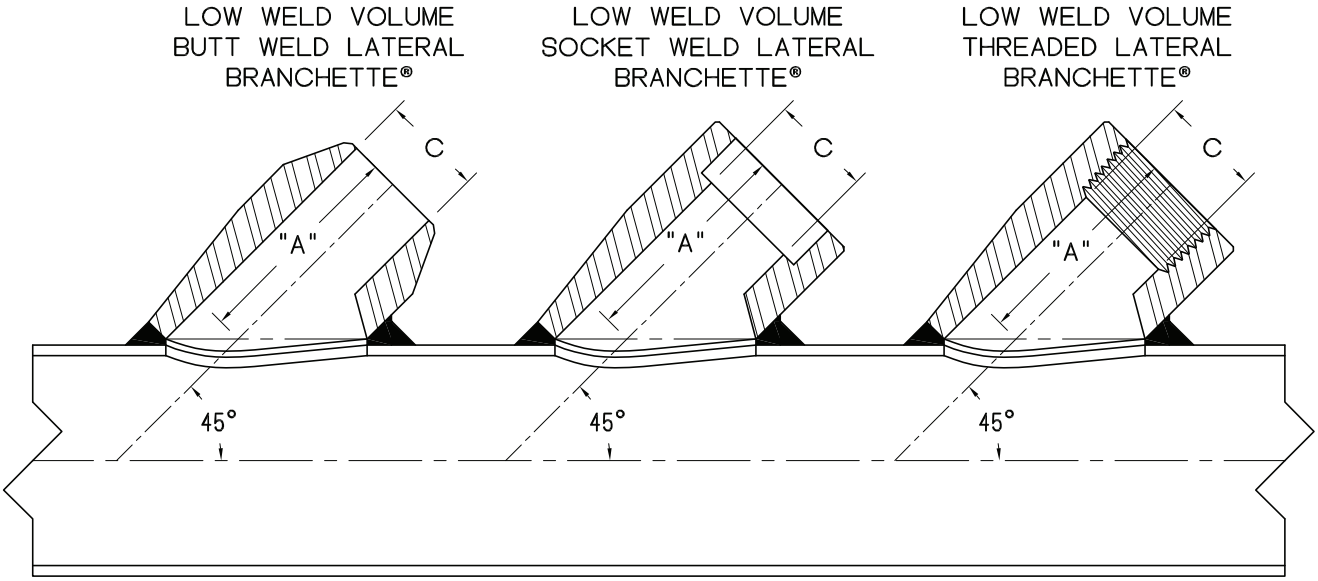

REFERENCE:
ASME B31.1 PAR. 127.4.8 FIG 127.4.8(E)(c)

BASIC DIMENSIONS AND CONSOLIDATIONS										
NPS	SCH.10s BUTT WELD			SOCKET WELD				THREADED		
	A	C	CONSOLIDATION	A	B	C	CONSOLIDATION	A	C	CONSOLIDATION
1/2	1.563	0.674	1/2 36 - 3/4	1.563	0.375	0.622	1/2 36 - 3/4	1.563	0.703	3/4 - 1/2 36 - 1
3/4	1.813	0.884	1 1/4 - 3/4 36 - 1 1/2	1.875	0.500	0.824	1 - 3/4 36 - 1 1/4	1.872	0.906	3/4 1 1/4 - 1 36 - 1 1/2
1	2.188	1.097	1 2 - 1 1/4 36 - 2 1/2	2.188	0.500	1.049	1 1 1/2 - 1 1/4 36 - 2	2.188	1.141	1 2 - 1 1/4 36 - 2 1/2
1 1/4	2.188	1.442	1 1/2 - 1 1/4 3 1/2 - 2 36 - 4	2.500	0.500	1.380	1 1/2 - 1 1/4 3 - 2 36 - 3 1/2	2.500	1.484	1 1/4 2 - 1 1/2 4 - 2 1/2 36 - 5
1 1/2	2.563	1.682	1 1/2 2 1/2 - 2 5 - 3 36 - 6	2.563	0.500	1.610	2 - 1 1/2 4 - 2 1/2 36 - 5	2.563	1.719	1 1/2 2 1 /2 - 2 5 - 3 36 - 6
2	2.938	2.157	2 2 1/2 4 - 3 8 - 5 36 - 10	3.063	0.625	2.067	2 2 1/2 3 1/2 - 3 6 - 4 36 - 8	3.063	2.188	2 2 1/2 3 4 - 3 1/2 8 - 5 36 - 10

NOTES : 1. LARGER SIZES AND SPECIAL DIMENSIONS AVAILABLE

LOW WELD VOLUME ELBOW BRANCHETTE®

SIZE : 1/2 - 2 IDENTIFICATION: SCH.10s, SCH.40s CL.3000

MATERIAL : STAINLESS F304L & F316L

PRODUCT CONFORMITY : MSS SP-97, ASME B16.11, ASME B1.20.1 (NPT), ASME B31.1, ASME B31.3

LOW WELD VOLUME BUTT WELD ELBOW BRANCHETTE®

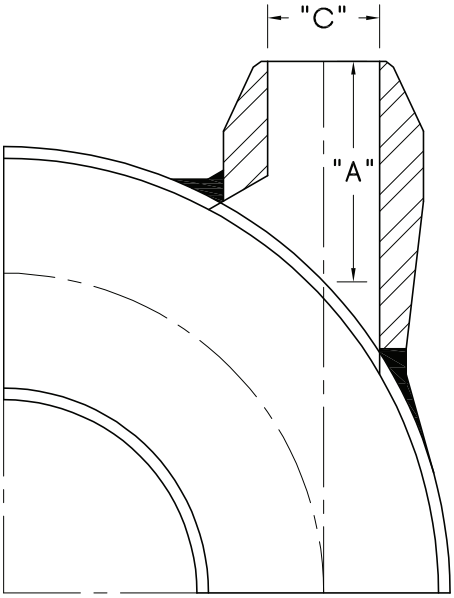

LOW WELD VOLUME SOCKET WELD ELBOW BRANCHETTE®

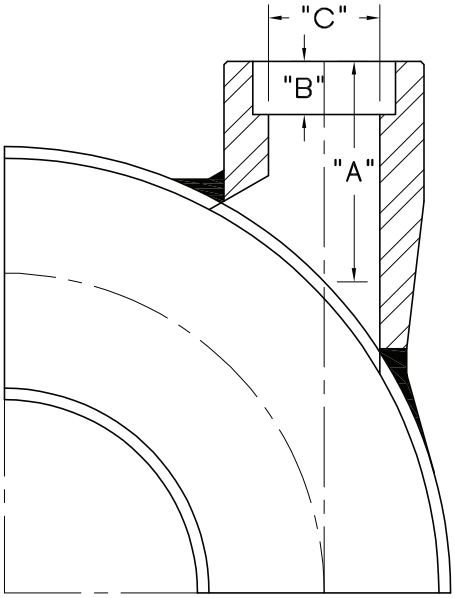

LOW WELD VOLUME THREADED ELBOW BRANCHETTE®

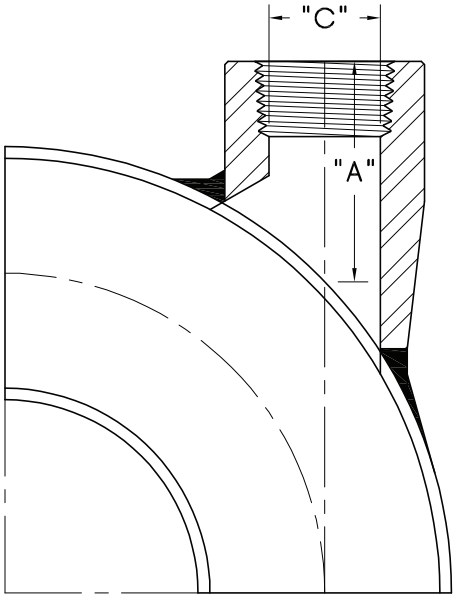

WELDING REFERENCE:
ASME B31.1 PAR. 127.4.8 FIG 127.4.8(E)(b)

BASIC DIMENSIONS AND CONSOLIDATIONS										
NPS	SCH.10s BUTT WELD			SOCKET WELD				THREADED		
	A	C	CONSOLIDATION	A	B	C	CONSOLIDATION	A	C	CONSOLIDATION
1/2	1.188	0.674	36 - 3/4	1.563	0.375	0.622	36 - 3/4	1.375	0.703	36 - 3/4
3/4	1.375	0.884	36 - 1	1.875	0.500	0.824	36 - 1	1.563	0.906	36 - 1
1	1.688	1.097	36 - 2	2.188	0.500	1.049	36 - 2	1.938	1.141	36 - 2
1 1/4	2.063	1.442	36 - 2	2.500	0.500	1.380	36 - 2	2.125	1.484	36 - 2
1 1/2	2.250	1.682	36 - 2	2.563	0.500	1.610	36 - 2	2.313	1.719	36 - 2
2	2.625	2.157	36 - 3	3.063	0.625	2.067	36 - 3	2.688	2.188	36 - 3

NOTES : 1. LARGER SIZES AND SPECIAL DIMENSIONS AVAILABLE

HVAC BRANCHETTE®

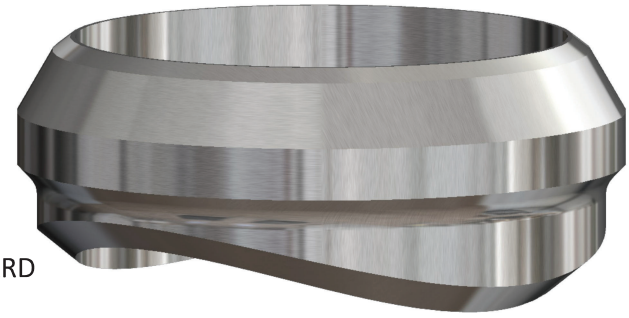

SIZE: 4 - 24 **IDENTIFICATION** : SCH.10s, SCH.40s, STANDARD
MATERIAL : A105, F304/L, F316/L
PRODUCT CONFORMITY : MSS SP-97, ASME B31.9

NOW AVAILABLE IN 4" THROUGH 24" STANDARD WEIGHT OUTLETS. THE WOI HVAC BRANCHETTE® IS DESIGNED SPECIFICALLY FOR LOW PRESSURE BUILDING SERVICE APPLICATIONS. THEY REQUIRE LESS WELD THAN CONVENTIONAL BRANCH OUTLET FITTINGS, THEREFORE THEY ARE MORE ECONOMICAL TO INSTALL. YOU CAN NOW SIGNIFICANTLY REDUCE YOUR COSTS BY SPECIFYING THE WOI BUTTWELD HVAC BRANCHETTE®

BASIC DIMENSIONS							
NPS	HVAC BRANCHETTE			NPS	HVAC BRANCHETTE		
	OD	ID	A		OD	ID	A
4	4.500	4.026	2.000	14	14.000	13.250	3.500
5	5.563	5.047	2.250	16	16.000	15.250	3.688
6	6.625	6.065	2.375	18	18.000	17.250	3.813
8	8.625	7.981	2.750	20	20.000	19.250	4.000
10	10.750	10.020	3.063	22	22.000	21.250	4.375
12	12.750	12.000	3.375	24	24.000	23.250	4.563

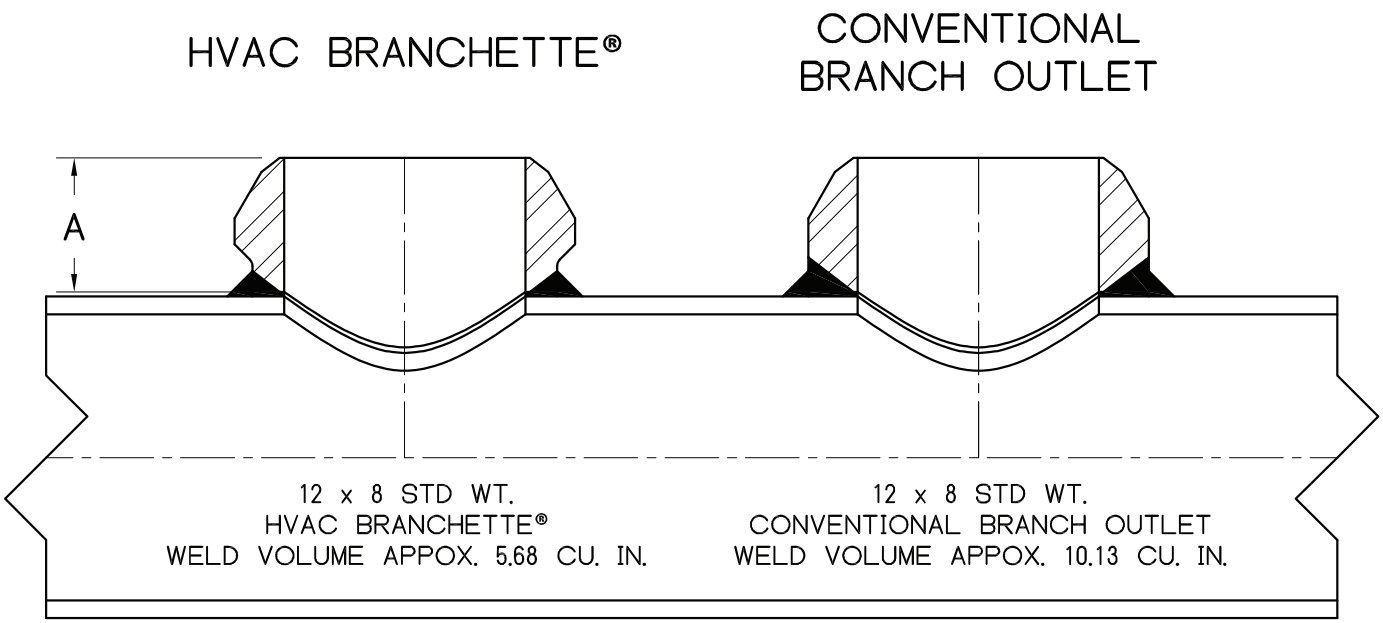

NOTES: 1 SPECIAL SIZES AND DIMENSIONS AVAILABLE

HVAC GROOVETTE®

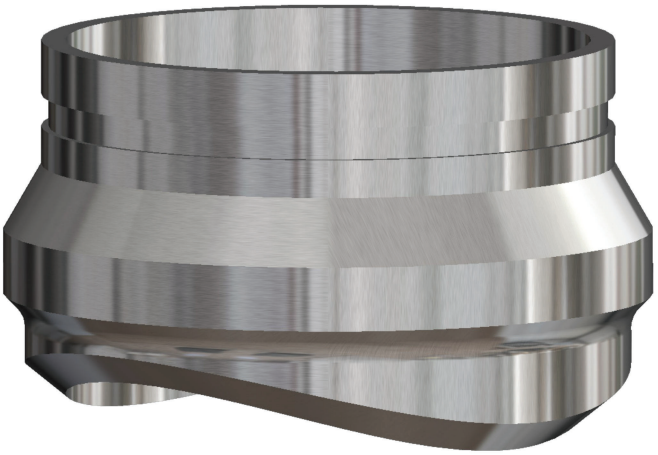

SIZE: 4 - 24 **IDENTIFICATION** : SCH.10s, SCH.40s, STANDARD
MATERIAL : A105, F304/L, F316/L
PRODUCT CONFORMITY : MSS SP-97, ASME B31.9

HVAC GROOVETTE®

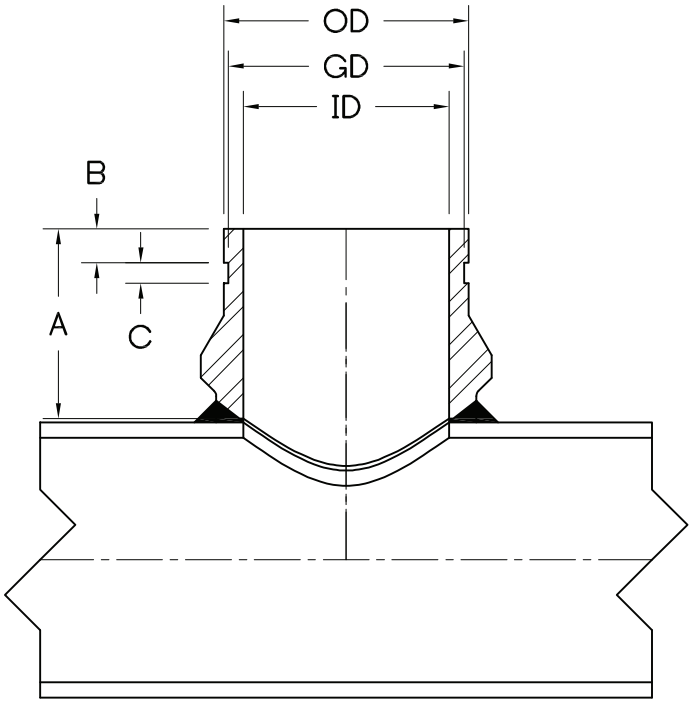

NOW AVAILABLE IN 4" THROUGH 24" GROOVED-END OUTLETS DESIGNED SPECIFICALLY FOR USE WITH GROOVED-END MECHANICAL PIPING SYSTEMS. THE WOI GROOVETTE® UTILIZES A STRAIGHT BORE DESIGN WITH AN INDUSTRY STANDARD MACHINED GROOVE. IT IS DESIGNED TO HAVE A CONSISTENT HEIGHT FROM THE OD OF THE RUN PIPE TO THE GROOVE. THE WOI GROOVETTE® ELIMINATES THE NEED FOR WELDING A GROOVED NIPPLE TO A STANDARD OUTLET FITTING. THE WOI GROOVETTE® IS PRODUCED IN A105, A182 F304/L, A182 F316/L MATERIALS, AND CAN BE MANUFACTURED FROM OTHER MATERIALS UPON REQUEST.

BASIC DIMENSIONS						
NPS	OD	GD	ID	A	B	C
4	4.500	4.334	4.026	3.375	0.625	0.375
5	5.563	5.395	5.047	3.625	0.625	0.375
6	6.625	6.455	6.065	3.750	0.625	0.375
8	8.625	8.441	7.981	4.375	0.750	0.438
10	10.750	10.562	10.020	4.750	0.750	0.500
12	12.750	12.531	12.000	5.125	0.750	0.500
14	14.000	13.781	13.250	5.500	0.938	0.500
16	16.000	15.781	15.250	5.688	0.938	0.500
18	18.000	17.781	17.250	5.875	1.000	0.500
20	20.000	19.781	19.250	6.063	1.000	0.500
22	22.000	21.656	21.250	6.500	1.000	0.563
24	24.000	23.656	23.250	6.750	1.000	0.563

NOTES: 1. SPECIAL DIMENSIONS AVAILABLE
2. GROOVE DIMENSIONS ARE IN ACCORDANCE WITH INDUSTRY STANDARD CUT GROOVE DETAILS

ADVANTAGES

ELIMINATE A COSTLY REDUCING TEE, TWO COUPLINGS AND TWO GASKETS.

NO MORE ALIGNMENT AND FIT UP PROBLEMS WHEN CONNECTING A GROOVED-END NIPPLE TO A BRANCH OUTLET.

ELIMINATE ONE GROOVED-END NIPPLE FOR ATTACHMENT TO A STANDARD BRANCH CONNECTION.

ELIMINATE ONE WELD AT NIPPLE TO BRANCH CONNECTION.

HEAVY WALL FITTNGS AND SPECIALTY ITEMS

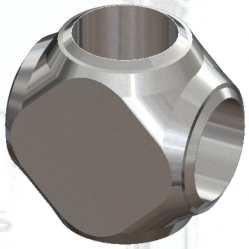

SEAMLESS BUTT WELD CROSS
DIMENSIONS: ASME B16.9
STYLES: STRAIGHT, REDUCING, CUSHION
SIZES: 1/2" THROUGH 24"
MATERIALS: ALL MATERIAL GRADES

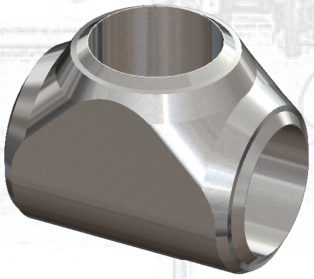

SEAMLESS BUTT WELD TEE
DIMENSIONS: ASME B16.9
STYLE: STRAIGHT, REDUCING, BULL, CUSHION
SIZES: 1/2" THROUGH 24"
MATERIALS: ALL MATERIAL GRADES

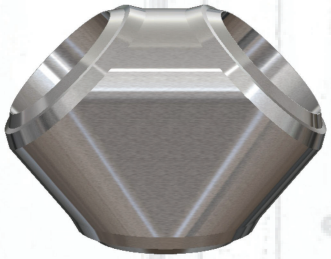

SEAMLESS BUTT WELD WYE
STYLES: STRAIGHT, REDUCING, ECCENTRIC
SIZES: 1/2" THROUGH 24"
MATERIALS: ALL MATERIAL GRADES

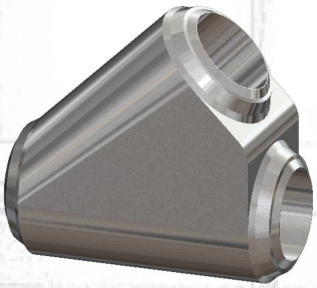

SEAMLESS BUTT WELD LATERAL
STYLES: STRAIGHT, REDUCING, ECCENTRIC
SIZES: 1/2" THROUGH 24"
MATERIALS: ALL MATERIAL GRADES

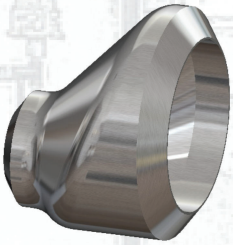

SEAMLESS REDUCERS
DIMENSIONS: ASME B16.9
STYLES: CONCENTRIC, ECCENTRIC,
EXTREME REDUCTIONS, HEAVY WALLS
MATERIALS: ALL MATERIAL GRADES

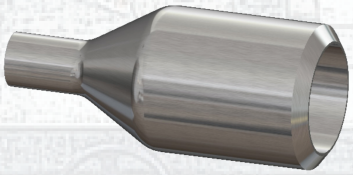

SWAGE NIPPLES
DIMENSIONS: MSS SP-25
STYLES: CONCENTRIC, ECCENTRIC,
EXTREME REDUCTIONS, HEAVY WALLS
MATERIALS: ALL MATERIAL GRADES

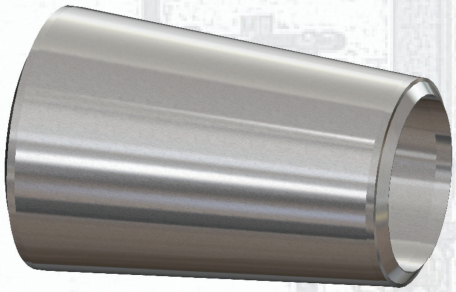

SEAMLESS TRANSITION PIECES
STYLES: CONCENTRIC, ECCENTRIC,
EXTREME REDUCTIONS, HEAVY WALLS
MATERIALS: ALL MATERIAL GRADES

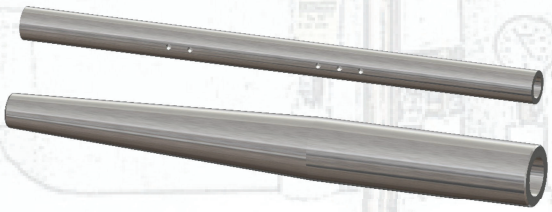

THERMOWELLS & SAMPLING NOZZLES
STYLES: SINGLE WELL, DOUBLE WELL,
STAGGERED ID, ANGULAR OFFSET OR STEPPED ID
MATERIALS: ALL MATERIAL GRADES

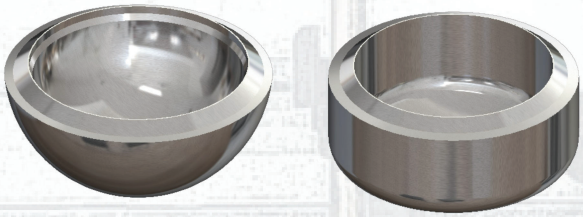

BUTT WELD CAP & HEMISPHERICAL HEADS
DIMENSIONS: ASME B16.9 & SECTION VIII-1
STYLES: UNCHARTED SIZES & HEAVY WALLS
MATERIALS: ALL MATERIAL GRADES

BLEED RINGS

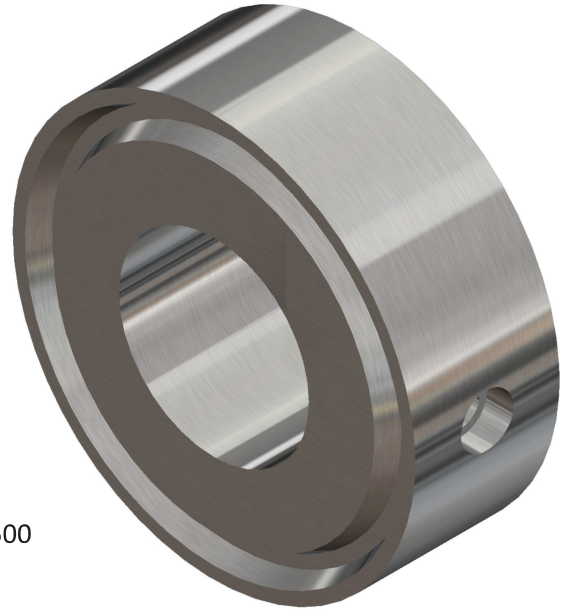

SIZE : 1 - 24 **IDENTIFICATION** : CL.150 THROUGH CL.2500
MATERIAL : ALL ASTM / ASME MATERIAL GRADES
PRODUCT CONFORMITY : ASME B16.5

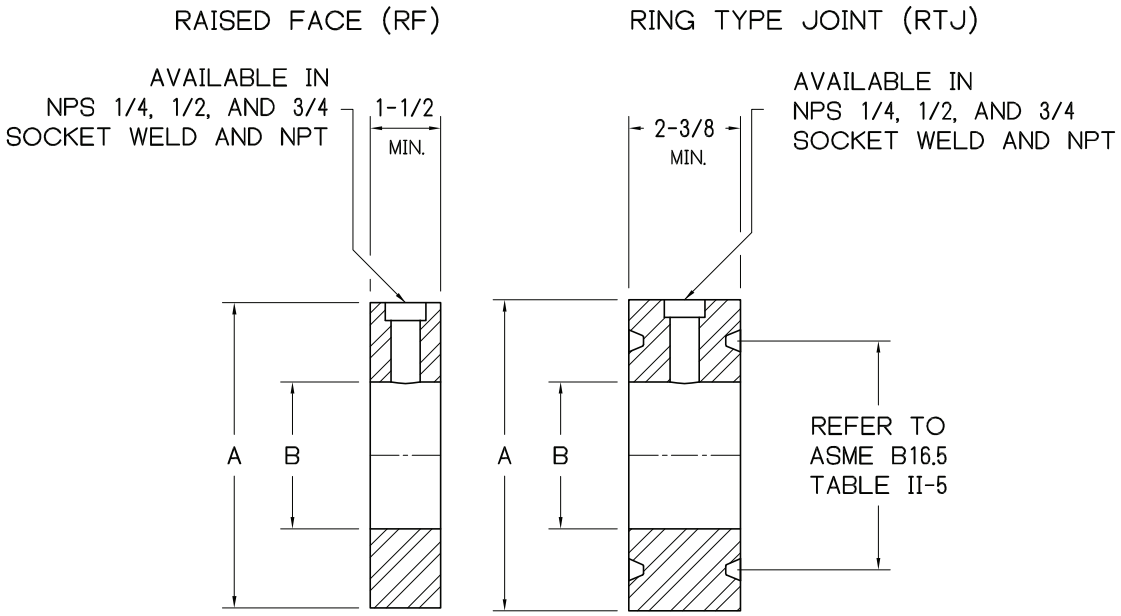

BASIC DIMENSIONS											
NPS	B	RAISED FACE "A" DIMENSION					RING TYPE JOINT "A" DIMENSION				
		CL.150	CL.300	CL.600	CL.900	CL.1500	CL.150	CL.300	CL.600	CL.900	CL.1500
1	1 1/8	2 1/2	2 3/4	2 3/4	3	3	2 1/2	2 3/4	2 3/4	2 13/16	2 13/16
1 1/2	1 5/8	3 1/4	3 5/8	3 5/8	3 3/4	3 3/4	3 1/4	3 9/16	3 9/16	3 5/8	3 5/8
2	2 1/8	4	4 1/4	4 1/4	5 1/2	5 1/2	4	4 1/4	4 1/4	4 7/8	4 7/8
2 1/2	2 1/2	4 3/4	5	5	6 3/8	6 3/8	4 3/4	5	5	5 3/8	5 3/8
3	3 1/8	5 1/4	5 3/4	5 3/4	6 1/2	6 3/4	5 1/4	5 3/4	5 3/4	6 5/8	6 5/8
4	4 1/8	6 3/4	7	7 1/2	8	8 1/8	6 3/4	6 7/8	6 7/8	7 5/8	7 5/8
6	6 1/8	8 5/8	9 3/4	10 3/8	11 1/4	11	8 5/8	9 1/2	9 1/2	9 1/2	9 3/4

NOTES: SPECIAL DIMENSIONS AVAILABLE
MULTIPLE TAPS AVAILABLE AND SPECIAL ORIENTATIONS AVAILABLE
LARGER TAPS AVAILABLE, HOWEVER RING THICKNESS MAY NEED TO BE INCREASED ACCORDINGLY

STUDDING OUTLETS

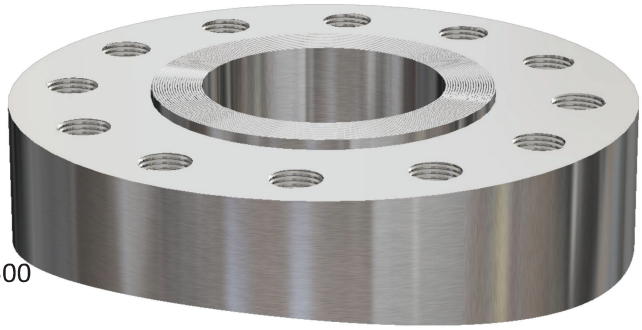

SIZE : 1/2 - 24 **IDENTIFICATION** : CL.150 THROUGH CL.2500
MATERIAL : ALL ASTM / ASME MATERIAL GRADES
PRODUCT CONFORMITY : ASME B16.5

STUDDING OUTLETS ARE AVAILABLE IN SIZES 1/2 THROUGH 24" FROM CL.150 TO 2500. THEY CAN BE PROVIDED AS FLAT OR CONTOURED TO FIT THE OD OR ID OF SHELLS, HEADS, OR CONES. OFFSETS FROM VESSEL / HEAD CENTERLINES CAN ALSO BE ACCOMMODATED. SPECIAL MACHINING FOR SIGHT GLASS ASSEMBLIES IN ACCORDANCE WITH YOUR SPECIFIED DIMENSIONS CAN BE ACCOMMIDATED. WE CAN ALSO PROVIDE AIR TEST HOLES UPON REQUEST.

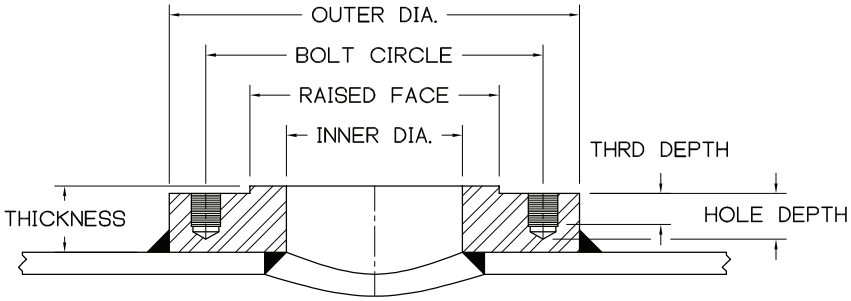

WELD PROFILE IN ACC. WITH ASME VIII-1 FIG. UW-16.1(p).
STUD HOLES SHOWN OUT OF TRUE POSITION. STUD HOLES WILL STRADDLE CENTERLINE

CLASS 150										
NPS (Inner Dia.)	Flange Thickness	Outer Diameter	Raised Face	Bolt Circle	No. of Holes	Hole Size	Hole Depth	STUD BOLT		
								Thrd Size	T.P.I.	Thrd Depth
1/2	1.250	3.500	1.375	2.375	4	27/64	0.875	1/2	13	0.563
3/4	1.250	3.875	1.688	2.750	4	27/64	0.875	1/2	13	0.563
1	1.250	4.250	2.000	3.125	4	27/64	0.875	1/2	13	0.563
1 1/4	1.250	4.625	2.500	3.500	4	27/64	0.875	1/2	13	0.563
1 1/2	1.250	5.000	2.875	3.875	4	27/64	0.875	1/2	13	0.563
2	1.500	6.000	3.625	4.750	4	17/32	1.125	5/8	11	0.750
2 1/2	1.500	7.000	4.125	5.500	4	17/32	1.125	5/8	11	0.750
3	1.500	7.500	5.000	6.000	4	17/32	1.125	5/8	11	0.750
3 1/2	1.500	8.500	5.500	7.000	8	17/32	1.125	5/8	11	0.750
4	1.500	9.000	6.188	7.500	8	17/32	1.125	5/8	11	0.750
5	1.750	10.000	7.313	8.500	8	21/32	1.313	3/4	10	0.875
6	1.750	11.000	8.500	9.500	8	21/32	1.313	3/4	10	0.875
8	1.750	13.500	10.625	11.750	8	21/32	1.313	3/4	10	0.875
10	1.813	16.000	12.750	14.250	12	49/64	1.438	7/8	9	1.000
12	1.813	19.000	15.000	17.000	12	49/64	1.438	7/8	9	1.000

CLASS 300										
NPS (Inner Dia.)	Flange Thickness	Outer Diameter	Raised Face	Bolt Circle	No. of Holes	Hole Size	Hole Depth	STUD BOLT		
								Thrd Size	T.P.I.	Thrd Depth
1/2	1.250	3.750	1.375	2.625	4	27/64	0.875	1/2	13	0.563
3/4	1.500	4.625	1.688	3.250	4	17/32	1.125	5/8	11	0.750
1	1.500	4.875	2.000	3.500	4	17/32	1.125	5/8	11	0.750
1 1/4	1.500	5.250	2.500	3.875	4	17/32	1.125	5/8	11	0.750
1 1/2	1.750	6.125	2.875	4.500	4	21/32	1.313	3/4	10	0.875
2	1.500	6.500	3.625	5.000	8	17/32	1.125	5/8	11	0.750
2 1/2	1.750	7.500	4.125	5.875	8	21/32	1.313	3/4	10	0.875
3	1.750	8.250	5.000	6.625	8	21/32	1.313	3/4	10	0.875
3 1/2	1.750	9.000	5.500	7.250	8	21/32	1.313	3/4	10	0.875
4	1.750	10.000	6.188	7.875	8	21/32	1.313	3/4	10	0.875
5	1.750	11.000	7.313	9.250	8	21/32	1.313	3/4	10	0.875
6	1.750	12.500	8.500	10.625	12	21/32	1.313	3/4	10	0.875
8	1.875	15.000	10.625	13.000	12	49/64	1.438	7/8	9	1.000
10	2.125	17.500	12.750	15.250	16	7/8	1.563	1	8	1.125
12	2.250	20.500	15.000	17.750	16	1	1.813	1 1/8	8	1.250

CLASS 600										
NPS (Inner Dia.)	Flange Thickness	Outer Diameter	Raised Face	Bolt Circle	No. of Holes	Hole Size	Hole Depth	STUD BOLT		
								Thrd Size	T.P.I.	Thrd Depth
1/2	1.500	3.750	1.375	2.625	4	27/64	0.875	1/2	13	0.563
3/4	1.750	4.625	1.688	3.250	4	17/32	1.125	5/8	11	0.750
1	1.750	4.875	2.000	3.500	4	17/32	1.125	5/8	11	0.750
1 1/4	1.750	5.250	2.500	3.875	4	17/32	1.125	5/8	11	0.750
1 1/2	1.938	6.125	2.875	4.500	4	21/32	1.313	3/4	10	0.875
2	1.750	6.500	3.625	5.000	8	17/32	1.125	5/8	11	0.750
2 1/2	2.000	7.500	4.125	5.875	8	21/32	1.313	3/4	10	0.875
3	2.000	8.250	5.000	6.625	8	21/32	1.313	3/4	10	0.875
3 1/2	2.125	9.000	5.500	7.250	8	49/64	1.438	7/8	9	1.000
4	2.125	10.750	6.188	8.500	8	49/64	1.438	7/8	9	1.000
5	2.250	13.000	7.313	10.500	8	7/8	1.563	1	8	1.125
6	2.250	14.000	8.500	11.500	12	7/8	1.563	1	8	1.125
8	2.500	16.500	10.625	13.750	12	1	1.813	1 1/8	8	1.250
10	2.750	20.000	12.750	17.000	16	1 1/8	2.125	1 1/4	8	1.438
12	2.750	22.000	15.000	19.250	20	1 1/8	2.125	1 1/4	8	1.438

CLASS 900										
NPS (Inner Dia.)	Flange Thickness	Outer Diameter	Raised Face	Bolt Circle	No. of Holes	Hole Size	Hole Depth	STUD BOLT		
								Thrd Size	T.P.I.	Thrd Depth
1/2	2.000	4.750	1.375	3.250	4	21/32	1.313	3/4	10	0.875
3/4	2.000	5.125	1.688	3.500	4	21/32	1.313	3/4	10	0.875
1	2.125	5.875	2.000	4.000	4	49/64	1.438	7/8	9	1.000
1 1/4	2.125	6.250	2.500	4.375	4	49/64	1.438	7/8	9	1.000
1 1/2	2.250	7.000	2.875	4.875	4	7/8	1.563	1	8	1.125
2	2.125	8.500	3.625	6.500	8	49/64	1.438	7/8	9	1.000
2 1/2	2.250	9.625	4.125	7.500	8	7/8	1.563	1	8	1.125
3	2.125	9.500	5.000	7.500	8	49/64	1.438	7/8	9	1.000
4	2.500	11.500	6.188	9.250	8	1	1.813	1 1/8	8	1.250
5	2.750	13.750	7.313	11.000	8	1 1/8	2.125	1 1/4	8	1.438
6	2.500	15.000	8.500	12.500	12	1	1.813	1 1/8	8	1.250
8	3.000	18.500	10.625	15.500	12	1 1/4	2.250	1 3/8	8	1.563
10	3.000	21.500	12.750	18.500	16	1 1/4	2.250	1 3/8	8	1.563
12	3.000	24.000	15.000	21.000	20	1 1/4	2.250	1 3/8	8	1.563

CLASS 1500										
NPS (Inner Dia.)	Flange Thickness	Outer Diameter	Raised Face	Bolt Circle	No. of Holes	Hole Size	Hole Depth	STUD BOLT		
								Thrd Size	T.P.I.	Thrd Depth
1/2	2.000	4.750	1.375	3.250	4	21/32	1.313	3/4	10	0.875
3/4	2.000	5.125	1.688	3.500	4	21/32	1.313	3/4	10	0.875
1	2.125	5.875	2.000	4.000	4	49/64	1.438	7/8	9	1.000
1 1/4	2.125	6.250	2.500	4.375	4	49/64	1.438	7/8	9	1.000
1 1/2	2.250	7.000	2.875	4.875	4	7/8	1.563	1	8	1.125
2	2.125	8.500	3.625	6.500	8	49/64	1.438	7/8	9	1.000
2 1/2	2.250	9.625	4.125	7.500	8	7/8	1.563	1	8	1.125
3	2.500	10.500	5.000	8.000	8	1	1.813	1 1/8	8	1.250
4	2.750	12.250	6.188	9.500	8	1 1/8	2.125	1 1/4	8	1.438
5	3.125	14.750	7.313	11.500	8	1 3/8	2.375	1 1/2	8	1.688
6	3.000	15.500	8.500	12.500	12	1 1/4	2.250	1 3/8	8	1.563
8	3.500	19.000	10.625	15.500	12	1 1/2	2.563	1 5/8	8	1.875
10	3.875	23.000	12.750	19.000	12	1 3/4	3.000	1 7/8	8	2.125
12	4.125	26.500	15.000	22.500	16	1 7/8	3.313	2	8	2.250

CLASS 2500										
NPS (Inner Dia.)	Flange Thickness	Outer Diameter	Raised Face	Bolt Circle	No. of Holes	Hole Size	Hole Depth	STUD BOLT		
								Thrd Size	T.P.I.	Thrd Depth
1/2	2.000	5.250	1.375	3.500	4	21/32	1.313	3/4	10	0.875
3/4	2.000	5.500	1.688	3.750	4	21/32	1.313	3/4	10	0.875
1	2.125	6.250	2.000	4.250	4	49/64	1.438	7/8	9	1.000
1 1/4	2.250	7.250	2.500	5.125	4	7/8	1.563	1	8	1.125
1 1/2	2.500	8.000	2.875	5.750	4	1	1.813	1 1/8	8	1.250
2	2.250	9.250	3.625	6.750	8	7/8	1.563	1	8	1.125
2 1/2	2.500	10.500	4.125	7.750	8	1	1.813	1 1/8	8	1.250
3	2.750	12.000	5.000	9.000	8	1 1/8	2.125	1 1/4	8	1.438
4	3.250	14.000	6.188	10.750	8	1 3/8	2.375	1 1/2	8	1.688
5	3.750	16.500	7.313	12.750	8	1 5/8	2.813	1 3/4	8	2.000
6	4.125	19.000	8.500	14.500	8	1 7/8	3.313	2	8	2.250
8	4.375	21.750	10.625	17.250	12	1 7/8	3.313	2	8	2.250
10	5.125	26.500	12.750	21.250	12	2 3/8	4.000	2 1/2	8	2.813
12	5.500	30.000	15.000	24.375	12	2 5/8	4.375	2 3/4	8	3.125

VARIOUS STUDDING OUTLET CONFIGURATIONS

SET ON STUDDING OUTLET

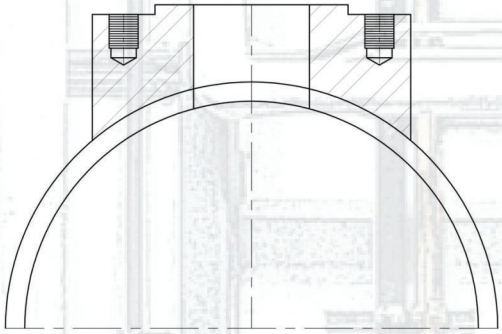

SET IN STUDDING OUTLET

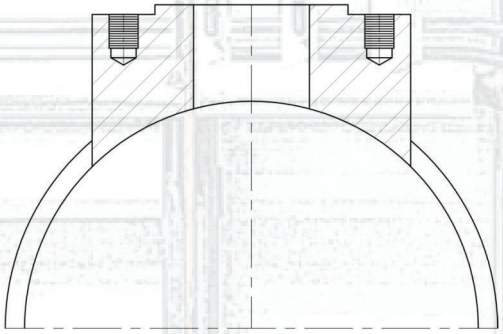

HEAD MOUNT STUDDING OUTLET

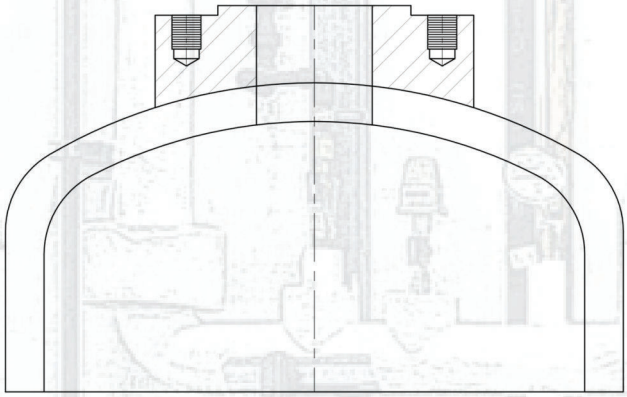

SET IN STUDDING OUTLET
WITH INSERT BEVELS

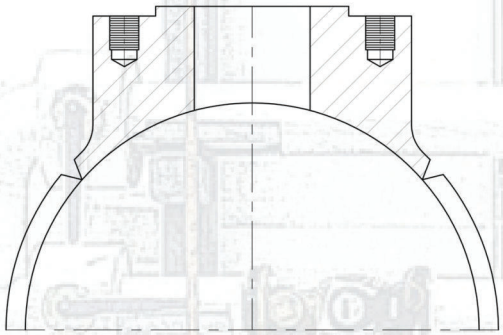

TAPERED BARREL STUDDING OUTLET

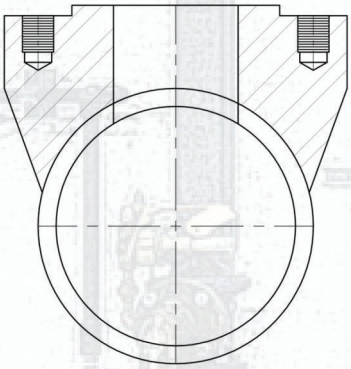

WRAP AROUND STUDDING OUTLET

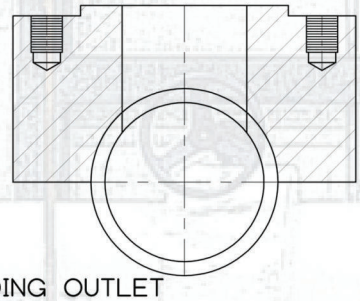

HILL SIDE STUDDING OUTLET

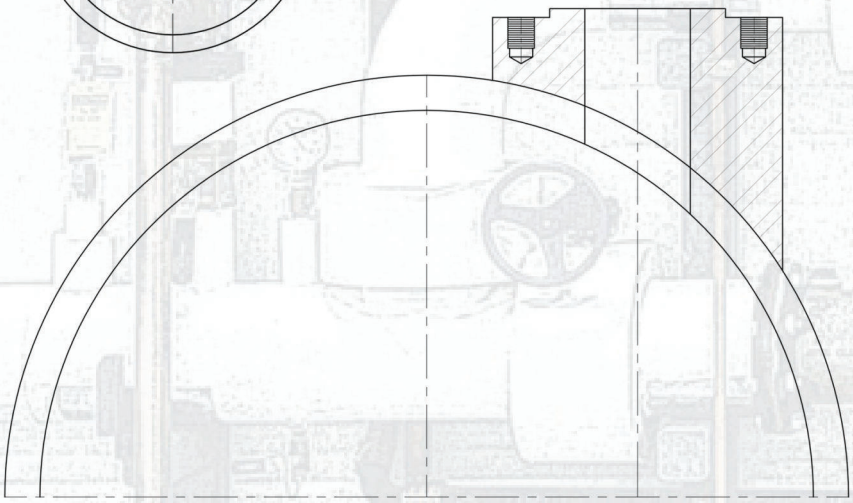

NOTE: STUD HOLES SHOWN OUT OF TRUE POSITION FOR ILLUSTRATION PURPOSES, STUD HOLES WILL STRADDLE CENTERLINE

MARKING DETAIL AND COMMON WOI ABBREVIATIONS

BWB	BUTT WELD BRANCHETTE®
SWB	SOCKET WELD BRANCHETTE®
THB	THREADED BRANCHETTE®
BLB	BUTT WELD LATERAL BRANCHETTE®
SLB	SOCKET WELD LATERAL BRANCHETTE®
TLB	THREADED LATERAL BRANCHETTE®
BEB	BUTT WELD ELBOW BRANCHETTE®
SEB	SOCKET WELD ELBOW BRANCHETTE®
TEB	THREADED ELBOW BRANCHETTE®
BIB	BUTT WELD INSERT BRANCHETTE®
SIB	SOCKET WELD INSERT BRANCHETTE®
TIB	THREADED INSERT BRANCHETTE®
BNB	BEVELED NIPPLE BRANCHETTE®
PNB	PLAIN NIPPLE BRANCHETTE®
TNB	THREADED NIPPLE BRANCHETTE®
FLB	FLANGED BRANCHETTE®
FIB	FLANGED INSERT BRANCHETTE®
CBWB	COMBINATION WELD BOSS
SWWB	SOCKET WELD WELD BOSS
THWB	THREADED WELD BOSS
CBCB	COMBINATION COUPLET BOSS
SWCB	SOCKET WELD COUPLET BOSS
THCB	THREADED COUPLET BOSS
SRVIB	SAFETY RELIEF VALVE INSERT BRANCHETTE®
LWV	LOW WELD VOLUME

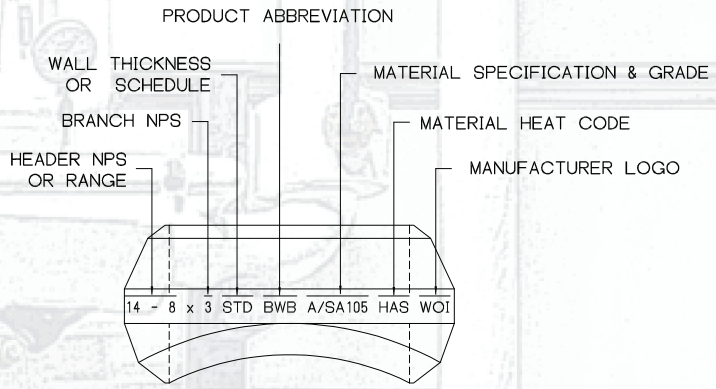

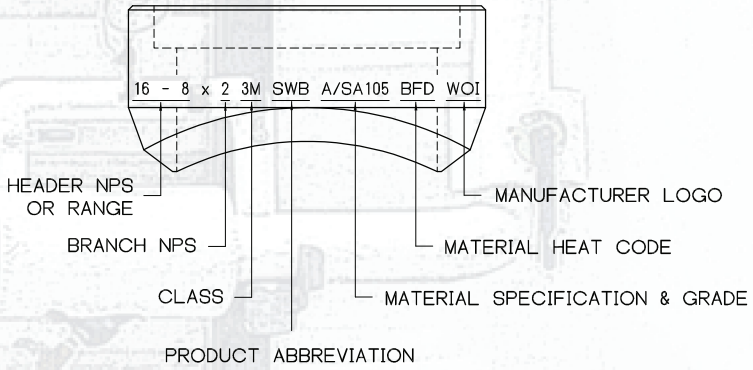

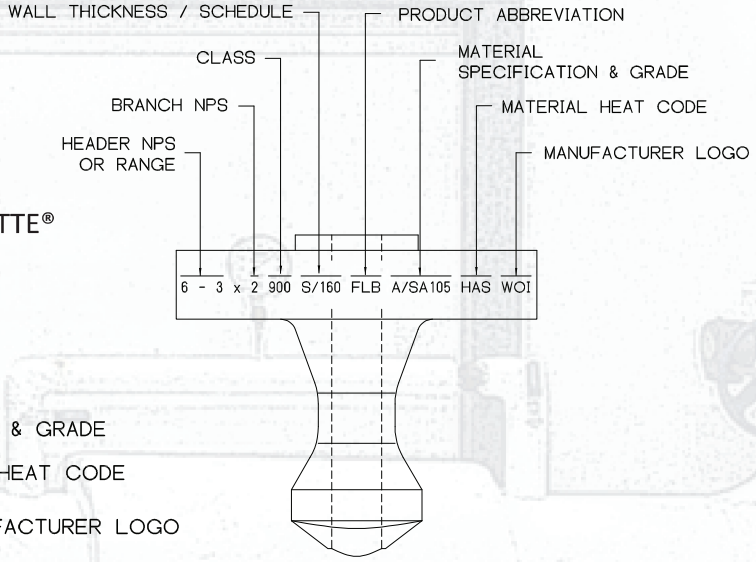

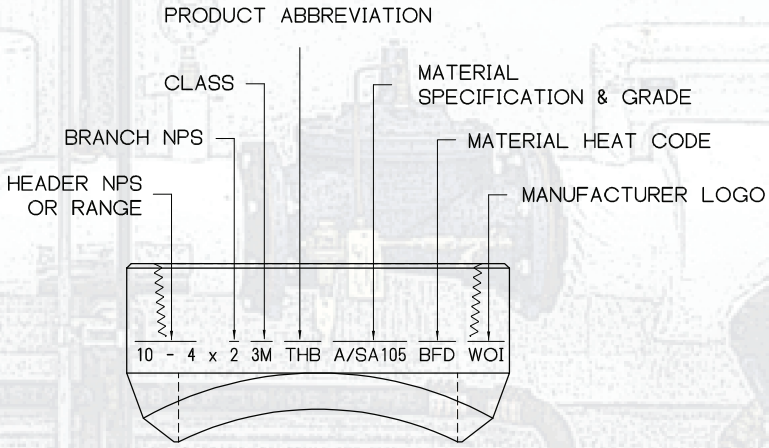

CONSOLIDATION CHART

TRUE - STRAIGHT BORE DESIGN
STAINLESS - CHROME - ALLOY BRANCHETTES®
NON-IMPRESSION DIE FORGED

SCH.10s BUTT WELD BRANCHETTE®									
1/2	3/4	1	1 1/4	1 1/2	2	2 1/2	3	4	6
1 1/4 - 1/2	2 - 3/4	1 1/4 - 1	1 1/2 - 1 1/4	1 1/2	2	2 1/2	3	4	6
36 - 1 1 /2	36 - 2 1/2	4 - 1 1/2	2 1/2 - 2	2	3 - 2 1/2	3 1/2 - 3	3 1/2	5	8
		36 - 5	6 - 3	3 - 2 1/2	5 - 3 1/2	5 - 4	4	6	10
			36 - 8	10 - 3 1/2	18 - 6	10 - 6	6 - 5	10 - 8	14 - 12
				36 - 12	36 - 20	26 - 12	14 - 8	18 - 12	18 - 16
						36 - 28	40 - 16	36 - 20	26 - 20
							84 - 42	84 - 38	42 - 28
									84 - 44

SCH.160 & CL.6M BUTT WELD & SOCKET WELD BRANCHETTE®					
1/2	3/4	1	1 1/4	1 1/2	2
1/2	1 - 3/4	2 - 1	1 1/4	2 1/2 - 1 1/2	2
36 - 3/4	36 - 1 1/4	36 - 2 1/2	4 - 1 1/2	6 - 3	3 - 2 1/2
			36 - 5	36 - 8	10 - 3 1/2
					36 - 12

STANDARD, SCH.40s, & CL.3M BUTT WELD BRANCHETTE® & SOCKET WELD BRANCHETTE®									
1/2	3/4	1	1 1/4	1 1/2	2	2 1/2	3	4	6
1 - 1/2	2 - 3/4	1	1 1/4	1 1/2	2	2 1/2	3	4	6
36 - 1 1/4	36 - 2 1/2	3 1/2 - 1 1/4	2 - 1 1/2	3 - 2	3 - 2 1/2	3 1/2 - 3	4 - 3 1/2	5	8
		36 - 4	6 - 2 1/2	8 - 3 1/2	6 - 3 1/2	5 - 4	6 - 5	6	10
			36 - 8	36 - 10	16 - 8	12 - 6	14 - 8	10 - 8	14 - 12
					36 - 18	24 - 14	36 - 16	20 - 12	18 - 16
						36 - 26		64 - 22	24 - 20
									34 - 26
									42 - 36

XX-STRONG & CL.9M BUTT WELD & SOCKET WELD BRANCHETTE®					
1/2	3/4	1	1 1/4	1 1/2	2
36 - 1/2	3/4	1	2 1/2 - 1 1/4	2 1/2 - 1 1/2	2 1/2 - 2
	36 - 1	36 - 1 1/4	36 - 3	3 1/2 - 3	6 - 3
				36 - 4	36 - 8

EXTRA STRONG & SCH.80s BUTT WELD BRANCHETTE®									
1/2	3/4	1	1 1/4	1 1/2	2	2 1/2	3	4	6
3/4 - 1/2	1 1/2 - 3/4	1	1 1/4	1 1/2	2	2 1/2	3	4	6
36 - 1	36 - 2	3 - 1 1/4	4 - 1 1/2	2 1/2 - 2	2 1/2	3 1/2 - 3	4 - 3 1/2	5	8
		36 - 3 1/2	36 - 5	8 - 3	4 - 3	6 - 4	6 - 5	6	10
				36 - 10	14 - 5	24 - 8	10 - 8	10 - 8	14 - 12
					36 - 16	36 - 26	32 - 12	22 - 12	18 - 16
							36 - 34	56 - 24	24 - 20
									34 - 26
									42 - 36

CL.3M, CL.6M, & CL.10M THREADED BRANCHETTE®					
1/2	3/4	1	1 1/4	1 1/2	2
1/2	3/4	1	1 1/2 - 1 1/4	1 1/2	2
1 1/2 - 3/4	2 1/2 - 1	2 - 1 1/4	3 1/2 - 2	2	2 1/2
36 - 2	36 - 3	4 - 2 1/2	8 - 4	3 1/2 - 2 1/2	4 - 3
		36 - 5	36 - 10	10 - 4	10 - 5
				36 - 12	18 - 12
					36 - 20

TRUE - STRAIGHT BORE DESIGN
CARBON STEEL A/SA105 BRANCHETTES®
IMPRESSION DIE FORGED

STANDARD BUTT WELD BRANCHETTE®								
1/2	3/4	1	1 1/4	1 1/2	2	2 1/2	3	4
36 - 1 1/4	36 - 2 1/2	36 - 2	36 - 8	36 - 4	36 - 8	36 - 12	36 - 16	36 - 22
1 - 1/2	2 - 3/4	3 1/2 - 1 1/4	6 - 2 1/2	3 1/2 - 2	6 - 3 1/2	10 - 5	14 - 8	20 - 12
		1	2 - 1 1/2	1 1/2	3 - 2 1/2	4 - 3	6 - 5	10 - 8
			1 1/4		2	2 1/2	4 - 3 1/2	6 - 5
							3	4

CL.3M SOCKET WELD BRANCHETTE®					
1/2	3/4	1	1 1/4	1 1/2	2
36 - 3/4	36 - 1 1/2	36 - 3	36 - 4	36 - 6	36 - 8
1/2	1 1/4 - 3/4	2 1/2 - 1 1/4	3 1/2 - 2	5 - 3	6 - 4
		1	1 1/2 - 1 1/4	2 1/2 - 2	3 1/2 - 2 1/2
				1 1/2	2

EXTRA STRONG BUTT WELD BRANCHETTE®								
1/2	3/4	1	1 1/4	1 1/2	2	2 1/2	3	4
36 - 1	36 - 2	36 - 2	36 - 6	36 - 4	36 - 8	36 - 12	36 - 16	36 - 22
3/4 - 1/2	1 1/2 - 3/4	3 - 1 1/4	5 - 2 1/2	3 1/2 - 2	6 - 3 1/2	10 - 5	14 - 8	20 - 12
		1	2 - 1 1/4	1 /2	3 - 2 1/2	4 - 3	6 - 5	10 - 8
					2	2 1/2	4 - 3 1/2	6 - 5
							3	4

CL.3M THREADED BRANCHETTE®					
1/2	3/4	1	1 1/4	1 1/2	2
36 - 3/4	36 - 1 1/2	36 - 3	36 - 4	36 - 6	36 - 8
1/2	1 1/4 - 3/4	2 1/2 - 1 1/4	3 1/2 - 2	5 - 3	6 - 4
		1	1 1/2 - 1 1/4	2 1/2 - 2	3 1/2 - 2 1/2
				1 1/2	2

INTEGRALLY REINFORCED BRANCH CONNECTIONS NPS 6 INCH AND SMALLER MANUFACTURED IN ACCORDANCE WITH MSS SP-97 BY WELDING OUTLETS INC. WILL TYPICALLY BE MANUFACTURED UTILIZING A "CONSOLIDATION" DESIGN. EACH FITTING IS DESIGNED TO FIT A NUMBER OF RUN PIPE SIZES, E.G. 1" FITTING MARKED 36 – 4 WILL FIT ALL RUN PIPE SIZES FROM 4" TO 36". WHEN PLACED ON A 36" RUN PIPE, THERE WILL BE A MAXIMUM RADIAL GAP OF 1/16" BETWEEN THE TOP OF THE RUN PIPE AND THE BASE OF THE FITTING AT THE CROTCH. ACCORDING TO MSS SP-97 PARAGRAPH 3.3: THE MANUFACTURER HAS THE OPTION TO CONSOLIDATE RUN SIZES FOR A GIVEN BRANCH FOR ECONOMIC REASONS, PROVIDED THE DESIGNATED CONSOLIDATION GAP DISTANCE BETWEEN THE RUN PIPE RADIUS AND THE FITTING INLET RADIUS DOES NOT EXCEED 1/16".

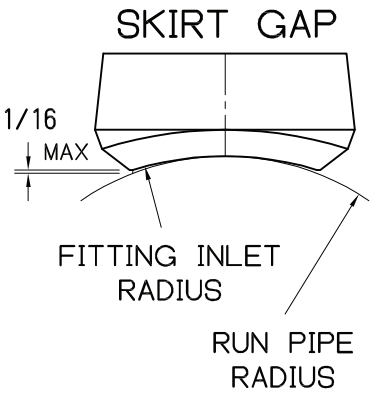

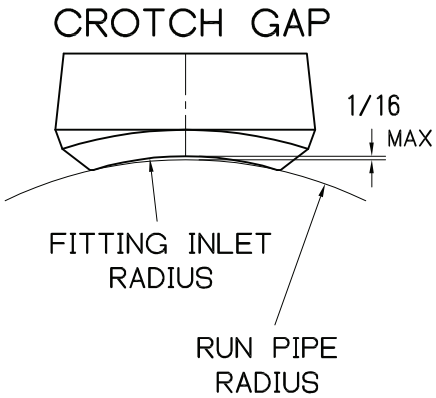

PIPE SIZES AND SCHEDULES

NPS	OD	PIPE SCHEDULE														
		5	10s	10	20	30	STD	40	60	XS	80	100	120	140	160	XXS
1/8	0.405		0.049 0.307	0.049 0.307		0.057 0.291	0.068 0.269	0.068 0.269		0.095 0.215	0.095 0.215					
1/4	0.540		0.065 0.410	0.065 0.410		0.073 0.394	0.088 0.364	0.088 0.364		0.119 0.302	0.119 0.302					
3/8	0.675		0.065 0.545	0.065 0.545		0.073 0.529	0.091 0.493	0.091 0.493		0.126 0.423	0.126 0.423					
1/2	0.840	0.065 0.710	0.083 0.674	0.083 0.674		0.095 0.650	0.109 0.622	0.109 0.622		0.147 0.546	0.147 0.546				0.188 0.464	0.294 0.252
3/4	1.050	0.065 0.920	0.083 0.884	0.083 0.884		0.095 0.860	0.113 0.824	0.113 0.824		0.154 0.742	0.154 0.742				0.219 0.612	0.308 0.434
1	1.315	0.065 1.185	0.109 1.097	0.109 1.097		0.114 1.087	0.133 1.049	0.133 1.049		0.179 0.957	0.179 0.957				0.250 0.815	0.358 0.599
1-1/4	1.660	0.065 1.530	0.109 1.442	0.109 1.442		0.117 1.426	0.140 1.380	0.140 1.380		0.191 1.278	0.191 1.278				0.250 1.160	0.382 0.896
1-1/2	1.900	0.065 1.770	0.109 1.682	0.109 1.682		0.125 1.650	0.145 1.610	0.145 1.610		0.200 1.500	0.200 1.500				0.281 1.338	0.400 1.100
2	2.375	0.065 2.245	0.109 2.157	0.109 2.157		0.125 2.125	0.154 2.067	0.154 2.067		0.218 1.939	0.218 1.939				0.344 1.687	0.436 1.503
2-1/2	2.875	0.083 2.709	0.120 2.635	0.120 2.635		0.188 2.499	0.203 2.469	0.203 2.469		0.276 2.323	0.276 2.323				0.375 2.125	0.552 1.771
3	3.500	0.083 3.334	0.120 3.260	0.120 3.260		0.188 3.124	0.216 3.068	0.216 3.068		0.300 2.900	0.300 2.900				0.438 2.624	0.600 2.300
3-1/2	4.000	0.083 3.834	0.120 3.760	0.120 3.760		0.188 3.624	0.226 3.548	0.226 3.548		0.318 3.364	0.318 3.364					
4	4.500	0.083 4.334	0.120 4.260	0.120 4.260		0.188 4.124	0.237 4.026	0.237 4.026		0.337 3.826	0.337 3.826		0.438 3.624		0.531 3.438	0.674 3.152
5	5.563	0.109 5.345	0.134 5.295	0.134 5.295			0.258 5.047	0.258 5.047		0.375 4.813	0.375 4.813		0.500 4.563		0.625 4.313	0.750 4.063
6	6.625	0.109 6.407	0.134 6.357	0.134 6.357			0.280 6.065	0.280 6.065		0.432 5.761	0.432 5.761		0.562 5.501		0.719 5.187	0.864 4.897
8	8.625	0.109 8.407	0.148 8.329	0.148 8.329	0.250 8.125	0.277 8.071	0.322 7.981	0.322 7.981	0.406 7.813	0.500 7.625	0.500 7.625	0.594 7.437	0.719 7.187	0.812 7.001	0.906 6.813	0.875 6.875
10	10.75	0.134 10.482	0.165 10.420	0.165 10.420	0.250 10.250	0.307 10.136	0.365 10.020	0.365 10.020	0.500 9.750	0.500 9.750	0.594 9.562	0.719 9.312	0.844 9.062	1.000 8.750	1.125 8.500	1.000 8.750
12	12.75	0.156 12.438	0.180 12.390	0.180 12.390	0.250 12.250	0.330 12.090	0.375 12.000	0.406 11.938	0.562 11.626	0.500 11.750	0.688 11.374	0.844 11.062	1.000 10.750	1.125 10.500	1.312 10.126	1.000 10.750
14	14.0	0.156 13.688	0.188 13.624	0.250 13.500	0.312 13.376	0.375 13.250	0.375 13.250	0.438 13.124	0.594 12.812	0.500 13.000	0.750 12.500	0.938 12.124	1.094 11.812	1.250 11.500	1.406 11.188	
16	16.0	0.165 15.670	0.188 15.624	0.250 15.500	0.312 15.376	0.375 15.250	0.375 15.250	0.500 15.000	0.656 14.688	0.500 15.000	0.844 14.312	1.031 13.938	1.219 13.562	1.438 13.124	1.594 12.812	
18	18.0	0.165 17.670	0.188 17.624	0.250 17.500	0.312 17.376	0.438 17.124	0.375 17.250	0.562 16.876	0.750 16.500	0.500 17.000	0.938 16.124	1.156 15.688	1.375 15.250	1.562 14.876	1.781 14.438	
20	20.0	0.188 19.624	0.218 19.564	0.250 19.500	0.375 19.250	0.500 19.000	0.375 19.250	0.594 18.812	0.812 18.376	0.500 19.000	1.031 17.938	1.281 17.438	1.500 17.000	1.750 16.500	1.969 16.062	
22	22.0	0.188 21.624	0.218 21.564	0.250 21.500	0.375 21.250	0.500 21.000	0.375 21.250		0.875 20.250	0.500 21.000	1.125 19.750	1.375 19.250	1.625 18.750	1.875 18.250	2.125 17.750	
24	24.0	0.218 23.564	0.250 23.500	0.250 23.500	0.375 23.250	0.562 22.876	0.375 23.250	0.688 22.624	0.969 22.062	0.500 23.000	1.219 21.562	1.531 20.938	1.812 20.376	2.062 19.876	2.344 19.312	
34	34.0			0.312 33.376	0.500 33.000	0.625 32.750	0.375 33.250	0.688 32.624		0.500 33.000						
36	36.0			0.312 35.376	0.500 35.000	0.625 34.750	0.375 35.250	0.750 34.500		0.500 35.000						
42	42.0						0.375 41.250			0.500 41.000						
48	48.0						0.375 47.250			0.500 47.000						

1. For reference only.
2. Values are in accordance with ASME B36.10M, unless specified otherwise.
3. Sch.10s Values are in accordance with ASME B36.19M.
4. Nominal (Average) Wall and the corresponding inner diameter are listed.

Pipe Nominal (Average) Wall Thickness

NPS	OD	PIPE SCHEDULE														
		5	10s	10	20	30	STD	40	60	XS	80	100	120	140	160	XXS
1/8	0.405		0.049	0.049		0.057	0.068	0.068		0.095	0.095					
1/4	0.540		0.065	0.065		0.073	0.088	0.088		0.119	0.119					
3/8	0.675		0.065	0.065		0.073	0.091	0.091		0.126	0.126					
1/2	0.840	0.065	0.083	0.083		0.095	0.109	0.109		0.147	0.147				0.188	0.294
3/4	1.050	0.065	0.083	0.083		0.095	0.113	0.113		0.154	0.154				0.219	0.308
1	1.315	0.065	0.109	0.109		0.114	0.133	0.133		0.179	0.179				0.250	0.358
1-1/4	1.660	0.065	0.109	0.109		0.117	0.140	0.140		0.191	0.191				0.250	0.382
1-1/2	1.900	0.065	0.109	0.109		0.125	0.145	0.145		0.200	0.200				0.281	0.400
2	2.375	0.065	0.109	0.109		0.125	0.154	0.154		0.218	0.218				0.344	0.436
2-1/2	2.875	0.083	0.120	0.120		0.188	0.203	0.203		0.276	0.276				0.375	0.552
3	3.500	0.083	0.120	0.120		0.188	0.216	0.216		0.300	0.300				0.438	0.600
3-1/2	4.000	0.083	0.120	0.120		0.188	0.226	0.226		0.318	0.318					
4	4.500	0.083	0.120	0.120		0.188	0.237	0.237		0.337	0.337		0.438		0.531	0.674
5	5.563	0.109	0.134	0.134			0.258	0.258		0.375	0.375		0.500		0.625	0.750
6	6.625	0.109	0.134	0.134			0.280	0.280		0.432	0.432		0.562		0.719	0.864
8	8.625	0.109	0.148	0.148	0.250	0.277	0.322	0.322	0.406	0.500	0.500	0.594	0.719	0.812	0.906	0.875
10	10.75	0.134	0.165	0.165	0.250	0.307	0.365	0.365	0.500	0.500	0.594	0.719	0.844	1.000	1.125	1.000
12	12.75	0.156	0.180	0.180	0.250	0.330	0.375	0.406	0.562	0.500	0.688	0.844	1.000	1.125	1.312	1.000
14	14.0	0.156	0.188	0.250	0.312	0.375	0.375	0.438	0.594	0.500	0.750	0.938	1.094	1.250	1.406	
16	16.0	0.165	0.188	0.250	0.312	0.375	0.375	0.500	0.656	0.500	0.844	1.031	1.219	1.438	1.594	
18	18.0	0.165	0.188	0.250	0.312	0.438	0.375	0.562	0.750	0.500	0.938	1.156	1.375	1.562	1.781	
20	20.0	0.188	0.218	0.250	0.375	0.500	0.375	0.594	0.812	0.500	1.031	1.281	1.500	1.750	1.969	
22	22.0	0.188	0.218	0.250	0.375	0.500	0.375		0.875	0.500	1.125	1.375	1.625	1.875	2.125	
24	24.0	0.218	0.250	0.250	0.375	0.562	0.375	0.688	0.969	0.500	1.219	1.531	1.812	2.062	2.344	
34	34.0			0.312	0.500	0.625	0.375	0.688		0.500						
36	36.0			0.312	0.500	0.625	0.375	0.750		0.500						
42	42.0						0.375			0.500						
48	48.0						0.375			0.500						

Pipe Inner Diameter

NPS	OD	PIPE SCHEDULE														
		5	10s	10	20	30	STD	40	60	XS	80	100	120	140	160	XXS
1/8	0.405		0.307	0.307		0.291	0.269	0.269		0.215	0.215					
1/4	0.540		0.410	0.410		0.394	0.364	0.364		0.302	0.302					
3/8	0.675		0.545	0.545		0.529	0.493	0.493		0.423	0.423					
1/2	0.840	0.710	0.674	0.674		0.650	0.622	0.622		0.546	0.546				0.464	0.252
3/4	1.050	0.920	0.884	0.884		0.860	0.824	0.824		0.742	0.742				0.612	0.434
1	1.315	1.185	1.097	1.097		1.087	1.049	1.049		0.957	0.957				0.815	0.599
1-1/4	1.660	1.530	1.442	1.442		1.426	1.380	1.380		1.278	1.278				1.160	0.896
1-1/2	1.900	1.770	1.682	1.682		1.650	1.610	1.610		1.500	1.500				1.338	1.100
2	2.375	2.245	2.157	2.157		2.125	2.067	2.067		1.939	1.939				1.687	1.503
2-1/2	2.875	2.709	2.635	2.635		2.499	2.469	2.469		2.323	2.323				2.125	1.771
3	3.500	3.334	3.260	3.260		3.124	3.068	3.068		2.900	2.900				2.624	2.300
3-1/2	4.000	3.834	3.760	3.760		3.624	3.548	3.548		3.364	3.364					
4	4.500	4.334	4.260	4.260		4.124	4.026	4.026		3.826	3.826		3.624		3.438	3.152
5	5.563	5.345	5.295	5.295			5.047	5.047		4.813	4.813		4.563		4.313	4.063
6	6.625	6.407	6.357	6.357			6.065	6.065		5.761	5.761		5.501		5.187	4.897
8	8.625	8.407	8.329	8.329	8.125	8.071	7.981	7.981	7.813	7.625	7.625	7.437	7.187	7.001	6.813	6.875
10	10.75	10.482	10.420	10.420	10.250	10.136	10.020	10.020	9.750	9.750	9.562	9.312	9.062	8.750	8.500	8.750
12	12.75	12.438	12.390	12.390	12.250	12.090	12.000	11.938	11.626	11.750	11.374	11.062	10.750	10.500	10.126	10.750
14	14.0	13.688	13.624	13.500	13.376	13.250	13.250	13.124	12.812	13.000	12.500	12.124	11.812	11.500	11.188	
16	16.0	15.670	15.624	15.500	15.376	15.250	15.250	15.000	14.688	15.000	14.312	13.938	13.562	13.124	12.812	
18	18.0	17.670	17.624	17.500	17.376	17.124	17.250	16.876	16.500	17.000	16.124	15.688	15.250	14.876	14.438	
20	20.0	19.624	19.564	19.500	19.250	19.000	19.250	18.812	18.376	19.000	17.938	17.438	17.000	16.500	16.062	
22	22.0	21.624	21.564	21.500	21.250	21.000	21.250		20.250	21.000	19.750	19.250	18.750	18.250	17.750	
24	24.0	23.564	23.500	23.500	23.250	22.876	23.250	22.624	22.062	23.000	21.562	20.938	20.376	19.876	19.312	
34	34.0			33.376	33.000	32.750	33.250	32.624		33.000						
36	36.0			35.376	35.000	34.750	35.250	34.500		35.000						
42	42.0						41.250			41.000						
48	48.0						47.250			47.000						

1. For reference only.
2. Values are in accordance with ASME B36.10M, unless specified otherwise.
3. Sch.10s Values are in accordance with ASME B36.19M.

MATERIAL SPECIFICATIONS SHEET

IDENTIFICATION SYMBOL	UNS#	BAR	FORGINGS	WELD FITTINGS	PIPE	PLATE	ASME WELD CLASSIFICATION
Austenitic Stainless							
304	S30400	A276/479	A182	A403WP	A312	A240	P8
304H	S30409	A276/479	A182	A403WP	A312	A240	P8
304L	S30403	A276/479	A182	A403WP	A312	A240	P8
316	S31600	A276/479	A182	A403WP	A312	A240	P8
316H	S31609	A276/479	A182	A403WP	A312	A240	P8
316L	S31603	A276/479	A182	A403WP	A312	A240	P8
317L	S31703	A279/479	A182	A403WP	A312	A240	P8
321	S32100	A276/479	A182	A403WP	A312	A240	P8
321H	S32109	A276/479	A182	A403WP	A312	A240	P8
347	S34700	A276/479	A182	A403WP	A312	A240	P8
347H	S34709	A276/479	A182	A403WP	A312	A240	P8
F44 (254SMO)	S31254	A276/479	A182	A403WP	A312	A240	P8
Ferritic-Austenitic Stainless							
F51 (DUPLEX)	S31803	A276/479	A182	A182/A815WP	A790	A240	P10H
F53 (SUPER DUPLEX)	S32750	A479	A182	A182/A815WP	A790	A240	P10H
F55 (ZERON 100)	S32760	A276	A182	A182/A815WP	A790	A240	S-10H
F60	S32205	A276	A182	A182/A815WP	A790	A240	
Low Alloy Steels							
F5	K41545	A182	A182	A234	A335	A387	P5B
F9	K90941	A182	A182	A234	A335	A387	P5B
F91	K90901	A182	A182	A234	A335	A387	P5B
F11 Class 1	K11597	A182	A182	A234	A335	A387	P4
F11 Class 2 & 3	K11572	A182	A182	A234	A335	A387	P4
F22 Class 1 & 3	K21590	A182	A182	A234	A335	A387	P5A
Carbon-Steel		A105/A695	A105	A234	A106	A516	P1
Low-Temperature Steel		A350-LF2 CL1	A350-LF2 CL1	A420WPL6	A333GR6		P1
High Strength Transmission Service			A694F42 - F70	A860 / SP-75	A381 / API-5L		S-1
Nickel-Alloys							
Nickel-200	N02200	B160	B564	B366 WPN	B161	B162	P41
Alloy-400	N04400	B164	B564	B366 WPNC	B165	B127	P42
Alloy-600	N06600	B166	B564	B366 WPNC1	B167/B516	B168	P43
Alloy-625	N06625	B466	B564	B366 WPNCMC	B444	B443	P43
Alloy-800H	N08810	B408	B564	B366 WPNICIO	B407	B409	P45
Alloy-800HT	N08811	B408	B564	B366 WPNICII	B407	B409	P45
Alloy-825	N08825	B425	B564	B366 WPNICMC	B423	B424	P45
Corrosive High-Temp. Service							
A20	N08020	B473	B462	B366 WP20CB	B729	B463	P45
6 Moly-AL6XN	N08367	B691	B462	B366 WP6XN	B690	B688/A240	P45
C276	N10276	B574	B564/B462	B366 WPHC276	B619/B622	B575	P44
HAST-B2	N10665	B335	B564/B462	B366 WPHB-2	B619/B622	B333	P44
C-22	N06022	B574	B564/B462	B366 WPHC22	B619/B622	B575	P44
Titanium							
Grade 2	R50400	B348	B381 F2	B363 WPT2	B338	B265	P51
Grade 7	R52400	B348	B381 F7	B363 WPT7	B338	B265	P51
Copper - Nickel							
70-30 (MIL-STD)	C71500	Reference MIL-C & MIL-F Standards					P34
90-10 (MIL-STD)	C70600						P34
Cr-Mo Alloy Steel							
4130	G41300	A29 / A322	A711	A322	A519	A829	

CODES & STANDARDS

Codes & Standards

American Society of Mechanical Engineers (ASME)
B1.20.1 - Pipe Threads, General Purpose (Inch)
B16.5 - Pipe Flanges & Flanged Fittings
B16.9 - Factory - Made Wrought Butt-Welding Fittings
B16.11 - Forged Fittings, Socket-Welding & Threaded
B16.25 - Butt-Welding Ends
B16.47 - Large Diameter Steel, Flanges (NPS 26 Thru NPS 60)
B31.1 - Power Piping
B31.3 - Process Piping
B31.4 - Pipeline Transportation Systems for Liquid Hydrocarbons and slurries
B31.8 - Gas Transmission & Distribution Piping Systems
B31.9 - Building Services Piping
B36.19M - Stainless Steel Pipe

Pipe Fabrication Institute - Engineering & Fabrication Standards (PFI)
ES-1 - Internal Machining Backing Rings
ES-16 - Access Holes, Bosses, Plugs, for RT. Inspection of Pipe Welds
ES-36 - Branch Reinforcement
ES-42 - PMI STD.

NACE International
MRO175 Material Requirements
(For Resistance To Sulfide Stress Cracking. BHN / HRC)
MRO103 Oil and Gas Production Refinery Equipment

American Society of Testing and Materials (ASTM)
A262-Intergranular Test, Austenitic Stainless
A275-Magnetic Particle Exam.
A370-Mechanical (Tensile) Test Steel Products
A388-Ultrasonic Exam: Steel Forgings
A751-Chemical Analysis of Steel Products
E-10-Test Brinell. Hardness
E23-Standard Notch Bar Impact Test
E112-Test-Grain Size
E165-Liquid Penetrant Exam.
E562-Test Method Determining Volume Fraction By Manual Point Count

Manufacturers Standardization Society (MSS)
SP-25 - Marking Valves, Fittings, Flanges, & Unions
SP-42 - Stainless Butt-Weld Fittings
SP-44 - Steel Pipeline Flanges 12"- 60" F36 - F70
SP-75 - High-Test Butt-Weld Fittings
SP-79 - Socket-Welding Reducer Inserts
SP-83 - Class 3000 Steel Pipe Unions
SP-95 - Swages & Bull Plugs
SP-97 - Branch Outlet Fittings, Socket Welding, Threaded, Buttwelding

Certifications & Registrations

Global Certifications
ISO 9001 (Certified by HSB Registration Services)
PED (Certified by Hartford Steam Boiler International GmbH)

US Standards & Memberships
ASME (American Society of Mechanical Engineers)
HUB (Certified by State of Texas)
MSS (Manufacturers Standardization Society)
PFI (Pipe Fabrication Institute)
WBENC (Certified by the WBENC & WBNA)

Canadian Registration Numbers (CRNs)

CATEGORY "A" PIPE FITTINGS	
ALBERTA	0A00952.92
BRITISH COLUMBIA	EXEMPT
MANITOBA	0A0952.94
NEW BRUNSWICK	0A0952.97 REV4
NEW FOUNDLAND & LABRADOR	0A0952.90 REV4
NORTHWEST TERRITORIES	0A0952.9T REV4
NOVA SCOTIA	0A0952.98 REV4
NUNAVUT	0A0952.9N REV4
ONTARIO	0A0952.95R2
PRINCE EDWARD ISLAND	0A0952.9 REV4
QUEBEC	CSA-0A0952.96R2
SASKATCHEWAN	CSA-0A0952.96R2
YUKON	0A0952.9YREV4

CATEGORY "B" FLANGES	
ALBERTA	0B00997.92
BRITISH COLUMBIA	EXEMPT
MANITOBA	0B0997.94
NEW BRUNSWICK	0B0997.97 REV1
NEW FOUNDLAND & LABRADOR	0B0997.90 REV1
NORTHWEST TERRITORIES	0B0997.9T REV1
NOVA SCOTIA	0B0997.98 REV1
NUNAVUT	0B0997.9N REV1
ONTARIO	0B0997.95R1
PRINCE EDWARD ISLAND	0B0997.9 REV1
QUEBEC	CSA-0B0997.96R1
SASKATCHEWAN	CSA-0B0997.96R1
YUKON	0B0997.9YREV1

MEMBERSHIPS / CERTIFICATES

Since MSS 1924

MANUFACTURERS STANDARDIZATION SOCIETY
OF THE
VALVE AND FITTING INDUSTRY, INC.

HEREBY CERTIFIES THAT

Welding Outlets, Inc.

IS A MEMBER IN GOOD STANDING FOR THE YEAR [redacted]

G.M. Johnson
President

Robert O'Neill
Executive Director

WBENC Women's Business Enterprise National Council

hereby grants

National Women's Business Enterprise Certification

to

WELDING OUTLETS INC (WOI)

who has successfully met WBENC's standards as a Women's Business Enterprise (WBE).
This certification affirms the business is woman-owned, operated and controlled; and is valid through the date herein.

WBENC National WBE Certification was processed and validated by Women's Business Enterprise Alliance, a WBENC Regional Partner Organization.

Expiration Date: [redacted]
WBENC National Certificate Number: 231514

Authorized by April Day, President,
Women's Business Enterprise Alliance

WBEA

NAICS Codes: 332710, 332996

UNSPSC Codes: 73000000

HSB REGISTRATION SERVICES
595 E. SWEDESFORD ROAD
WAYNE, PENNSYLVANIA 19087

Certificate of Registration

This is to certify that:
Welding Outlets, Inc.
1341 Hill Road
Houston, TX 77039

Has established and applied an Quality Management System for:
Design, Manufacture and Sale of Piping and Pressure Vessel Components

Proof has been furnished that the requirements according to
ISO 9001:2008
are fulfilled.

EA Code: 17

Certificate Number: HQ-Q-941

Initial Audit Date: [redacted]
Effective Date: [redacted]
Expiration Date: [redacted]
Revision Date:

Signed on behalf of HSB Registration Services

Certificate Number: HQ-Q-941

Page 1 of 1

HSB Global Standards

QP10.3-F.064	HSB UK Quality Management System Certificate	HSB Global Standards	
Revision: 1			
Date: [redacted]		Page:	1 of 1

Pressure Equipment Directive

Quality Assurance System of Material Manufacturers in acc. with Annex I No 4.3 of the PED 97/23/EC

The company

Welding Outlets, Inc.
1341 Hill Road
Houston
Texas 77039
USA

Successfully Implemented a Quality Assurance System to meet the requirements of Section 4.3 of Annex I of the Pressure Equipment Directive 97/23/EC

This certificate applies to Manufacture of Non-welded Carbon, Low Alloy or Stainless Steel and Nonferruos Fittings, Special Forgings and Flanges. Size Range from NPS 3/8 to NPS 60

The Notified Body:
Hartford Steam Boiler UK Limited
Crosby Court
28 George Street
Birmingham, B3 1QG, England
Notified Body: 2561

Certificate No: HSB UK-13-06-038
HSB UK Reg.-No: US.WEL.872.00-MM

First Certification (HSBI): [redacted]
Certification Date: [redacted]
Expiration Date: [redacted]

Christoph Tieke	20. Nov. 2014	
Product Certifier	Date	Signature & Stamp

HSB UK

CURRENT CERTIFICATES AVAILABLE ON WOI WEBSITE.