INSTALLATION INSTRUCTIONS

Item#73332-66A (New. 2023/02/16)

READ AND SAVE THESE INSTRUCTIONS

WARNING! SHUT POWER OFF AT FUSE OR CIRCUIT BREAKER.

AVERTISSEMENT! COUPER LE COURANT AU NIVEAU DES FUSIBLES OU DU DISJONCTEUR.

MOUNTING THE FIXTURE (Fig.1)

1. Shut off the power at the circuit breaker and remove the old fixture, including the mounting hardware.
2. Carefully unpack your new fixture and lay out all the parts on a clear area. Take care not to lose any small parts necessary for installation.
3. Pull up latch (H) and open the door. Install the glass Panels (K) (1pc, Size: L750mm x W212mm), (J) (2pcs, Size: L750mm x W158mm), (L) (1pc, Size: L727mm x W189mm) onto fixture body (C) and secure with tabs inside frame.
4. Position mounting plate (A) on the wall and mark location of the four mounting holes. Pre-drill the holes for dry wall anchors (N). Insert drywall anchors (N) into wall.
5. Attach mounting plate (A) to junction box using mounting screws (B) (Size: #8-32N*L0.5”). The side of mounting plate marked “GND” must face out.
6. Secure mounting plate (A) by inserting wood screws (M) through holes on mounting plate into the plastic anchors (N).
7. The support cable is provided to support weight of fixture while wiring. Align fixture to mounting plate (A) and attach hook (P) on the end of support cable (O) into a slot located on mounting plate (A). Carefully allow the support cable (O) to support weight of the fixture while wiring.

CONNECTING THE WIRES (Fig. 2)

8. Connect the electrical wires as shown in (Fig. 2). Making sure that all wire connectors are secured. If your outlet box has a ground wire (green or bare copper), connect fixture’s ground wire to it. Otherwise, connect fixture’s ground wire directly to mounting plate using green screw provided.
9. Tuck wire connectors neatly into the junction box.

COMPLETING THE INSTALLATION

10. Align fixture body (C) onto mounting plate (A) and secure with plastic washer (E) and screws (D).
11. To prevent moisture from entering the outlet box and causing a short, use clear caulking (i.e. Indoor/Outdoor Silicone Sealant) to outline outside of fixture back-plate where it meets the wall leaving a space at bottom to allow moisture a means to escape (Fig.3).
12. To prevent moisture from entering the outlet box and causing a short, use clear caulking (i.e. Indoor/Outdoor Silicone Sealant) to outline outside of fixture back-plate where it meets the wall leaving a space at bottom to allow moisture a means to escape (Fig.3).
13. Place candle covers (F) over sockets (I).
14. Install (4) four candelabra base bulbs (G) up to 60 watts or CFL or LED equivalent (not included) in accordance with the fixture specification. **(DO NOT EXCEED THE SPECIFIED WATTAGE!) (NE PAS DEPASSER LA PUISSANCE NOMINALE MAXIMALE!).**
15. Close the door and re-latch (H) onto door.

Your installation is now complete. Return power and test the fixture.

Note: Illustration (Fig. 1) on this manual is for installation purposes only. It may or may not be identical to the fixture purchased.

Fig. 1

Set#A-021-170225
-Mounting Plate
-Ground Screw
-Mounting Screw *2

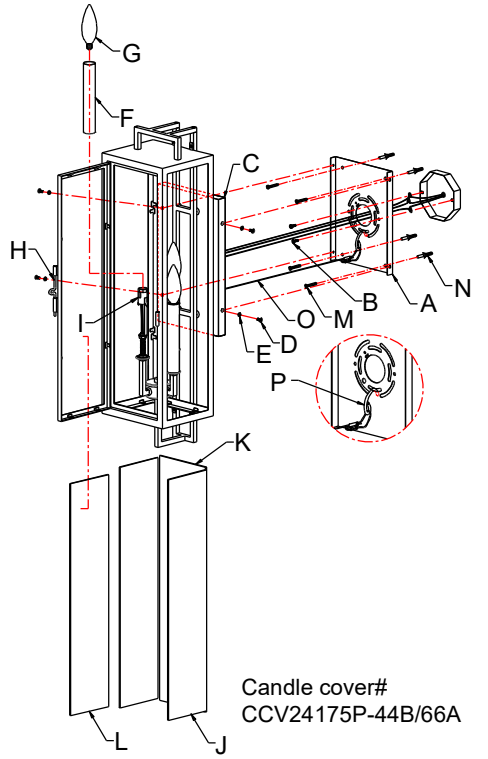

Candle cover#
CCV24175P-44B/66A

Fig. 2

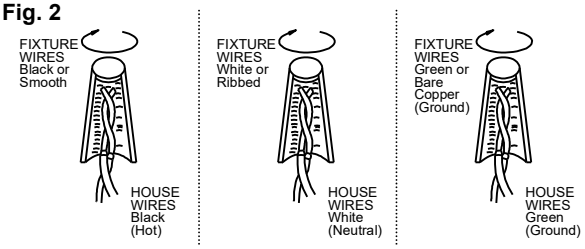

Fig. 3

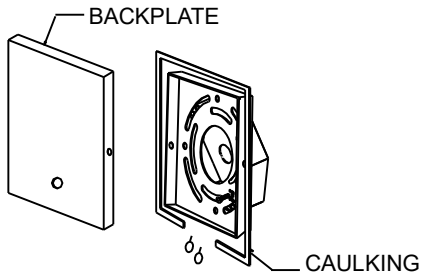

Intertek

american lighting association

LA-3637E