PFWSC1197 TWO HANDLE BAR FAUCET

Product Features

- Max. flow rate: 1.2 gpm (4.54 L/min) at 60 psi
- Metal handle
- Ceramic disc cartridge
- 360-degree swing spout
- Requires sink with holes 4" on-center



PFWSC1197CP

Optional Parts

0.5 GPM Aerator	OBPF530223CP
1.0 GPM Aerator	Neoperl 40.2058.000
Thick Deck Extension Kit	OBPF23644EXT

Codes and Certifications

- Certified to ASME A112.18.1 / CSA B125.1
- cUPC/IAPMO listed
- Handle ADA compliant
- NSF/ANSI/CAN 61: Q ≤1

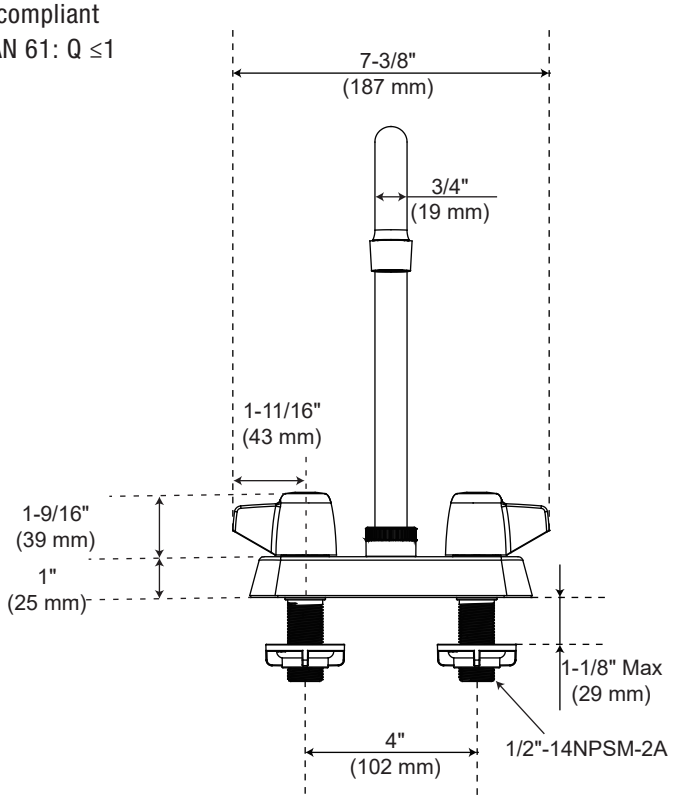

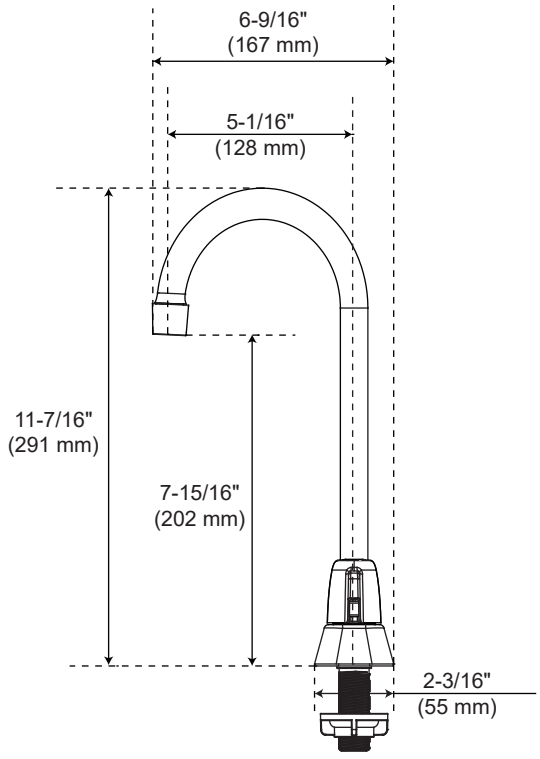

For detailed warranty information, visit **ferguson.com/proflo-faucet-warranty**.

©2024 Ferguson Enterprises, LLC. FG 12/2024-A