TEAR SHEET



Hulton Sconce

Item # TOB 2190PN-L

Designer: Thomas O'Brien

Height: 17"
Width: 6"
Extension: 7.5"
Backplate: 4" x 7.25" Rectangle
Finishes: BZ, HAB, PN
Shade Treatments: WG, L
Shade Details: 4" x 6" x 6.5"
Socket: E12 Candelabra
Wattage: 60 B11
Weight: 5 Pounds
Note: Requires Smaller Outlet Box

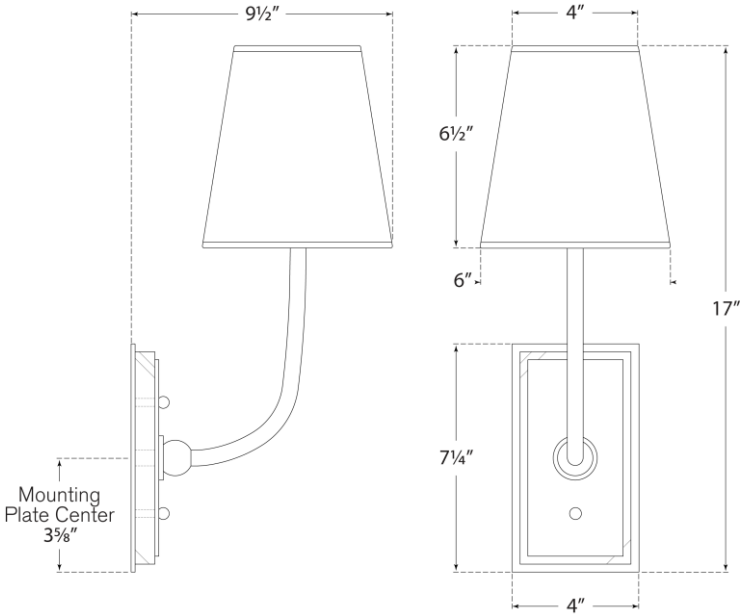

VISUAL COMFORT & CO.