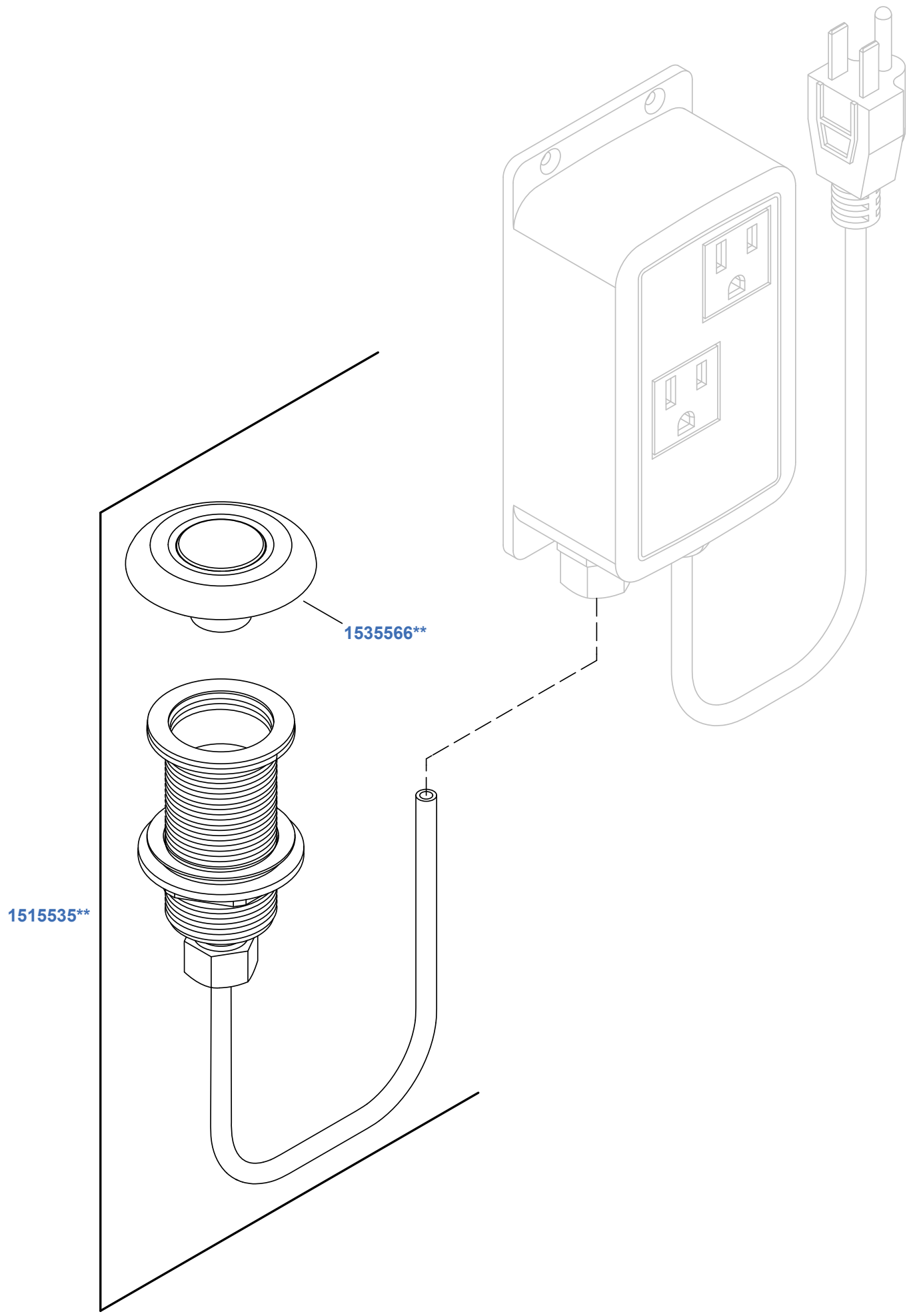

1550213-8-**A**

©2023 Kohler Co.

Exit Full Screen