Veil® | K-31539

Wall-hung compact elongated toilet, dual-flush

Features

- One-piece wall-hung toilet
- Compact elongated bowl offers added comfort while occupying the same space as a round-front bowl
- 2-1/8" (54 mm) fully glazed trapway
- Fully skirted trapway simplifies cleaning
- Quiet-Close™ elongated lid and seat prevents slamming
- Coordinates with other products in the Veil collection
- Bowl and seat only; requires KOHLER® in-wall tank and carrier system with dual-flush actuator (sold separately)



Sustainability

Available Colors/Finishes

Color tiles intended for reference only.

	0	White
	7	Black Black

1-800-4KOHLER (1-800-456-4537)
Kohler Co. reserves the right to make revisions without notice to product specifications.
For the most current specification sheet, go to www.kohler.com USA or www.kohler.ca Canada.
4-15-2026 6:21 - US-CA

THE BOLD LOOK OF KOHLER®

Codes/Standards

Accessibility standards may require controls to be located on the open side of the toilet.
Plumbing codes may require elongated toilets and elongated, open-front seats in public bathrooms.

ASME A112.19.2/CSA B45.1
ASME A112.19.14
DOE - Energy Policy Act 1992
EPA WaterSense®
California Energy Commission (CEC)

Technical Information

Rough-in:	8.8"
Flush Type:	Washdown
Flush Rate:	1.0 or 1.6 gpf (3.8 or 6.0 lpf)
Bowl Shape:	Elongated
Seat-Mounting Holes:	5-1/2" (140 mm)
Waste Outlet:	Wall
Trapway Size:	3" (76 mm)
Trapway Type:	Skirted
Water Surface Size:	4-1/16" x 5-3/16" (103 mm x 132 mm)
Rim to Water Surface:	8-1/4" (210 mm)

Pressure/Fixture Supply Requirements

Minimum Flowing Pressure:	15 psi (103.4 kPa)
Minimum Flow Rate:	1 gpm (3.8 l/min)

Recommended Products/Accessories

K-23726 Drain treatment

Required Products/Accessories

- K-6284 2" x 6" in-wall tank and carrier system

or

- K-28829 In-wall tank and carrier system

or

- K-28830 In-wall tank and carrier system

Warranty

See website for detailed warranty information.

KOHLER® Toilets and Seats Limited Warranty

1-800-4KOHLER (1-800-456-4537)
Kohler Co. reserves the right to make revisions without notice to product specifications.
For the most current specification sheet, go to www.kohler.com USA or www.kohler.ca Canada.
4-15-2026 6:21 - US-CA

THE BOLD LOOK OF KOHLER.

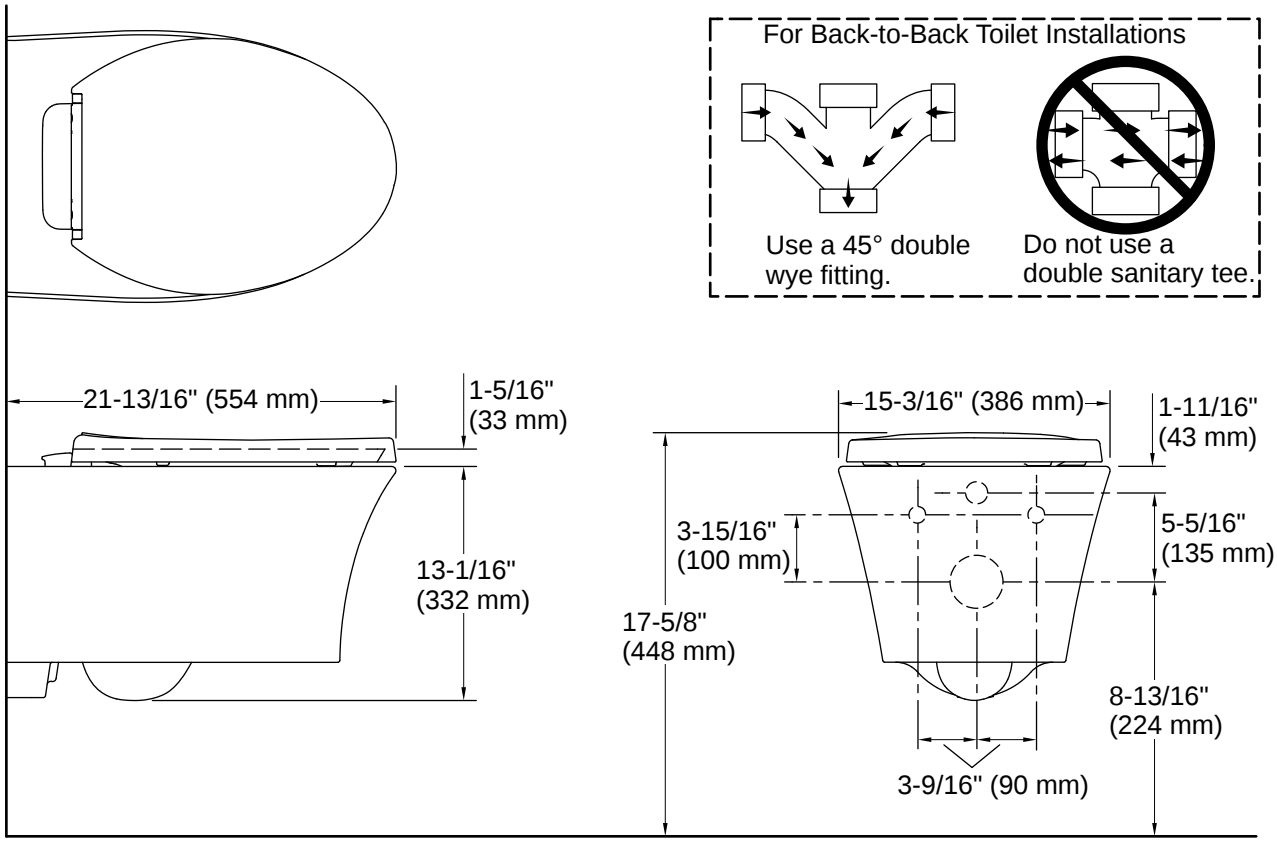

Installation

- Bowl can be mounted anywhere between 15-3/8" – 28-1/2" (391 – 724 mm) from floor to bowl rim, depending on in-wall tank used

Installation Notes

Install this product according to the installation instructions.

Product dimensions are nominal and may vary per ASME A112.19.2 tolerances.

1-800-4KOHLER (1-800-456-4537)
Kohler Co. reserves the right to make revisions without notice to product specifications.
For the most current specification sheet, go to www.kohler.com USA or www.kohler.ca Canada.
4-15-2026 6:21 - US-CA

THE BOLD LOOK OF KOHLER.