NIRON CLIMA BUTT FUSION FITTING
STUB FLANGE SHORT SPIGOT SDR 11



ITEM: 27NCRT_11S

SIZE RANGE: 14” (355 mm) ÷ 20” (500 mm)

SDR: 11

FUSION RANGE: For Butt Fusion – SDR11

MATERIAL: PP-RCT (Borealis RA 7050 beta crystalline random copolymer PP)

COLOR: Steel Grey

INSTALLATION INSTRUCTIONS:
Butt fusion - Butt fitting in accordance with DVS 2207, ASTM D2657 and NUPI Niron Installation Manual

LISTINGS:
NSF PW; ANSI/NSF 14; ANSI/NSF 61; ANSI/NSF 51; UPC; IPC; IAPMO; ICC-ES

STANDARDS:
ANSI/NSF 14; ANSI/NSF 61; ASTM F2389; ASTM F2023; CSA B137,11; ASTM E-84***; CAN/ULC S102***; NSF 51; ISO 15874

MAXIMUM OPERATING PRESSURE:

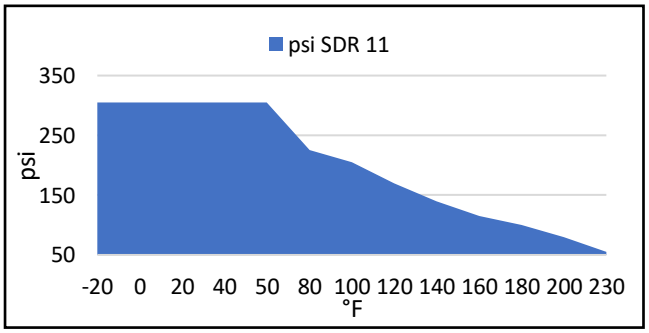

For code or standard question pertaining to NIRON CLIMA Pipe and Fittings, contact Nupi Americas.

PRODUCT INFORMATION AND APPLICATION USE:
Niron Butt Fusion Fittings is designed to be joined by means of heat element butt fusion or electrofusion in accordance with the above listed installation instructions. Fittings are manufactured with extended plain ends on each outlet which a reinforced area in the center of the fitting for strength. The dimensions of the fittings are in accordance with the requirements of ASTM F2389. The fittings are designed to match the wall thickness and pressure ratings of the matching Niron pipe of the same SDR. Fittings are unitary and injection molded and are solid grey in color.

Nupi Americas, Inc.
314 Commerce Parkway
Early Branch, SC 29916
Phone: 813-398-3579
Fax: 813-398-3639
Mail: info@nupiamericas.com
Website: www.nupiamericas.com

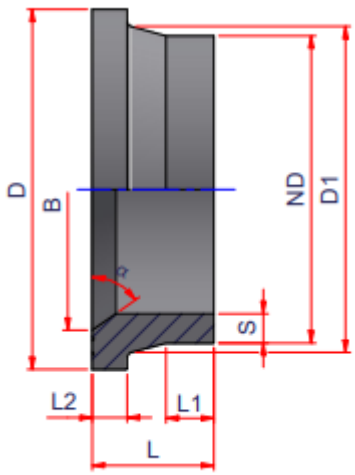

CODE	ANSI 150# HOLE PATTERN	Weight lbs/pc	Volume ft^3/pc	ND	S	D1	D	L1	L2	L	B	α
27NCRT35511S	14"	8.908	1.0028	14" => 355 mm	1.27	14.05	16.91	2.72	1.65	6.06	13.31	67.5°
27NCRT40011S	16"	12.587	1.264	16" => 400 mm	1.43	15.75	19.29	2.56	1.85	5.87	14.57	67.5°
27NCRT40011SV	16"	23.788	1.5557	16" => 400 mm	1.43	16.06	19.19	2.6	3.07	7.3	15.51	67.5°
27NCRT45011S	18"	17.266	2.0468	18" => 450 mm	1.61	18.11	21.46	3.54	2.32	7.68	17.56	60°
27NCRT50011S	20"	20.85	2.3572	20" => 500 mm	1.79	20.16	23.03	3.68	2.34	7.68	19	67.5°

MANUFACTURER' S WARRANTY:

Thirty (30) Years from the date of sale upon successful completion of pressure test of the piping system (refer to published warranty for complete details).

NOTE:
* More information can be found on NIRON TECHNICAL CATALOGUE
*** In order for Niron pipe and fittings to meet E-84 and/or CAN/ULC S102.2 for installation in a plenum application, it must be covered with a minimum of 1" or greater E-84 fiberglass insulation
**** Technical Data may undergo dimensional changes, check revision at the top

Nupi Americas, Inc.
314 Commerce Parkway
Early Branch, SC 29916
Phone: 813-398-3579
Fax: 813-398-3639
Mail: info@nupiamericas.com
Website: www.nupiamericas.com

***** It is the designer's/installer's responsibility to verify disc clearance before installation/purchasing the product by dry fitting the stub flange with the butterfy valve. Consult the Niron Installation Manual for further details concerning the installation of butterfly valves

Nupi Americas, Inc.
314 Commerce Parkway
Early Branch, SC 29916
Phone: 813-398-3579
Fax: 813-398-3639
Mail: info@nupiamericas.com
Website: www.nupiamericas.com