WRX — 1002

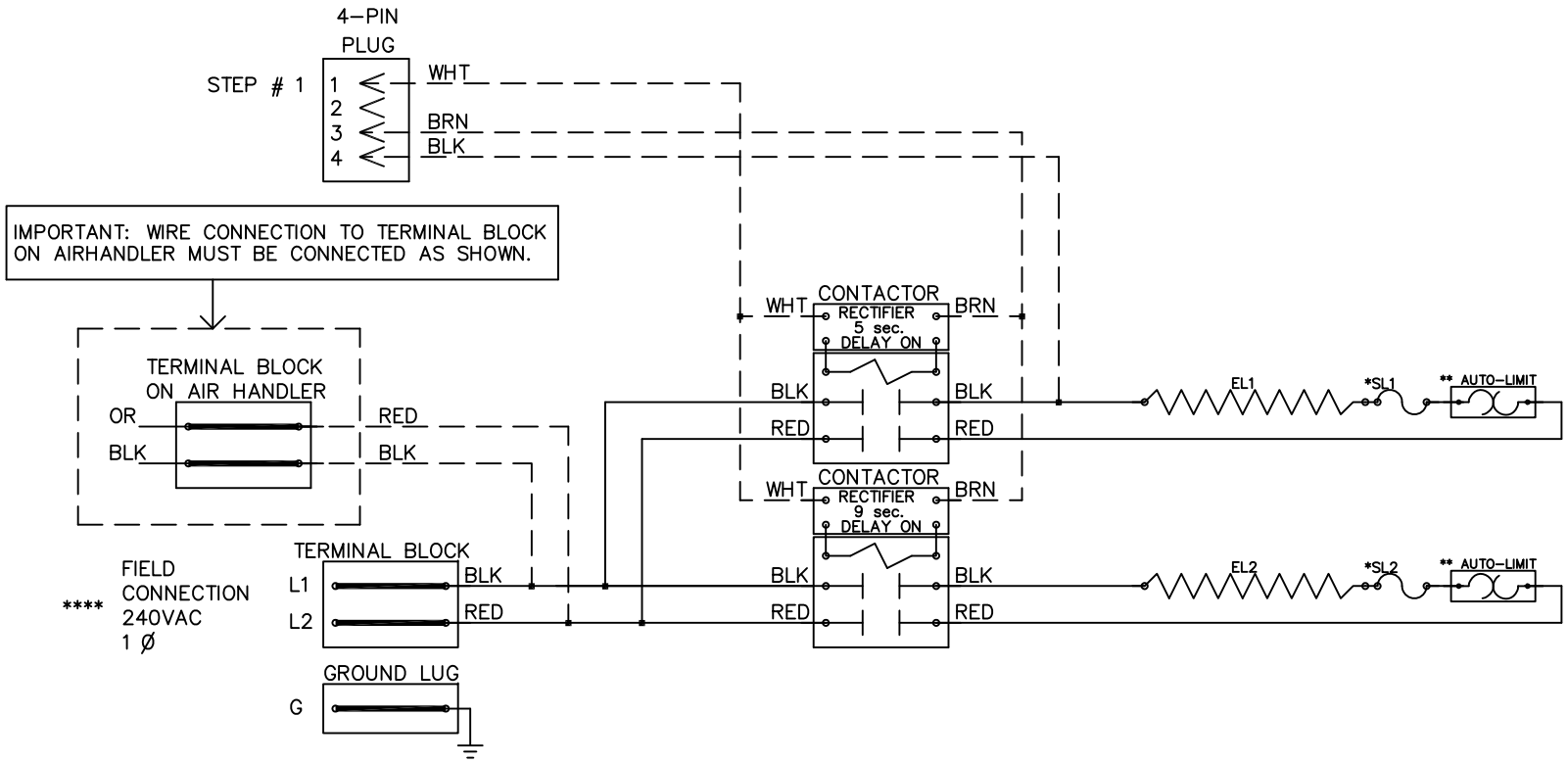

NOTE :

* Replace "Service Loop" with SL075B

** Replace Auto-Reset with Therm-O-Disc type 60TX11-L165.

*** Relays utilize 22-28VDC coils with AC to DC rectifiers. Do not use relay without rectifier. 24VAC, Class 2 power source must not exceed 26.4VAC under any primary input voltage condition per UL/NEC.

* Power supply wiring per NEC & Local Codes. Suitable for at least 75°C. Use copper conductor wiring only.

Model	WRX-1002
Serial #	
Tag -	
Kilowatts	9.60
Volts-Ph-Hz	240/1/60
Control Volts	24.0
Steps	1
Heater Amps	40.00

Control Wiring - - - - - - - - -
Power Wiring _____
Field Wiring _____

WRX1002

Rev. by : M. REEVES
Date: 02/27/15

WARREN TECHNOLOGY