PRODUCT SPECIFICATIONS

Just Mfg Stainless Steel 19" x 18" x 7-5/8" Single Bowl Drop-in Sink. Sink is manufactured from 18 gauge 304 Stainless Steel with a Lustrous Satin finish, Center drain placement, and Bottom only pads.

Installation Type:	Drop-in
Material:	304 Stainless Steel
Finish:	Lustrous Satin
Gauge:	18
Sound Deadening:	Bottom only pads
Number of Bowls:	1
Sink Dimensions:	19" x 18" x 7-5/8"
Bowl 1 Dimensions:	16" x 11-1/2" x 7-1/2"
Drain Size:	3-1/2" (89mm)
Drain Location:	Center
Minimum Cabinet Size:	24"
Mounting Hardware:	Included
Cutout Template #:	1000001260

Template is available for download at justmfg.com. CAD software will be required to open the template.

Cutout Dimensions for Drop-in Installation:
18-3/8" x 17-3/8" (467mm x 441mm) with 1-1/2" (38mm) corner radius

Hole Drilling Configurations:

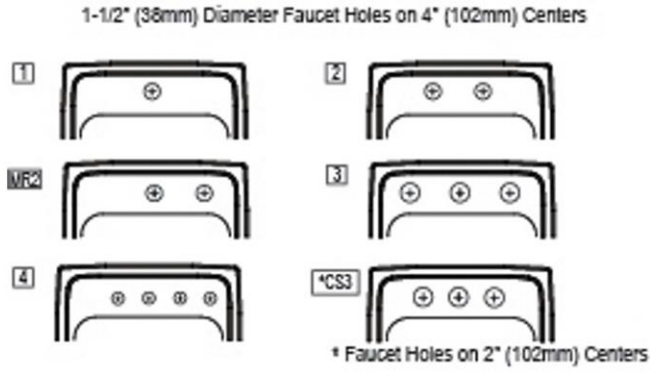

Quality Grade Plumbing Products.
Since 1933 we have become the industry standard for designing and producing quality grade plumbing products and fixtures. Our role as an industry leader remains unsurpassed.

Product Compliance: ASME A112.19.3/CSA B45.4

Clean and Care Manual (PDF)
Installation Instructions (PDF) - 2000000856
Warranty (PDF)

PART:_____QTY: _____
PROJECT:_____
CONTACT:_____
DATE:_____
NOTES:_____
APPROVAL:_____

In keeping with our policy of continuing product improvement, Just Mfg reserves the right to change product specifications without notice. Please visit justmfg.com for the most current version of Just Mfg product specification sheets. This specification describes a product with design, quality, and functional benefits to the user. When making a comparison of other producers' offerings, be certain these features are not overlooked.

Installation Profile:

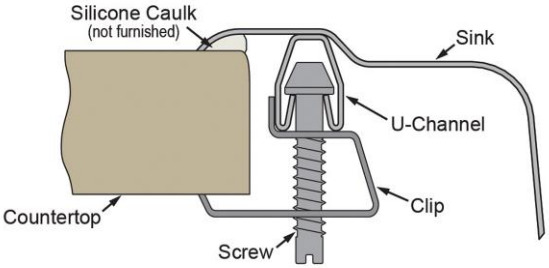

In keeping with our policy of continuing product improvement, Just Mfg reserves the right to change product specifications without notice. Please visit justmfg.com for the most current version of Just Mfg product specification sheets. This specification describes a product with design, quality, and functional benefits to the user. When making a comparison of other producers' offerings, be certain these features are not overlooked.