**40MCCAQ**
**One Way Cassette Ductless System**
**Sizes 6K - 18K**

Carrier
Turn to the experts

# Product Data

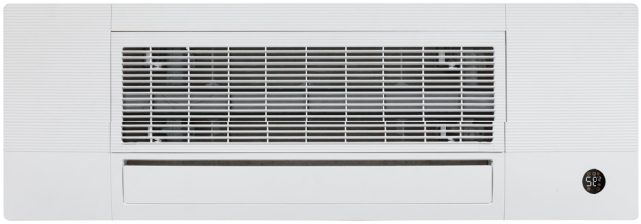

**Fig. 1 — Cassette**

**NOTE: Images are for illustration purposes only. Actual models may differ slightly.**

## TABLE OF CONTENTS


| | PAGE |
|---|---|
| INDUSTRY LEADING FEATURES / BENEFITS | 1 |
| MODEL NUMBER NOMENCLATURE | 3 |
| STANDARD FEATURES AND ACCESSORIES | 4 |
| SPECIFICATIONS | 5 |
| COMPATIBILITY TABLE | 5 |
| CLEARANCE | 6 |
| DIMENSIONS | 6 |
| APPLICATION DATA | 7 |
| WIRING | 8 |
| WIRELESS REMOTE CONTROL | 8 |
| AIR FLOW DATA | 9 |
| AIR THROW DATA | 9 |
| SOUND PRESSURE | 9 |
| SOUND PRESSURE TESTING METHOD | 9 |
| FAN AND MOTOR SPECIFICATIONS | 10 |
| CONNECTION DIAGRAM | 10 |
| WIRING DIAGRAM | 11 |
| GUIDE SPECIFICATIONS | 12 |


## INDUSTRY LEADING FEATURES / BENEFITS

### A PERFECT BALANCE BETWEEN BUDGET LIMITS, ENERGY SAVINGS AND COMFORT.

The **40MCCAQ** ductless series systems are a matched combination of an outdoor condensing unit and an indoor fan coil unit connected only by refrigerant tubing and wires.

The in-ceiling cassette fan coils are ideal for retrofit or modernization projects where a false ceiling is available. This selection of fan coils permits inexpensive and creative solutions to design problems such as:

- **Add-ons to current space (an office or family room addition)**
- **Special space requirements**
- **When changes in the load cannot be handled by the existing system**
- **When adding air conditioning to spaces that are heated by hydronic or electric heat and have no ductwork**
- **Historical renovations or any application where preserving the look of the original structure is essential.**

The ideal compliment to your ducted system when it is impractical or prohibitively expensive to use ductwork. These compact indoor fan coil units take up very little space in the room and do not obstruct windows. The fan coils are attractively styled to blend with most room decors. These systems are also designed to fit between 16" joists.

Advanced system components incorporate innovative technology to provide reliable cooling performance at low sound levels.

## PUSHIN INSTALLATION

The PushIn Case option is designed for easy installation. Installers can attach the unit case to the beams, plug in the one-way cassette, and connect conduits. This method of installation guarantees that the unit is placed in the desired position.

## HANGUP INSTALLATION

The HangUp Installation (hanging the unit with hooks) is a more common method. The hangers have an anti-cutting design that is easy to lift, which protects hands from being scratched by sharp edges.

## BUILD-IN DRAIN PUMP

The built-in water pump can discharge the condensate water.

No need to add an extra water pump to the side of the unit.

## EASY–TO-ACCESS CORE COMPONENTS

Adopting the design of the high wall split, installers only have to open the front panel to gain access to PCB box and water pump sections.LOW SOUND LEVELS

When noise is a concern, the ductless systems are the answer. The indoor units are whisper quiet. There are no compressors indoors, either in the conditioned space or directly over it, and there is none of the noise usually generated by air being forced through ductwork.

## SECURE OPERATION

If security is an issue, outdoor and indoor units are connected only by refrigerant piping and wiring to prevent intruders from crawling through ductwork. In addition, since the outdoor units can be installed close to an outside wall, coils are protected from vandals and severe weather.

## SIMPLE SERVICING AND MAINTENANCE

Removing the top panel on outdoor units provides immediate access to the control compartment, providing a service technician access to check unit operation. In addition, the draw−thru design of the outdoor section means that dirt accumulates on the outside surface of the coil. Coils can be cleaned quickly from the inside using a pressure hose and detergent.

On all indoor units, service and maintenance expense is reduced due to easy−to−use cleanable filters. In addition, these cassette systems have extensive self−diagnostics to assist in troubleshooting.

## BUILT-IN RELIABILITY

Ductless system indoor and outdoor units are designed to provide years of trouble-free operation. The in-ceiling cassette units include protection against freeze-up and high evaporator temperatures on heat pumps. The condensing units on heat pumps are protected by a three minute time delay before the compressor starts the over-current protection and the high temperature protection.

## INDIVIDUAL ROOM COMFORT

Maximum comfort is provided because each space can be controlled individually based on usage pattern. The air sweep feature provided permits optimal room air mixing to eliminate hot and cold spots for occupant comfort. In addition, year-round comfort can be provided with heat pumps.

## ECONOMICAL OPERATION

The ductless system design allows individual room heating or cooling when required. There is no need to run large supply-air fans or chilled water pumps to handle a few spaces with unique load patterns. In addition, because air is moved only in the space required, no energy is wasted moving air through ducts.

## EASY-TO-USE CONTROLS

The in-ceiling cassette has microprocessor-based controls to provide the ultimate in comfort and efficiency. The user friendly wireless remote control provides the interface between user and the unit.

## FACTORY INSTALLED CONDENSATE LIFT PUMP

Customizing these ductless systems to your application is easily accomplished. The factory installed condensate lift pump on the cassette fan coil unit provides installation flexibility.

## AGENCY LISTINGS

All systems are listed with AHRI (Air Conditioning, Heating & Refrigeration Institute), and UL/ETL under UL 60335-2-40.

**Manufacturer reserves the right to change, at any time, specifications and designs without notice and without obligations.**

# MODEL NUMBER NOMENCLATURE

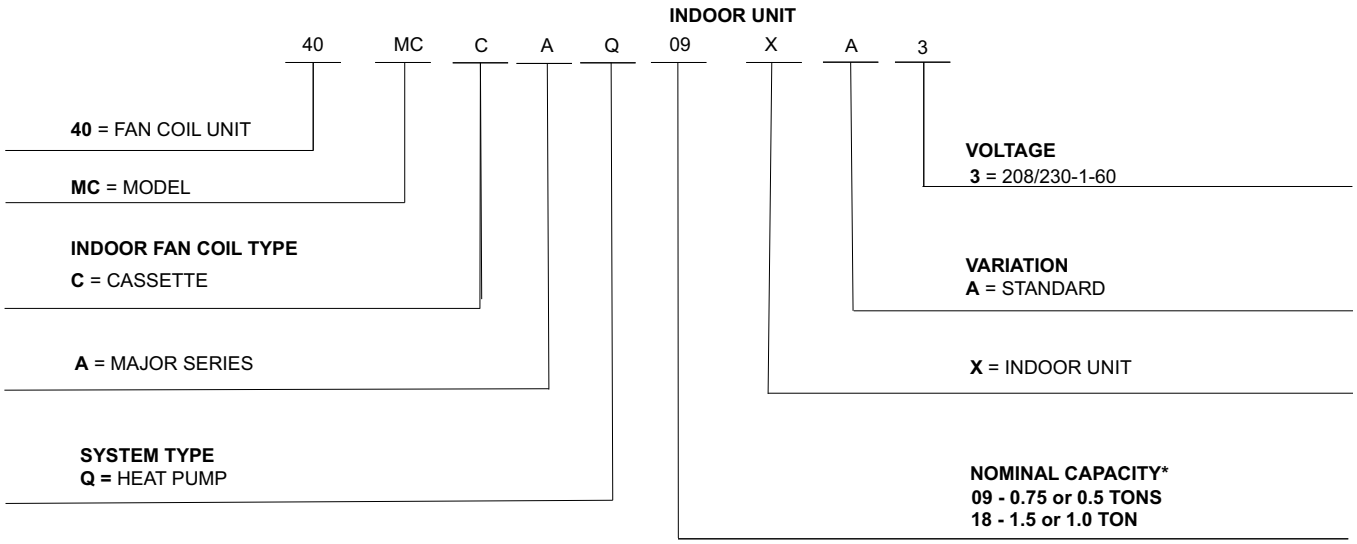


A221006 *** Models have dual-capacity capability**

AHRI CERTIFIED www.ahridirectory.org

Use of the AHRI Certified TM Mark indicates a manufacturer's participation in the program For verification of certification for individual products, go to www.ahridirectory.org.

INTERTEK ETL LISTED C US

A221007

# STANDARD FEATURES AND ACCESSORIES

## FEATURES

| | |
|---|---|
| **Ease Of Installation** | |
| Designed to be mounted between 16" joists | S |
| Dual Capacity Capability | S |
| Anti-Corrosive Pre-Coated Fins | S |
| **Comfort Features** | |
| Modes: Default (Factory Settings) Cool, Heat, Dry, Fan, Auto, Turbo | S |
| Four Fan Speeds | S |
| ECO Mode | S |
| Quiet Indoor Operation | S |
| Breeze Away | S |
| **Energy Saving Features** | |
| Sleep Function | S |
| Auto Restart | S |
| **Safety and Reliability** | |
| Three-Minute Protection Feature | S |
| Louver Angle Memory Function | S |

**Legend**
S - Standard

## ACCESSORIES

| Accessory No. | Description | For Models |
|---|---|---|
| KSACN0101AAA | Wireless Remote Control | All Sizes |
| KSACN0701AAA | Wired Remote Control 7-Day Programmable | All Sizes |
| KSAIF0601AAA | Wi-Fi Kit | All Sizes |

**Manufacturer reserves the right to change, at any time, specifications and designs without notice and without obligations.**

# SPECIFICATIONS

| SYSTEM | INDOOR SIZE | | 6/9K | 12K | 18K |
|---|---|---|---|---|---|
| Electrical | Voltage, Phase, Cycle | V/Ph/Hz | 208/230-1-60 | 208/230-1-60 | 208/230-1-60 |
| | Power Supply | | Indoor unit powered from outdoor unit | | |
| | MCA | A | 3.0 | 3.0 | 3.0 |
| Controls | Wireless Remote Controller (°F/°C Convertible) | | Standard | Standard | Standard |
| | Wired Remote Controller (°F/°C Convertible) | | Optional | Optional | Optional |
| | 24V Interface for 3rd Party Thermostat Control | | Optional | Optional | Optional |
| | Wi-Fi Control for Phone App Control | | Optional | Optional | Optional |
| Operating Range | Cooling Indoor DB Min - Max | °F(°C) | 60~90 (16~32) | 60~90 (16~32) | 60~90 (16~32) |
| | Heating Indoor DB Min - Max | °F(°C) | 32~86(0~30) | 32~86(0~30) | 32~86(0~30) |
| Piping | Pipe Connection Size - Liquid | in (mm) | Ø1/4” (6.35) | Ø1/4” (6.35) | Ø1/4” (6.35) |
| | Pipe Connection Size - Suction | in (mm) | Ø3/8" (9.52) | Ø1/2" (12.7) | Ø1/2" (12.7) |
| Indoor Coil | Face Area | Sq. Ft. | 2.81 | 2.81 | 2.81 |
| | No. Rows | | 2 | 2 | 2 |
| | Fins per inch | | 20 | 20 | 20 |
| | Circuits | | 2 | 3 | 3 |
| Airflow, Sound & Moisture | Number of Fan Speeds | | 4 | 4 | 4 |
| | Airflow (Low to Turbo) | CFM | 235 - 341 | 247 - 353 | 207-400 |
| | Sound Pressure (lowest to highest) | dB(A) | 35 - 40.0 | 37 - 43 | 38 - 47 |
| | Air throw Data | ft (m) | 22.0 (6.7) | 29.9 (9.1) | 29.9 (9.1) |
| | Moisture removal | Pint/h (L/h) | 2.16 (1.02) | 3.1 (1.4) | 4.6 (2.2) |
| | Field Drain Pipe Size O.D. | in (mm) | 3/8 (9.52) | 3/8 (9.52) | 3/8 (9.52) |
| Weight | Gross | lbs (kg) | 81.35(36.9) | 82.89(37.6) | 82.89(37.6) |
| | Net | lbs (kg) | 43.87(19.9) | 45.19(20.5) | 45.19(20.5) |

# COMPATIBILITY TABLE

| Indoor Unit | 40MCCAQ09XA3 | 40MCCAQ09XA3 | 40MCCAQ18XA3 | 40MCCAQ18XA3 |
|---|---|---|---|---|
| Capacity Settings | 6K | 9K | 12K | 18K |
| Outdoor Unit Single Zone | 38MARBQ06AA3 | 38MARBQ09AA3 | 38MARBQ12AA3 | 38MARBQ18AA3 |
| Outdoor Unit Multi-zone | 38MGRBQ18BA3 | | | |
| | 38MGHBQ24CA3 | | | |
| | 38MGHBQ30DA3 | | | |
| | 38MGRBQ36DA3 | | | |
| | 38MGHBQ36DA3 | | | |
| | 38MGRBQ48EA3 | | | |
| | 38MGHBQ48EA3 | | | |

**NOTE: Also backwards compatible with 38MA*R and 38MGR models.**

**Manufacturer reserves the right to change, at any time, specifications and designs without notice and without obligations.**

# CLEARANCE

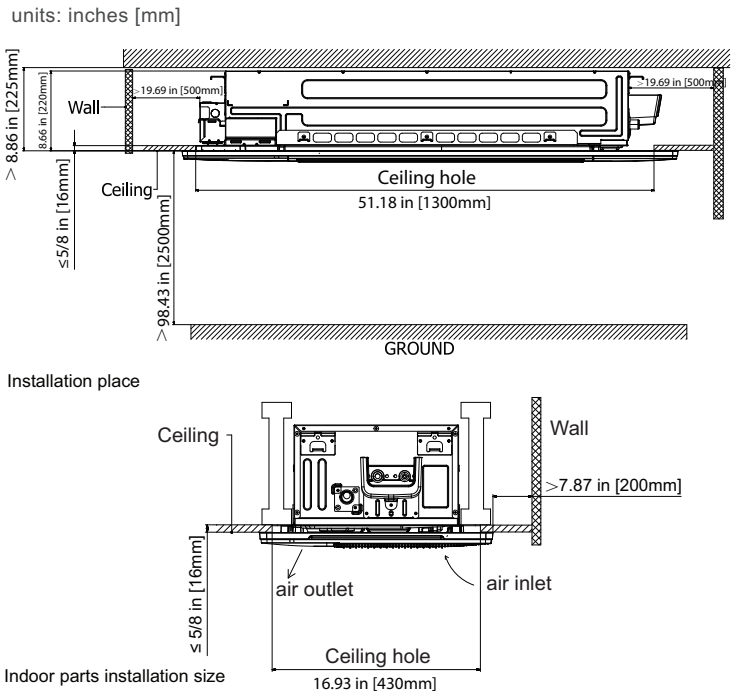


**Fig. 1 —Clearance**

# DIMENSIONS

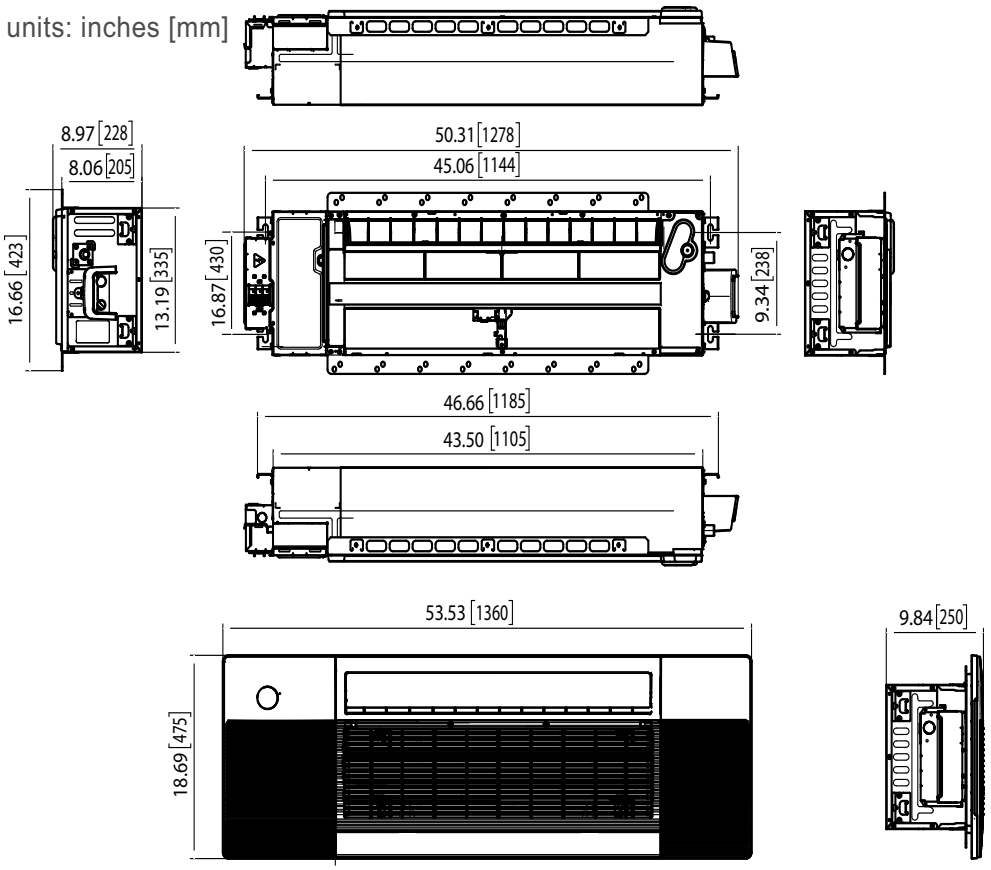


**Fig. 2 —Dimensions (All Sizes)**

**NOTE: Refer to the unit's installation instructions for further details.**

*** Performance may vary based on the outdoor unit it is matched to. See the compatible outdoor unit's pages for performance data.**

# APPLICATION DATA

## UNIT SELECTION

Select equipment to either match or handle slightly less than the anticipated peak load. This provides better humidity control, fewer unit cycles, and less part-load operation.

For units used in spaces with high sensible loads, base equipment selection on the unit sensible load, not on the total anticipated load. Adjust for the anticipated room wet bulb temperature to avoid undersizing the equipment.

## UNIT MOUNTING (INDOOR)

Refer to the unit's installation instructions for further details.

## UNIT MOUNTING (OUTDOOR)

**Refer to the unit's installation instructions for further details.**

Do not install the indoor or outdoor units in a location with special environmental conditions. For those applications, contact your ductless representative.

## SUPPORT

Adequate support must be provided to support the weight of all indoor units. Indoor unit weights, and the base unit dimensional drawings for the location of the mounting brackets, see "SPECIFICATIONS" on page 5.

## SYSTEM OPERATING CONDITIONS

| OPERATING RANGE MIN/ MAX F°/C° | | |
|---|---|---|
| | **Cooling** | **Heating** |
| Indoor DB | 61/90/(16/32) | 32/86(0/30) |
| Indoor WB | 59/84 (15/29) | |

## DRAIN CONNECTIONS

Install drains to meet the local sanitation codes. The in-ceiling cassette is supplied with a condensate lift pump that is capable of lifting the water 29.5in (750mm) above the top of the unit. A downward sloped condensate drain pipe can be used to dispose of water.

## REFRIGERANT LINES

### General refrigerant line sizing:

1. The outdoor units are shipped with a full charge of R410A refrigerant.
2. Refrigerant lines should not be buried in the ground. If it is necessary to bury the lines, not more than 36in (914mm) should be buried. Provide a minimum 6in (152mm) vertical rise to the service valves to prevent refrigerant migration.
3. Both lines must be insulated. Use a minimum of 1/2in (12.7mm) thick insulation. Closed-cell insulation is recommended in all long-line applications.
4. Special consideration should be given to isolating interconnecting tubing from the building structure. Isolate the tubing so that vibration or noise is not transmitted into the structure.

# WIRING

All wires must be sized per NEC (National Electrical Code) or CEC (Canadian Electrical Code) and local codes. Use Electrical Data table MCA (minimum circuit amps) and MOCP (maximum over current protection) to correctly size the wires and the disconnect fuse or breakers respectively.

**Recommended Connection Method for Power and Communication Wiring:**

The main power is supplied to the outdoor unit. The field supplied 14/3 stranded wire with ground with a 600 volt insulation rating, power/communication wiring from the outdoor unit to indoor unit consists of four (4) wires and provides the power for the indoor unit. Two wires are line voltage AC power, one is communication wiring terminal 3.

and the other is a ground wire. Wiring between indoor and outdoor unit is polarity sensitive. The use of BX wire is NOT recommended.

If installed in a high Electromagnetic field (EMF) area and communication issues exists, a 14/2 stranded shielded wire can be used to replace terminal 2 and terminal 3 between outdoor unit and indoor unit landing the shield onto ground in the outdoor unit only. Refer to Fig. 8 for more information.

**⚠ CAUTION**

**EQUIPMENT DAMAGE HAZARD**

Failure to follow this caution may result in equipment damage or improper operation.

**⚠ CAUTION**

**EQUIPMENT DAMAGE HAZARD**

Failure to follow this caution may result in equipment damage or improper operation.

Be sure to comply with local codes while running wire from the indoor unit to the outdoor unit.

Every wire must be connected firmly. Loose wiring may cause the terminal to overheat or result in unit malfunction. A fire hazard may also exist. Ensure all wiring is tightly connected.

No wire should touch the refrigerant tubing, compressor or any moving parts.

Disconnecting means must be provided and shall be located within sight and readily accessible from the air conditioner.

## CONTROL SYSTEM

The indoor unit is equipped with a microprocessor control to perform two functions:

1. Provide safety for the system
2. Control the system and provide optimum levels of comfort and efficiency.

The main microprocessor is located on the control board of the fan coil unit (outdoor units have a microprocessor too) with thermistors located in the fan coil air inlet and on the indoor coil. Heat pump units have a thermistor on the outdoor coil. These thermistors monitor the system operation to maintain the unit within acceptable parameters and control the operating mode.

# WIRELESS REMOTE CONTROL




**Fig. 3 — Wireless Remote Controller RG10L3**

1. A wireless remote control is supplied for system operation of all in-ceiling cassette units.
2. Each battery operated wireless (infrared) remote control may be used to control more than one unit.

## WIRED REMOTE CONTROL (OPTIONAL)

- **KSACN0101AAA (Timer Function)**
  **Extension Wire Part Number: 17401204001601**
- **KSACN0701AAA (7 Day Programmable)**
  **Extension Wire Part Number: 17401204000769**

1. Optional wired remote controller used for system operation of all in-ceiling cassette units.
2. Kit includes a wired remote controller and a connecting cable.
3. Connect the wire terminal between the remote controller and the indoor unit.
4. Display in °F or °C and temperature increments every 1°F or every 1°C.



**Fig. 4 —KSACN0101AAA (Timer Function)**




**Fig. 5 —KSACN0701AAA (7 Day Programmable)**

# AIR FLOW DATA

| SYSTEM SIZE | | 6K/9K | 12K | 18K |
|---|---|---|---|---|
| | | (208/230V) | (208/230V) | (208/230V) |
| Indoor (CFM) | Turbo | 341 | 353 | 400 |
| | High | 294 | 312 | 352 |
| | Medium | 259 | 282 | 300 |
| | Low | 235 | 247 | 207 |

# AIR THROW DATA

| SYSTEM SIZE | 6K/9K | 12K | 18K |
|---|---|---|---|
| | (208/230V) | (208/230V) | (208/230V) |
| Indoor ft (m) | 22.0 (6.7) | 29.9 (9.1) | 29.9 (9.1) |

# SOUND PRESSURE

| CONSOLE | | 6K/9K | 12K | 18K |
|---|---|---|---|---|
| | | (208/230V) | (208/230V) | (208/230V) |
| Cooling operation Indoor Sound Pressure | dBA at (100% / 80% / 60% / 40% CFM) | 40.0 / 38.4 / 36.7 / 35.1 | 43.4 / 41.6 / 39.5 / 37.5 | 47.2 / 44.8 / 41.8 / 38.3 |
| Heating operation Indoor Sound Pressure | dBA at (100% / 80% / 60% / 40% CFM) | 36.4 / 34.0 / 31.5 / 28.8 | 38.3 / 36.4 / 35.2 / 31.0 | 48.0 / 44.7 / 41.0 / 36.3 |

# SOUND PRESSURE TESTING METHOD

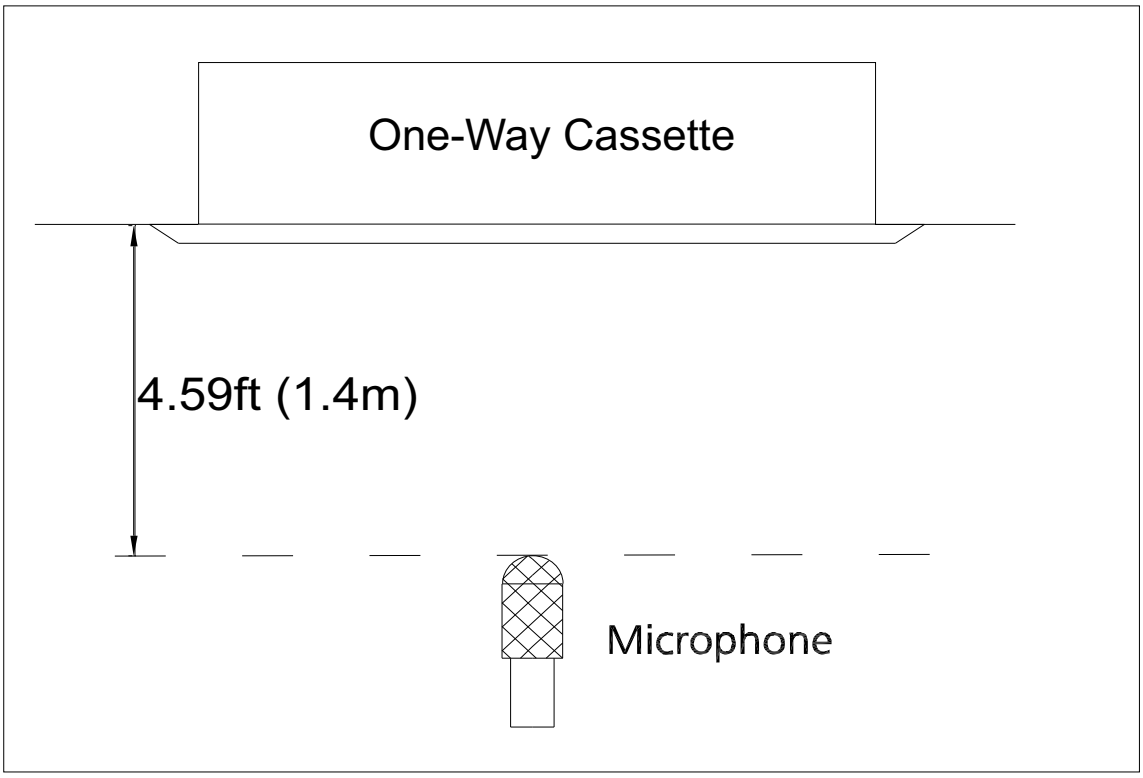


**Fig. 6 — Sound Pressure Testing Method**

# FAN AND MOTOR SPECIFICATIONS

| DUCTED SIZE | | | 6K/9K | 12K | 18K |
|---|---|---|---|---|---|
| | | | (208/230 V) | (208/230 V) | (208/230 V) |
| INDOOR FAN | material | | Acrylontrile Styrene +30%GF | Acrylontrile Styrene +30%GF | Acrylontrile Styrene +30%GF |
| | Type | | GL-94*820-IN | GL-98*538-I | GL-98*538-I |
| | Diameter | inch (mm) | 3.7(94) | 3.86(98) | 3.86(98) |
| | Height | inch (mm) | 32.28(820) | 21.18(538) | 21.18(538) |
| INDOOR FAN MOTOR | Model | | ZKFN-30-8-43 | ZKFN-30-8-43 | ZKFN-30-8-43 |
| | Volts | V | 310 | 310 | 310 |
| | Type | | DC | DC | DC |
| | Phase | | 3 | 3 | 3 |
| | FLA | | 0.8 | 1.5 | 1.5 |
| | Insulation class | | E | E | E |
| | Safe class | | IP20 | IP20 | IP20 |
| | Input | W | 34.9 | 34.9 | 34.9 |
| | Output | W | 30 | 30 | 30 |
| | Range of current | Amps | 0.69±10% | 0.69±10% | 0.69±10% |
| | Rated current | Amps | 0.35 | 0.35 | 0.35 |
| | Rated HP | HP | 1/25 | 1/25 | 1/25 |
| | Speed | rev/min | 1024/944/784 | 1075/982/797 | 1344/1184/1024 |
| | Rated RPM | rev/min | 1024 | 1075 | 1344 |
| | Max. input | W | 78.6 | 78.6 | 78.6 |

# CONNECTION DIAGRAM

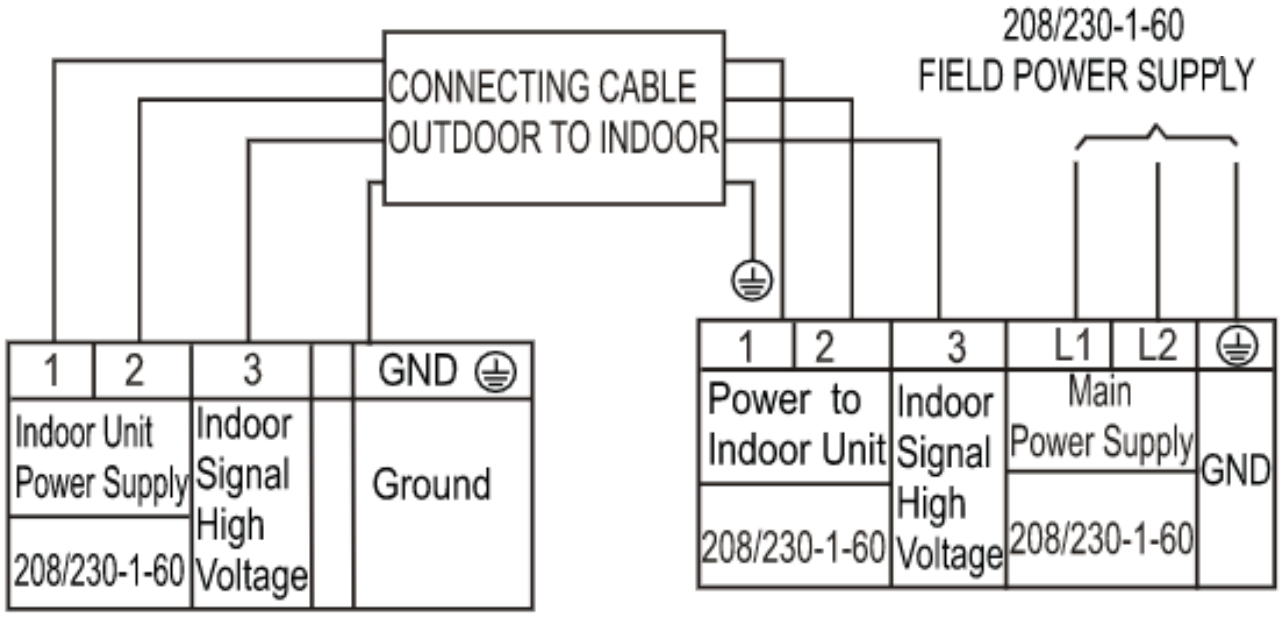


**Fig. 7 — Wiring Diagram (All Sizes)**

:

# WIRING DIAGRAM

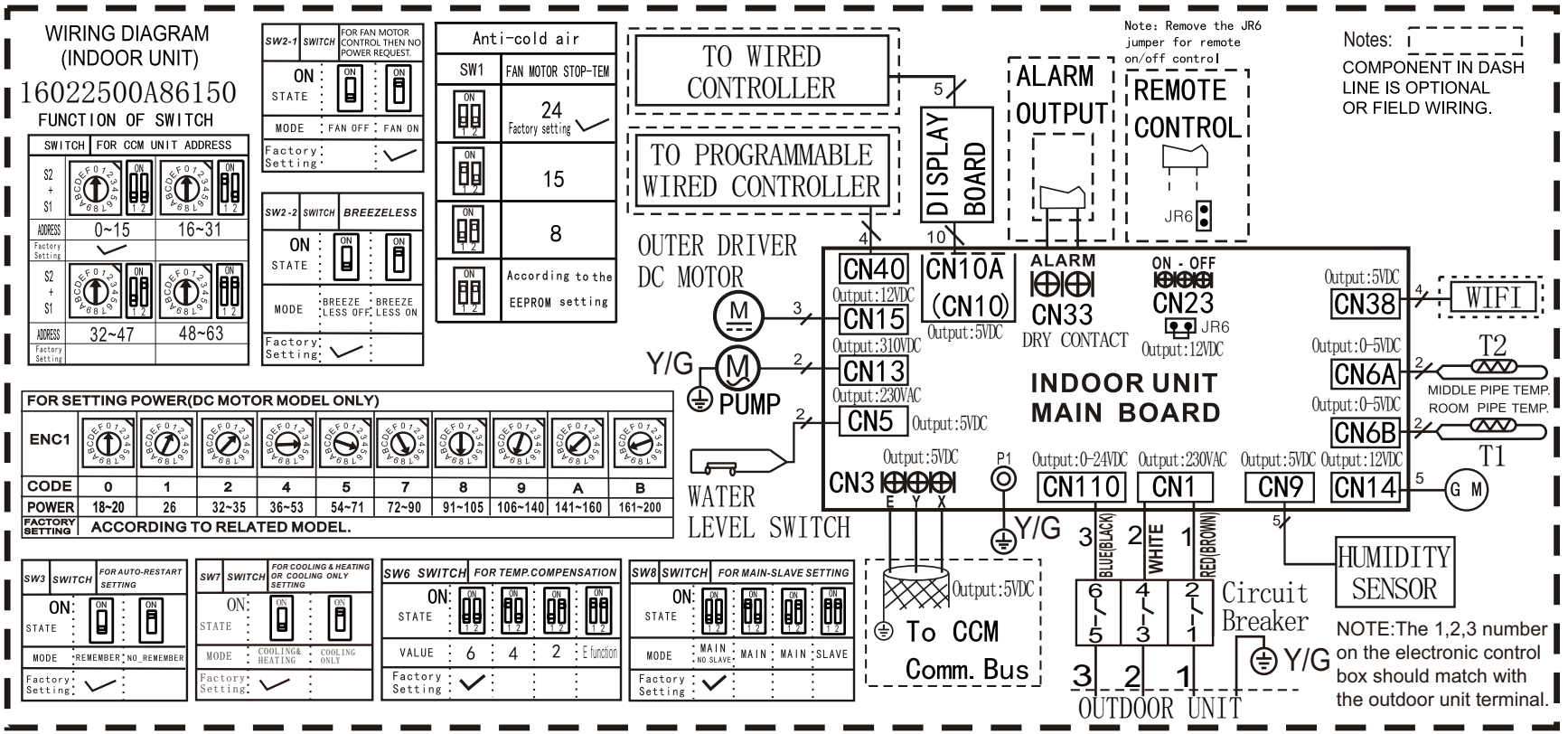


**Fig. 8 — Wiring Diagram All Sizes**

## DIP SWITCH SETTINGS

| NO. | DIAL CODE | FUNCTION | ON | OFF | 1 ON & 2 ON | 1 ON & 2 OFF | 1 OFF & 2 ON | 1 OFF & 2 OFF |
|---|---|---|---|---|---|---|---|---|
| 1 | SW2-1 | Fan speed control after compressor stops | Lowest speed | Default fan stop | N/A | N/A | N/A | N/A |
| 2 | SW2-2 | Breezeless function | Breezeless on | Default Breezeless off | N/A | N/A | N/A | N/A |
| 3 | SW1 | Indoor fan stop temperature (TEL0) for normal anti-cold air function in the HEATING mode. | N/A | N/A | According to EEROM setting | 15°C | 8°C | [Default] 24°C |
| 4 | SW6 | Heating temperature compensation | N/A | N/A | According to EEROM setting | 4°C | 2°C | [Default] 6°C |
| 5 | S1+Rotary Switch S21 | Central control air selection | N/A | N/A | S2 + 48 | S2 + 16 | S2 + 32 | S2 |
| 6 | SW8 | Settings for Twins connection | | | Follower unit | Leader unit, has a follower unit | Leader unit, has a follower unit | Leader unit, no follower unit |
| 7 | Rotary Switch ENC1 | Capacity selection | 6K: ENC1=0; 9K: ENC1=1; 12K: ENC1=2; 18K:ENC1=4 | | | | | |

**NOTE: 6k/9K unit (default is 9K). 12k/18k unit (default is 18k)**

# GUIDE SPECIFICATIONS

## INDOOR IN-CEILING CASSETTE DUCTLESS UNITS

**Size Range: 2 to 4 Ton Nominal Cooling and Heating Capacity**

**Model Number: 40MCCAQ**

## Part 1 - GENERAL

### 1.01 System Description

Indoor, in-ceiling cassette, direct-expansion fan coils are matched with a heat pump outdoor unit.

### 1.02 Agency Listings

Units are rated per AHRI Standards 210/240 and listed in the AHRI directory as a matched system.

### 1.03 Delivery, Storage, And Handling

Units are stored and handled per the unit manufacturer's recommendations.

### 1.04 Warranty (For Inclusion By Specifying Engineer)

## Part 2 - PRODUCTS

### 2.01 Equipment

**A. General:**

Indoor, direct-expansion, ceiling-mounted fan coil. Unit is complete with a cooling/heating coil, fan, fan motor, piping connectors, electrical controls, microprocessor control system, and an integral temperature sensor.

B. **Unit Cabinet:**

Cabinet is constructed of zinc-coated steel. Fully insulated discharge and inlet grilles are attractively styled, high-impact polystyrene. Grille has hinges and can be opened to obtain access to the cleanable filters, indoor fan motor and control box.

C. **Fans**:

1. The fan is a centrifugal direct-drive blower type with an air intake in the center of the unit and a discharge at the perimeter. An automatic, motor-driven vertical air sweep is provided standard. Automatic motor-driven louvers are provided standard and are adjustable for a 2, 3 or 4-way discharge.
2. The air sweep operation is user selectable.

D. **Coil**:

The coil is a copper tube with aluminum fins and galvanized steel tube sheets. Fins are bonded to the tubes by mechanical expansion and specially hydrophilic pre-coated for enhanced wet-ability. A drip pan under the coil has a factory installed condensate lift pump and a drain connection for a hose attachment to remove condensate.

E. **Motors**:

Motors are open drip−proof, with a permanently lubricated ball bearing. The fan motors is 7−speed.

F. **Controls**:

Controls consist of a microprocessor-based control system which controls the space temperature, determines the optimum fan speed, and runs self diagnostics. The temperature control range is 61°F to 90°F (16°C to 32°C) in increments of 1°F or 1°C, and has a 46°F Heating Mode (Heating Setback). The wireless remote controller, has the ability to act as the temperature sensing location for room comfort.

**The unit has the following functions as a minimum:**

1. An automatic restart after a power failure at the same operating conditions as at the failure.
2. A timer function to provide a minimum 24−hour timer cycle for system Auto Start/Stop.
3. Temperature−sensing controls sense return air temperature.
4. Indoor coil freeze protection.
5. Wireless infrared remote control to enter set points and operating conditions.
6. Automatic air sweep control to provide on or off activation of air sweep louvers.
7. Dehumidification mode, which provides increased latent removal capability by modulating system operation and set point temperature.
8. Fan−only operation to provide room air circulation when no cooling is required.
9. Diagnostics provide continuous checks of unit operation and warn of possible malfunctions. Error messages appear on the unit.
10. The fan speed control is user-selectable: high, medium, low, or microprocessor controlled automatic operation during all operating modes.
11. Automatic heating−to−cooling changeover in the heat pump mode. Control includes deadband to prevent rapid mode cycling between heating and cooling.
12. Indoor coil high temperature protection detects excessive indoor discharge temperature when the unit is in the heat pump mode.

**G. Filters:**

Unit has a factory-supplied cleanable filter for easy cleaning.

**H. Electrical Requirements:**

The indoor fan motor operates on 208-230V. Power is supplied from the outdoor unit.

**I. Operating Characteristics:**

The system has a minimum SEER (Seasonal Energy Efficiency Ratio) and HSPF at AHRI conditions, as listed on the specifications table of matching ODU.

**J. Refrigerant Lines:**

All units should have refrigerant lines that can be oriented to connect from the left, right or back of unit. Both refrigerant lines must be insulated.

© 2023 Carrier. All rights reserved.

Edition Date: 03/23

**Catalog No: 40MCCAQ-01PD**

Replaces: NEW

**Manufacturer reserves the right to change, at any time, specifications and designs without notice and without obligations.**