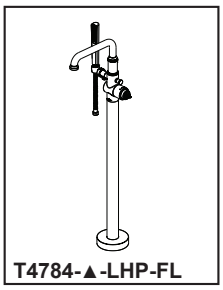

T4784-▲-LHP-FL

see what Delta can do℠

FLOOR MOUNT TUB FILLER

■ Broderick™ Bath Collection

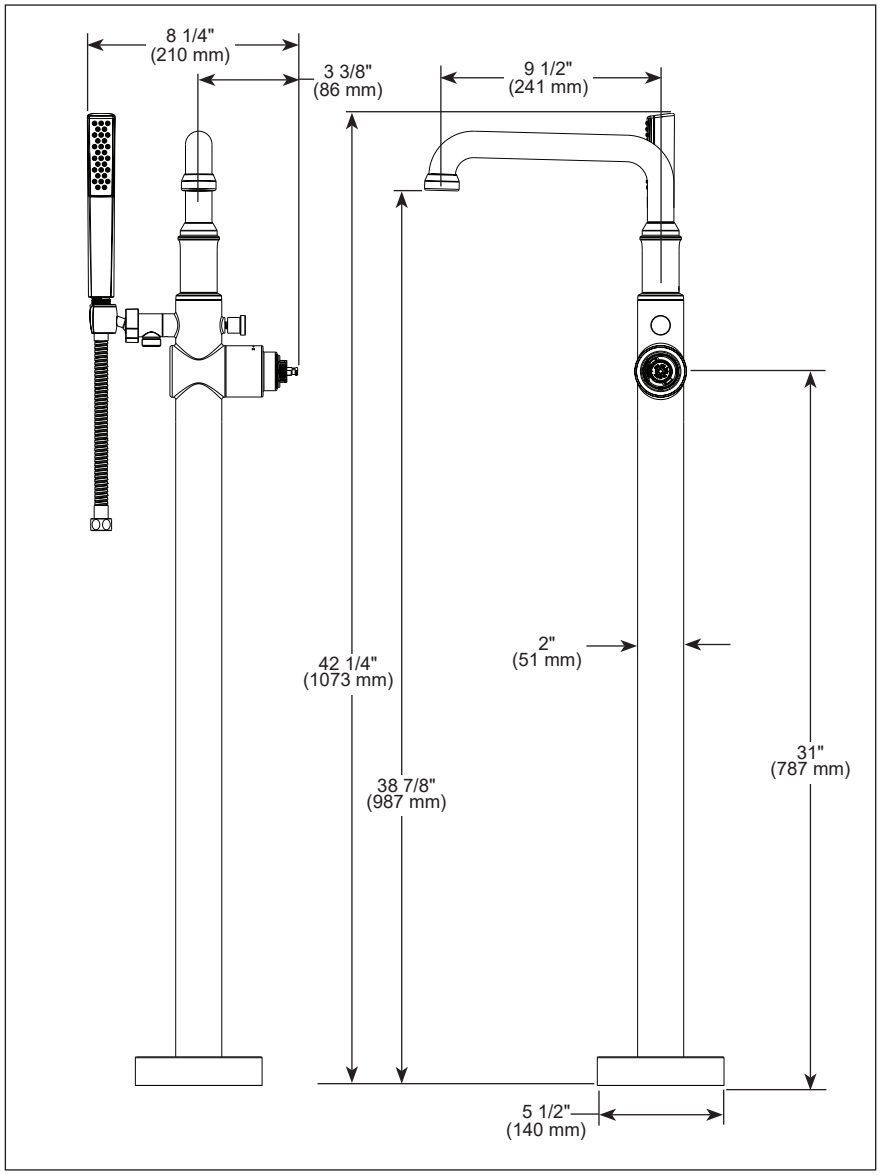

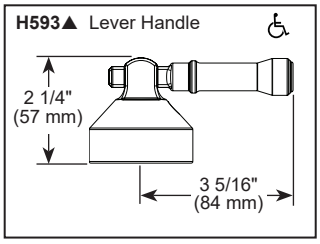

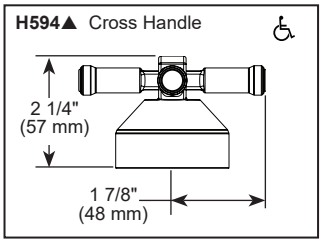

▲ Designate Proper Finish Suffix

FEATURES:

- Lumicoat™ Finish (-PR models only)
- Lumicoat™ Finishes easily wipe clean without cleaners and chemicals on the products most commonly touched areas

STANDARD SPECIFICATIONS:

- Hand shower max flow rate 1.75 gpm @ 80 psi, 6.6 L/min @ 550 kPa
- Spout flow up to 10 gpm @ 60 psi, 37.8 L/min @ 410 kPa
- Hot and cold indicators
- Fixed spout
- 60"-82" stretchable hose with metal fittings
- Auto resetting diverter
- Dual integral check valves
- Optional pressure balanced cartridge (RP46074) available
- Pivoting hand shower holder
- Must order R4700-FL or R4700-FLWS
- LHP - Less Handle program. See handle options below.

WARRANTY

- Parts and Finish - Lifetime limited warranty; or for commercial purchasers, 10 years for multi-family residential (apartments and condominiums) and 5 years for all other commercial uses, in each case from the date the product is received by the original purchaser or their authorized representative (installation contractor, etc.).
- Electronic Parts and Batteries (if applicable) - 5 years from the date the product is received by the original purchaser or their authorized representative (installation contractor, etc.); or for commercial purchasers, 1 year from the date the product is received by the original purchaser or their authorized representative (installation contractor, etc.). No warranty is provided on batteries.

⚠ **WARNING: Risk of personal injury.** Do not use the tub filler as a grab bar or support bar. Install this product according to the installation guide.

WaterSense Meets EPA Criteria
Certified by CSA Group
HAND SHOWER
DOUCHE À MAIN
REGADERA DE MANO

COMPLIES WITH:

- ASME A112.18.1/ CSA B125.1
- ♿ Indicates compliance to ICC/ANSI A117.1 - Valve control only
- EPA WaterSense®

Delta reserves the right (1) to make changes in specifications and materials, and (2) to change or discontinue models, both without notice or obligation. Dimensions are for reference only. See current full-line price book or www.deltafaucet.com for finish options and product availability.

DSP-B-T4784-LHP-FL Rev. A

Delta Faucet Company
55 E. 111th Street, Indianapolis, IN 46280
350 South Edgeware Road, St. Thomas, ON N5P 4L1
© 2023 Delta Faucet Company