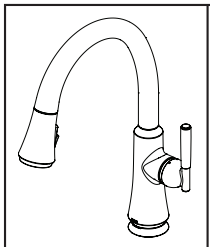

9179TL-▲-DST

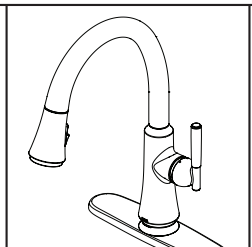

With Optional Escutcheon **RP47274▲**

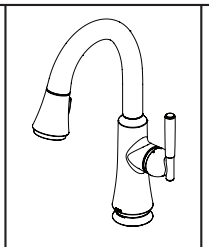

9979TL-▲-DST

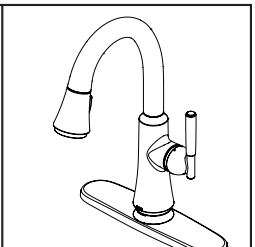

With Optional Escutcheon **RP47274▲**

Submitted Model No.: _____

Specific Features: _____

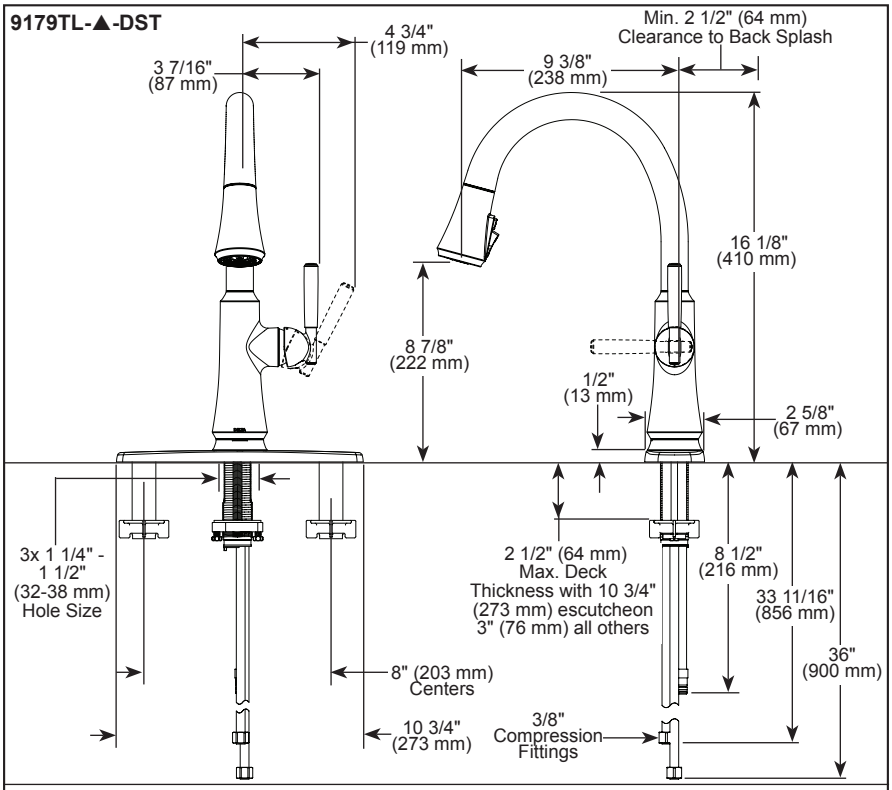

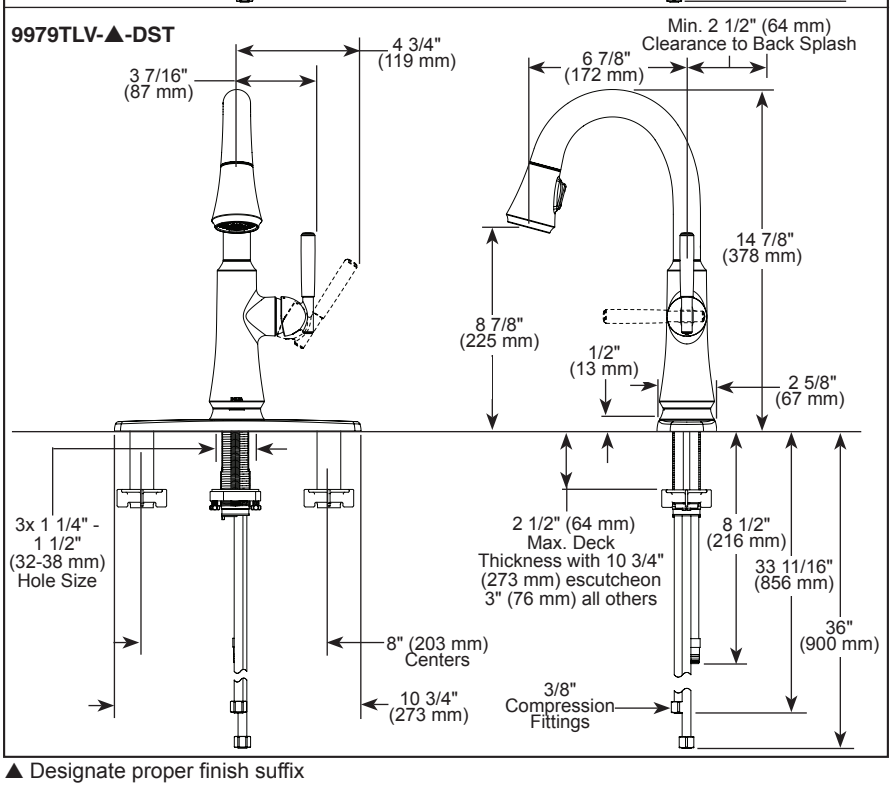

▲ Designate proper finish suffix

Delta reserves the right (1) to make changes in specifications and materials, and (2) to change or discontinue models, both without notice or obligation. Dimensions are for reference only. See current full-line price book or www.deltafaucet.com for finish options and product availability.

DSP-K-9179TL-DST Rev. A

DELTA

see what Delta can do℠

KITCHEN FAUCETS

- Coranto™ Collection
- Single Handle Pull-Down

FEATURES:

- Touch$_2$O® with Touchless Technology
- DIAMOND Seal® Technology
- Touch-Clean® Technology
- MagnaTite® Docking System
- ShieldSpray™ Technology

STANDARD SPECIFICATIONS:

- Maximum 1.8 gpm @ 60 psi, 6.8 L/m in @ 414 kPa
- One or three hole mount (escutcheon included with kitchen models, for prep models order separately)
- Diamond coated ceramic cartridge
- 3/8" O.D. straight, staggered PEX supply lines
- Spout rotates 360°
- Red/Blue indicator markings
- Dual integral check valves in sprayer assembly
- Three-function wand; Aerated stream, spray or ShieldSpray™
- Two-function wand; Aerated stream or spray (bar/prep models only)
- LED indicator light signals on-off, water temperature and low batteries
- Uses 6 AA (included) or 6 C (optional) batteries
- Toggle between Touchless and Touch$_2$o® only settings

WARRANTY

- Parts and Finish - Lifetime limited warranty; or for commercial purchasers, 10 years for multi-family residential (apartments and condominiums) and 5 years for all other commercial uses, in each case from the date of purchase.
- Electronic Parts and Batteries (if applicable) - 5 years from the date of purchase; or for commercial purchasers, 1 year from the date of purchase. No warranty is provided on batteries.

COMPLIES WITH:

- ASME A112.18.1/ CSA B125.1
- ASME A112.18.6
- ♿ Indicates compliance to ICC/ANSI A117.1- Valve control only

Delta Faucet Company
55 E. 111th Street, Indianapolis, IN 46280
350 South Edgeware Road, St. Thomas, ON N5P 4L1
© 2023 Delta Faucet Company