Oakville | 30486WGBO

Job Name:_____ Job Type:_____ Quantity:_____ Comments:_____



PRODUCT DESCRIPTION

Bold, exterior design of Die Cast aluminum finished in Black Oxide support elongated cylinders of clear Waterglass. Light is gently diffused by a second inner cylinder of Satin White glass.

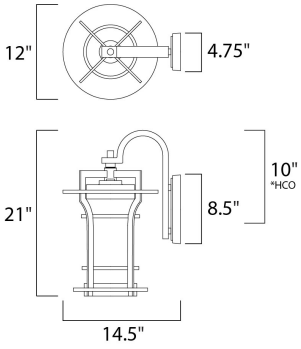

*height from center of outlet to the top of the fixture

MEASUREMENTS

DIMENSION	: 12" W x 21" H x 14.5" Ext
BACK PLATE	: 4.75" W x 8.5" H x 10" HCO
HANGING WEIGHT	: 13.4 lb

LAMPING

INPUT VOLTAGE	: 120V
BULB	: 1 x 60W Incandescent E26 Medium , 60W Total
BULB INCLUDED	: (Not Included)
DIMMABLE	: Yes

FINISHES OPTION

Black Oxide (BO)

GLASS

Water Glass WG

MATERIAL

Aluminum, Glass

RATINGS

cETLus
Wet Location

ADDITIONAL

OPERATING TEMPERATURE:
-20°C (-4°F), 40°C (104°F)

PHOTOMETIC: Report Found Online

Always consult a qualified electrician before installing any lighting product.

MAXIM LIGHTING®

WESTERN DISTRIBUTION CENTER (HEADQUARTER)
253 NORTH VINELAND AVE I CITY OF INDUSTRY, CA 91746

EASTERN DISTRIBUTION CENTER
101 GARDNER PARK | PEACHTREE CITY, GA 30269

P. 626.956.4200 I F. 626.956.4225 I maximlighting.com