Tecturis E
Single-Hole Faucet 80 with Pop-Up Drain, 1.2 GPM
Finish: **Brushed Nickel** Part no. : **73002821**

Description

Features

- Consists of: Single-Hole Faucet, Pop Up Drain
- handle design: lever handle
- Spray pattern: Waterfall Stream
- Maximum flow rate: 1.2 GPM
- ceramic cartridge

Item details

List Price $ 356.00

Technology

AirPower | Eco Smart+ | Comfort Zone

Design awards

DESIGN AWARD 2023

Compliance / Sustainability

ADA | WaterSense Meets EPA Criteria | UPC | MAP

Product image



Scale drawing

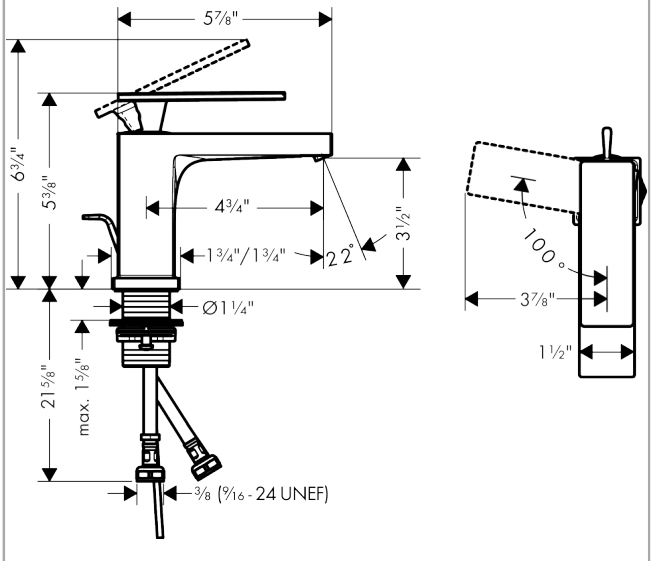

Tecturis E
Single-Hole Faucet 80 with Pop-Up Drain, 1.2 GPM
Finish: **Brushed Nickel** Part no. : **73002821**

Exploded drawing

Year of production: **>02/24**

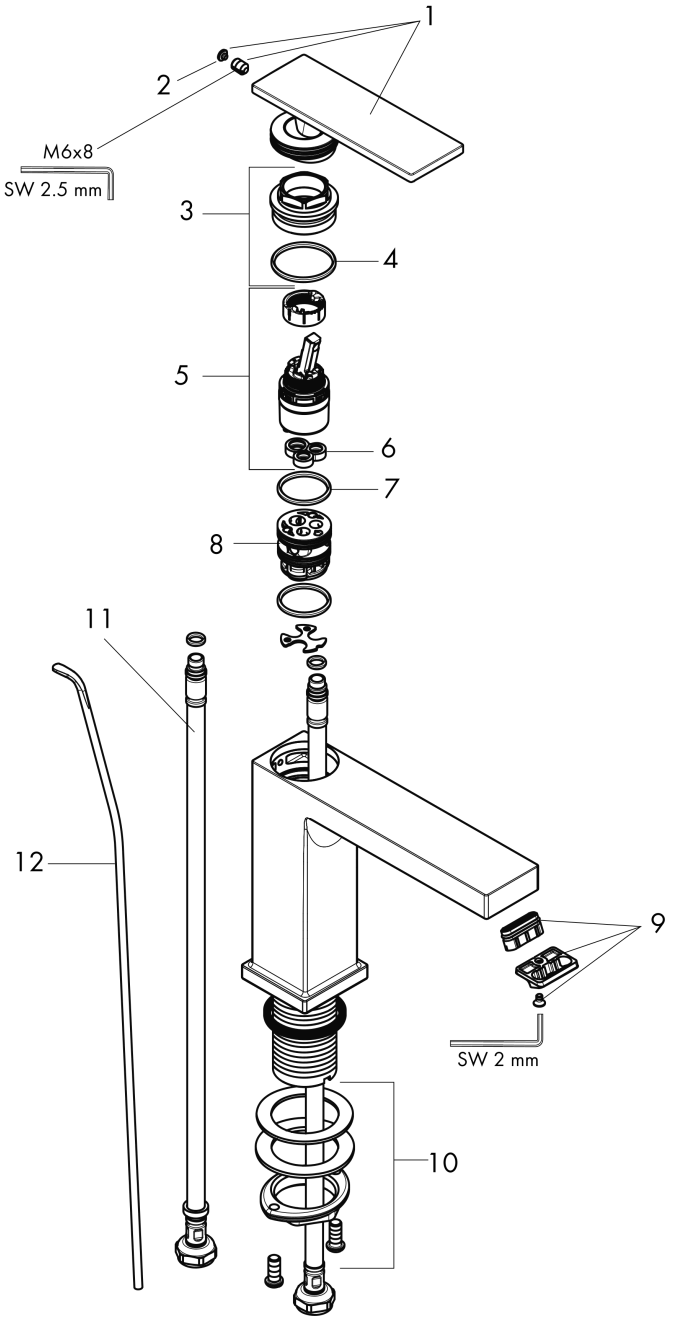

hansgrohe

Tecturis E
Single-Hole Faucet 80 with Pop-Up Drain, 1.2 GPM
Finish: **Brushed Nickel** Part no. : **73002821**



Spare parts list

Year of production: **>02/24**

Pos.	Description	Part no.	Price	PU
1	handle	94992820	-	1
2	screw cover	93983000	-	1
3	nut	94092000	-	1
4	O-ring 29x2	98391000	-	1
5	cartridge, assy	93760000	-	1
6	seal	93383000	-	1
7	O-ring 25x1,5	98146000	-	1
8	adapter for cartridge	98866000	-	1
9	aerator cpl.	94994000	-	1
10	fixing set (Ø 32)	13961000	-	1
11	connection hose 23½" M8x0,75 3/8"	98600001	-	1
12	pull rod	96657820	-	1
a	pop up waste	88509820	-	1
b	O-ring 23x2	98398000	-	1