REZNOR®

**Revision: UBXC-UDXC-IOM (08-26) 1042980-K**

Supersedes: UBXC-UDXC-IOM (04-26) 1042980-J

# GAS-FIRED UNIT HEATER INSTALLATION, OPERATION, AND MAINTENANCE

## MODELS UBXC AND UDXC

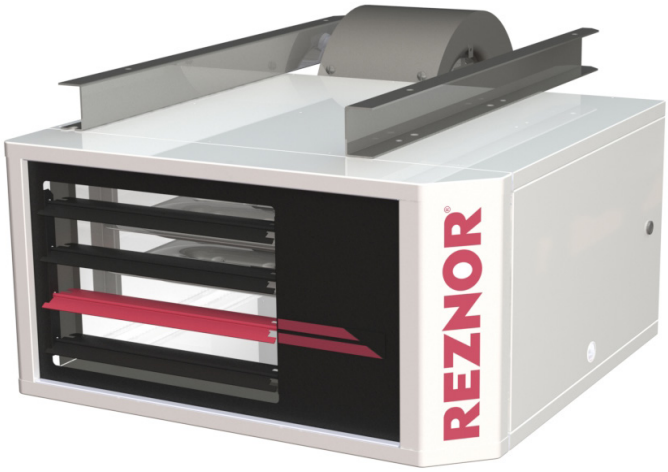

## ⚠ DANGER ⚠

**FIRE OR EXPLOSION HAZARD**

- **Failure to follow safety warnings exactly could result in serious injury, death, or property damage.**
- **Improper installation, adjustment, alteration, service, or maintenance can cause serious injury, death, or property damage.**
- **Installation and service must be performed by a qualified installer, service agency, or the gas supplier.**
- **Be sure to read and understand the installation, operation, and service instructions in this manual.**
- **Do not store or use gasoline or other flammable vapors and liquids in the vicinity of this or any other appliance.**

**WHAT TO DO IF YOU SMELL GAS**

- **Do not try to light any appliance.**
- **Do not touch any electrical switch; do not use any phone in your building.**
- **Leave the building immediately.**
- **Immediately call your gas supplier from a phone remote from the building. Follow the gas supplier's instructions.**
- **If you cannot reach your gas supplier, call the fire department.**

**DO NOT DESTROY. PLEASE READ CAREFULLY. KEEP IN A SAFE PLACE FOR FUTURE REFERENCE.**

# TABLE OF CONTENTS

**GENERAL INFORMATION . . . 4**
Important Safety Information . . . 4
Warranty . . . 5
Model Configuration . . . 5
Certification . . . 5
Installation Codes . . . 5
Heater Location . . . 6
Clearances . . . 6
Heater Throw . . . 6
Mounting Height Requirements . . . 12
Halogenated Hydrocarbons . . . 12
Dimensions . . . 13
Weights . . . 16
Combustion Air Requirements . . . 16
Combustion Air Requirements for Separated-Combustion Units . . . 16
Combustion Air Requirements for Standard Units . . . 16
**INSTALLATION . . . 17**
Unpacking and Inspection . . . 17
Pre-Installation Checklist . . . 17
Heater Suspension . . . 18
Suspension of Heater Using Option CK8 or CK10 Hanger Kit . . . 19
Suspension of Heater Using Option CK22 Hanger Kit (Model UDXC, Unit Sizes 30–125) . . . 19
Heater Suspension Using Field-Supplied Threaded Rods . . . 19
Suspension of Heater with Downturn Nozzle . . . 19
Piping Connections . . . 20
Gas Supply Pressure . . . 20
Gas Supply Piping . . . 20
Supply Piping Connections . . . 21
Electrical Connections . . . 22
Supply Wiring Connection . . . 22
Control Connections . . . 23
Circuit Board Connection . . . 23
**VENTING . . . 24**
General Venting Requirements . . . 25
Condensation Mitigation Requirements . . . 25
Vent Pipe Size Requirements . . . 26
Vent System Sealing Requirements . . . 26
Vent System Support Requirements . . . 28
Vent Terminal Requirements . . . 28
Venter (Flue) Outlet Diameter . . . 30
Vent System Installation Procedures . . . 30
Category I Residential Installations with Vertical Dedicated Vent (Model UDXC) . . . 30
Category I Commercial/Industrial/Residential Installations with Vertical Dedicated Vent (Model UDXC) . . . 31
Category I Residential Installations with Common Vent (Model UDXC) . . . 32
Category III Commercial/Industrial Installations . . . 34
Category III Residential Installations (Model UDXC) . . . 36

## TABLE OF CONTENTS—CONTINUED

**CONTROLS . . . 37**
Pressure Switch . . . 38
High Temperature Limit Switch . . . 38
Venter Wheel and Motor Assembly . . . 39
Flame Rollout Switch (Model UDXC, Unit Sizes 30–125) . . . 39
Combination Gas Valve . . . 39
Fan Motor (Model UDXC) . . . 39
Thermostat . . . 39
Circuit Board (DSI Control Module) . . . 40
Multiple Heater Control . . . 40
**OPERATION . . . 40**
Pre-Startup Checklist . . . 41
Startup . . . 41
Operating Sequences . . . 42
Vent System Testing . . . 45
Post-Startup Checklist . . . 45
**ADJUSTMENTS . . . 46**
Measure and Adjust Manifold (Outlet) Gas Pressure . . . 46
Pressure Switch Replacement . . . 48
**MAINTENANCE . . . 49**
Service Checklist . . . 49
Maintenance Procedures . . . 49
Burner Maintenance . . . 50
Burner Orifice Maintenance . . . 52
Heat Exchanger Maintenance . . . 52
Ignition System Maintenance . . . 52
Fan and Motor Assembly Maintenance . . . 53
Venter Wheel and Motor Assembly Maintenance . . . 54
Combination Gas Valve Maintenance . . . 55
Pressure Switch Maintenance . . . 55
High Temperature Limit Control Maintenance . . . 55
Transformer Maintenance . . . 56
Disconnect Switch Maintenance . . . 56
Vent or Vent/Combustion Air System Maintenance . . . 56
Flame Rollout Switch Maintenance (Model UDXC, Unit Sizes 30–125) . . . 56
**TROUBLESHOOTING . . . 56**
General Troubleshooting . . . 56
Unit Troubleshooting Using DSI Control Module . . . 58
**INSTALLATION RECORD (TO BE COMPLETED BY INSTALLER) . . . 60**

## GENERAL INFORMATION

- This unit heater has been tested for capacity and efficiency so as to provide many years of safe and dependable comfort providing it is properly installed and maintained. With regular maintenance, this unit will operate satisfactorily year after year. Abuse, improper use, and/or improper maintenance can shorten the life of the appliance and create unsafe hazards.
- To achieve optimum performance and minimize equipment failure, it is recommended that periodic maintenance be performed on this unit. The ability to properly perform maintenance on this equipment requires certain tools and mechanical skills.
- This manual applies only to the models listed. Accessories referenced may not apply to all models.

### Important Safety Information

Please read all information in this manual thoroughly and become familiar with the capabilities and use of your appliance before attempting to operate or maintain this unit. Pay attention to all dangers, warnings, cautions, and notes highlighted in this manual. Safety markings should not be ignored and are used frequently throughout to designate a degree or level of seriousness.

**DANGER:** A danger statement describes a potentially hazardous situation that if not avoided, will result in severe personal injury or death and/or property damage.

**WARNING:** A warning statement describes a potentially hazardous situation that if not avoided, can result in severe personal injury and/or property damage.

**CAUTION:** A caution statement describes a potentially hazardous situation that if not avoided, can result in minor or moderate personal injury and/or property damage.

**NOTE:** A note provides important information that should not be ignored.

### ⚠ DANGER ⚠

- **Gas-fired appliances are not designed for use in hazardous atmospheres containing flammable vapors or combustible dust, in atmospheres containing chlorinated or halogenated hydrocarbons, or in applications with airborne silicone substances.**
- **Should overheating occur, or the gas supply control system fail to shut off the flow of gas, shut off the manual gas valve to the unit before shutting off the electrical supply.**
- **Do not use this appliance if any part has been under water. Immediately call a qualified service technician to inspect the appliance and replace any gas control that has been under water.**
- **Installation should be done by a qualified agency in accordance with these instructions. The qualified service agency installing this heater is responsible for the installation.**

### ⚠ WARNING ⚠

- **This appliance is not intended for use by persons with reduced physical, sensory, or mental capabilities or lack of experience and knowledge, unless they have been given supervision or instruction concerning use of the appliance by a person responsible for their safety.**
- **Children should be supervised to ensure that they do not play with the appliance.**

### ⚠ CAUTION ⚠

**To prevent damage to the unit or to its internal components, it is recommended that two wrenches be used when loosening or tightening nuts. Do not overtighten!**

## Warranty

Refer to the limited warranty form in the literature bag provided with the unit. The warranty is void if:

- Wiring is not in accordance with the diagram furnished with the heater.
- The unit is installed without proper clearance to combustible materials.
- A fan model is connected to a duct system or if the air delivery system is modified.

## Model Configuration

Model UBXC is a power-vented blower-type unit. Model UDXC is a power-vented fan-type unit. For an installation location where dirt, dust, or other airborne contaminants are present in the indoor environment, a separated-combustion unit that uses outside air for combustion is recommended. Separated-combustion units are designed to separate air for combustion and flue products from the environment of the building in which the unit is installed. Using a separated-combustion unit reduces the buildup of contaminants on the burner. Any buildup on the burner adversely affects the combustion process. Either model can be converted to a separated-combustion unit using a shipped-separate conversion kit (option SC1) in accordance with the conversion instructions provided with the kit. The unit is hereafter referred to as ***separated-combustion unit*** for a unit that has been converted or ***standard unit*** for an unconverted unit.

**⚠ DANGER ⚠**

**Ensure that venting and combustion air are in accordance with this manual for standard units or with the separated-combustion conversion instructions for separated-combustion units.**

## Certification

**⚠ DANGER ⚠**

**Heaters certified for residential use are intended for the heating of non-living spaces that are attached to or part of a structure that contains space for family living quarters. They are not intended to be the primary source of heat in residential applications or to be used in sleeping quarters.**

- These unit heaters are listed by Intertek for use in industrial and commercial installations in the United States and Canada. In addition, model UDXC in unit sizes 30, 45, 60, 75, 100, and 125 is listed in the United States and Canada as a utility heater for use in non-living spaces that are attached to, adjacent to, or part of a structure that contains space for family living quarters.
- All models and unit sizes are available for use with either natural or propane gas. The type of gas, the gas input rate, and the electrical supply requirement are shown on the heater rating plate. Check the rating plate to verify that the heater is appropriate for the installation site.

## Installation Codes

- These units must be installed in accordance with local building codes. In the absence of local codes, in the United States, the unit must be installed in accordance with the *National Fuel Gas Code* (ANSI Z223.1, latest edition). A Canadian installation must be in accordance with the *Natural Gas and Propane Installation Code* (CSA B149, latest edition). This code is available from CSA Information Services, 1-800-463-6727. Local authorities having jurisdiction should be consulted before installation is made to verify local codes and installation procedure requirements.
- Installations in aircraft hangars should be in accordance with the *Standard for Aircraft Hangars* (ANSI/NFPA 409, latest edition). Installations in public garages should be in accordance with the *Standard for Parking Structures* (ANSI/NFPA 88A, latest edition). Installations in repair garages should be in accordance with the *Standard for Repair Garages* (NFPA 88B), which has been incorporated into the *Code for Motor Fuel Dispensing Facilities and Repair Garages* (NFPA 30A, latest edition). In Canada, installations in aircraft hangars and public garages should be in accordance with CSA B149.
- If the heater is being installed in the Commonwealth of Massachusetts, installation must be performed by a licensed plumber or licensed gas fitter.

## Heater Location

**⚠ CAUTION ⚠**

- **Unit heaters should not be used in an application where the heated space temperature is below 40°F (4°C). Operating under low ambient conditions may cause condensation to form in the heat exchanger.**
- **Do not locate the heater where it may be exposed to water spray, rain, or dripping water.**

For best results, the heater should be mounted with certain rules in mind:

- Units should always be arranged to blow toward or along exposed wall surfaces, if possible. Where two or more units are installed in the same room, a general scheme of air circulation should be maintained for best results.
- Suspended heaters are most effective when located as close to the working zone as possible, and this fact should be kept in mind when determining the mounting heights to be used. However, care should be exercised to avoid directing the discharged air directly on the room occupants.
- Partitions, columns, counters, or other obstructions should be taken into consideration when locating the unit heater so that a minimum quantity of airflow will be deflected by such obstacles.
- When units are located in the center of the space to be heated, the air should be discharged toward the exposed walls. In large areas, units should be located to discharge air along exposed walls with extra units provided to discharge air in toward the center of the area.

### *Clearances*

Units must be installed so that the clearances listed in **Table 1** are provided for with regards to combustion air space, inspection, and service and for proper spacing from combustible construction. Clearance to combustibles is defined as the minimum distance from the heater to a surface or object for which it is necessary to ensure that a surface temperature of 90°F (50°C) above the surrounding ambient temperature is not exceeded.

**Table 1. Clearances**

| Heater Surface | Unit Size (MBTUh) | |
|---|---|---|
| | 30–125 | 150–400 |
| | Minimum Clearance (Inches (mm)) | |
| Top | 1 (25) | 4 (102) |
| Flue connector | 6 (152) | |
| Access panel side | 18 (457) | |
| Non-access side | 1 (25) | 2 (51) |
| Bottom* | 1 (25) | |
| Rear** | 18 (457) | |
| Front | Refer to values for variable X (distance from heater to start of floor coverage) in **Heater Throw** section | |

*Suspend the heater so that the bottom is a minimum of 5 feet (1.5 meters) above the floor.

**Measure rear clearance from the fan or blower motor.

### *Heater Throw*

**Figure 1** shows throw patterns and **Table 2** and **Table 3** list throw distances for heaters suspended at varying mounting heights. The throw pattern changes with the addition of optional vertical louvers and/or downturn nozzles. Throw distances for units with downturn nozzles are listed in the downturn nozzle kit installation manual provided with the kit.

**H = the distance from the bottom of the heater to the floor**
**X = the distance from the heater to the start of floor coverage**
**Y = the distance from the heater to the end of floor coverage**
**Z = the distance at which air velocity drops below 50 feet (15.2 meters) per minute**

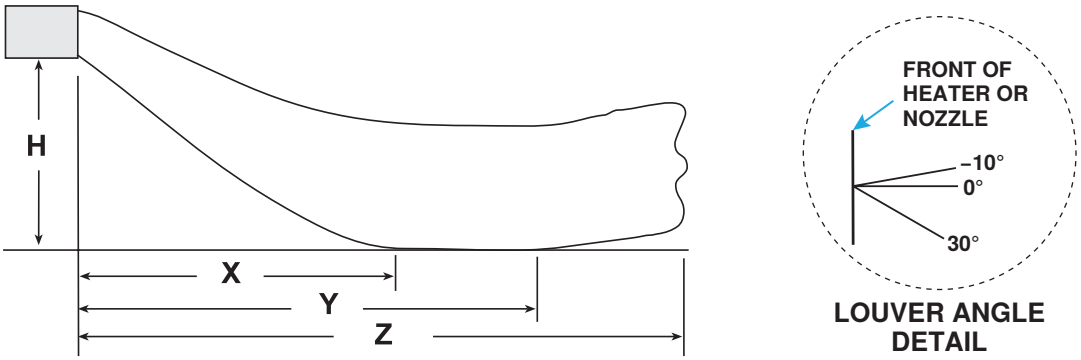


**Figure 1. Heater Throw Patterns (Refer to Table 2 and Table 3)**

**Table 2. Heater Throw with Standard Horizontal Louvers (Model UBXC)**

| Dimension H* (Feet (Meters)) | Louver Angle* and Dimension* | Low Speed | | | | | | 75°F (42°C) Rise |
|---|---|---|---|---|---|---|---|---|
| | | Unit Size (MBTUh) | | | | | | |
| | | 30 | 45 | 60 | 75 | 100 | 125 | 150 |
| | | Feet (Meters) | | | | | | |
| 5 (1.5) | **Angle** | **27°** | **20°** | **15°** | **13°** | **16°** | **14°** | **—** |
| | X | 7 (2.1) | 7 (2.1) | 11 (3.4) | 11 (3.4) | 10 (3.0) | 10 (3.0) | — |
| | Y | 15 (4.6) | 17 (5.2) | 26 (7.9) | 24 (7.3) | 23 (7.0) | 22 (6.7) | |
| | Z | 38 (11.6) | 44 (13.4) | 78 (23.8) | 74 (22.6) | 74 (22.6) | 69 (21.0) | |
| 8 (2.4) | **Angle** | **44°** | **34°** | **23°** | **23°** | **25°** | **24°** | **39** |
| | X | 7 (2.1) | 9 (2.7) | 14 (4.3) | 13 (4.0) | 13 (4.0) | 12 (3.7) | 9 (2.7) |
| | Y | 13 (4.0) | 17 (5.2) | 26 (7.9) | 26 (7.9) | 25 (7.6) | 24 (7.3) | 16 (4.9) |
| | Z | 32 (9.8) | 40 (12.2) | 76 (23.2) | 72 (21.9) | 72 (21.9) | 65 (19.8) | 44 (13.4) |
| 10 (3.0) | **Angle** | **56°** | **42°** | **29°** | **28°** | **31°** | **31°** | **48°** |
| | X | 7 (2.1) | 9 (2.7) | 15 (4.6) | 15 (4.6) | 14 (4.3) | 13 (4.0) | 9 (2.7) |
| | Y | 11 (3.4) | 16 (4.9) | 27 (8.2) | 25 (7.6) | 25 (7.6) | 24 (7.3) | 14 (4.3) |
| | Z | 25 (7.6) | 37 (11.3) | 72 (21.9) | 69 (21.0) | 69 (21.0) | 62 (18.9) | 38 (11.6) |
| 12 (3.7) | **Angle** | **—** | **52°** | **34°** | **34°** | **37°** | **37°** | **58°** |
| | X | — | 9 (2.7) | 16 (4.9) | 15 (4.6) | 14 (4.3) | 14 (4.3) | 7 (2.1) |
| | Y | | 14 (4.3) | 26 (7.9) | 25 (7.6) | 24 (7.3) | 23 (7.0) | 11 (3.4) |
| | Z | | 31 (9.4) | 70 (21.3) | 65 (19.8) | 66 (20.1) | 58 (17.7) | 30 (9.1) |
| 14 (4.3) | **Angle** | **—** | | **40°** | **40°** | **43°** | **43°** | **—** |
| | X | — | | 16 (4.9) | 15 (4.6) | 14 (4.3) | 14 (4.3) | — |
| | Y | | | 25 (7.6) | 24 (7.3) | 23 (7.0) | 21 (6.4) | |
| | Z | | | 65 (19.8) | 62 (18.9) | 62 (18.9) | 54 (16.5) | |
| 16 (4.9) | **Angle** | **—** | | **46°** | **46°** | **49°** | **51°** | **—** |
| | X | — | | 15 (4.6) | 15 (4.6) | 14 (4.3) | 12 (3.7) | — |
| | Y | | | 24 (7.3) | 23 (7.0) | 21 (6.4) | 19 (5.8) | |
| | Z | | | 60 (18.3) | 56 (17.1) | 57 (17.4) | 47 (14.3) | |
| 18 (5.5) | **Angle** | **—** | | **52°** | **52°** | **56°** | **57°** | **—** |
| | X | — | | 14 (4.3) | 14 (4.3) | 12 (3.7) | 11 (3.4) | — |
| | Y | | | 22 (6.7) | 21 (6.4) | 18 (5.5) | 17 (5.2) | |
| | Z | | | 53 (16.2) | 50 (15.2) | 51 (15.5) | 40 (12.2) | |

*See Figure 1.

## Heater Location—Continued

### *Heater Throw—Continued*

**Table 2. Heater Throw with Standard Horizontal Louvers (Model UBXC)—Continued**

| Dimension H* (Feet (Meters)) | Louver Angle* and Dimension* | Medium Speed | | | | | | 60°F (33°C) Rise |
|---|---|---|---|---|---|---|---|---|
| | | Unit Size (MBTUh) | | | | | | |
| | | 30 | 45 | 60 | 75 | 100 | 125 | 150 |
| | | Feet (Meters) | | | | | | |
| 5 (1.5) | **Angle** | **24°** | **15°** | **13°** | **11°** | **13°** | **10°** | **—** |
| | X | 7 (2.1) | 9 (2.7) | 12 (3.7) | 11 (3.4) | 11 (3.4) | 12 (3.7) | — |
| | Y | 16 (4.9) | 21 (6.4) | 28 (8.5) | 27 (8.2) | 27 (8.2) | 29 (8.8) | |
| | Z | 43 (13.1) | 60 (18.3) | 91 (27.7) | 84 (25.6) | 86 (26.2) | 96 (29.3) | |
| 8 (2.4) | **Angle** | **38°** | **26°** | **21°** | **19°** | **21°** | **18°** | **28°** |
| | X | 9 (2.7) | 11 (3.4) | 16 (4.9) | 15 (4.6) | 15 (4.6) | 16 (4.9) | 13 (4.0) |
| | Y | 16 (4.9) | 23 (7.0) | 30 (9.1) | 29 (8.8) | 28 (8.5) | 31 (9.4) | 24 (7.3) |
| | Z | 38 (11.6) | 57 (17.4) | 89 (27.1) | 82 (25.0) | 83 (25.3) | 94 (28.7) | 74 (22.6) |
| 10 (3.0) | **Angle** | **48°** | **32°** | **26°** | **25°** | **26°** | **23°** | **35°** |
| | X | 8 (2.4) | 13 (4.0) | 17 (5.2) | 16 (4.9) | 17 (5.2) | 18 (5.5) | 13 (4.0) |
| | Y | 14 (4.3) | 22 (6.7) | 30 (9.1) | 30 (9.1) | 29 (8.8) | 32 (9.8) | 22 (6.7) |
| | Z | 33 (10.1) | 54 (16.5) | 86 (26.2) | 79 (24.1) | 81 (24.7) | 92 (28.0) | 62 (18.9) |
| 12 (3.7) | **Angle** | **56°** | **39°** | **31°** | **30°** | **32°** | **27°** | **42°** |
| | X | 8 (2.4) | 13 (4.0) | 18 (5.5) | 17 (5.2) | 17 (5.2) | 19 (5.8) | 13 (4.0) |
| | Y | 12 (3.7) | 21 (6.4) | 31 (9.4) | 30 (9.1) | 29 (8.8) | 32 (9.8) | 21 (6.4) |
| | Z | 28 (8.5) | 51 (15.5) | 83 (25.3) | 77 (23.5) | 78 (23.8) | 89 (27.1) | 57 (17.4) |
| 14 (4.3) | **Angle** | **—** | **46°** | **36°** | **34°** | **37°** | **32°** | **49°** |
| | X | — | 12 (3.7) | 18 (5.5) | 18 (5.5) | 18 (5.5) | 20 (6.1) | 12 (3.7) |
| | Y | | 20 (6.1) | 30 (9.1) | 29 (8.8) | 29 (8.8) | 32 (9.8) | 19 (5.8) |
| | Z | | 46 (14.0) | 79 (24.1) | 74 (22.6) | 74 (22.6) | 87 (26.5) | 51 (15.5) |
| 16 (4.9) | **Angle** | **—** | **53°** | **41°** | **39°** | **42°** | **36°** | **57°** |
| | X | — | 11 (3.4) | 19 (5.8) | 18 (5.5) | 18 (5.5) | 20 (6.1) | 11 (3.4) |
| | Y | | 17 (5.2) | 29 (8.8) | 28 (8.5) | 27 (8.2) | 31 (9.4) | 16 (4.9) |
| | Z | | 40 (12.2) | 75 (22.9) | 70 (21.3) | 70 (21.3) | 83 (25.3) | 43 (13.1) |
| 18 (5.5) | **Angle** | **—** | | **46°** | **44°** | **47°** | **40°** | **—** |
| | X | — | | 17 (5.2) | 18 (5.5) | 17 (5.2) | 20 (6.1) | — |
| | Y | | | 28 (8.5) | 26 (7.9) | 26 (7.9) | 30 (9.1) | |
| | Z | | | 69 (21.0) | 65 (19.8) | 64 (19.5) | 78 (23.8) | |
| **Dimension H* (Feet (Meters))** | **Louver Angle* and Dimension*** | **High Speed** | | | | | | **45°F (25°C) Rise** |
| | | **Unit Size (MBTUh)** | | | | | | |
| | | **30** | **45** | **60** | **75** | **100** | **125** | **150** |
| | | **Feet (Meters)** | | | | | | |
| 5 (1.5) | **Angle** | **20°** | **11°** | **11°** | **9°** | **10°** | **7°** | **—** |
| | X | 8 (2.4) | 11 (3.4) | 13 (4.0) | 12 (3.7) | 13 (4.0) | 13 (4.0) | — |
| | Y | 19 (5.8) | 28 (8.5) | 30 (9.1) | 30 (9.1) | 32 (9.8) | 33 (10.1) | |
| | Z | 51 (15.5) | 81 (24.7) | 105 (32.0) | 97 (29.6) | 110 (33.5) | 113 (34.4) | |
| 8 (2.4) | **Angle** | **31°** | **19°** | **19°** | **16°** | **17°** | **13°** | **19°** |
| | X | 10 (3.0) | 15 (4.6) | 17 (5.2) | 17 (5.2) | 18 (5.5) | 19 (5.8) | 18 (5.5) |
| | Y | 19 (5.8) | 29 (8.8) | 33 (10.1) | 33 (10.1) | 34 (10.4) | 36 (11.0) | 32 (9.8) |
| | Z | 48 (14.6) | 79 (24.1) | 103 (31.4) | 95 (29.0) | 108 (32.9) | 111 (33.8) | 107 (32.6) |
| 10 (3.0) | **Angle** | **39°** | **24°** | **23°** | **20°** | **21°** | **17°** | **24°** |
| | X | 11 (3.4) | 16 (4.9) | 19 (5.8) | 19 (5.8) | 20 (6.1) | 21 (6.4) | 19 (5.8) |
| | Y | 19 (5.8) | 30 (9.1) | 34 (10.4) | 33 (10.1) | 36 (11.0) | 37 (11.3) | 34 (10.4) |
| | Z | 44 (13.4) | 78 (23.8) | 100 (30.5) | 94 (28.7) | 106 (32.3) | 109 (33.2) | 104 (31.7) |

*See **Figure 1**.

## Table 2. Heater Throw with Standard Horizontal Louvers (Model UBXC)—Continued

| Dimension H* (Feet (Meters)) | Louver Angle* and Dimension* | High Speed | | | | | | 45°F (25°C) Rise |
|---|---|---|---|---|---|---|---|---|
| | | Unit Size (MBTUh) | | | | | | |
| | | 30 | 45 | 60 | 75 | 100 | 125 | 150 |
| | | Feet (Meters) | | | | | | |
| 12 (3.7) | **Angle** | **46°** | **29°** | **27°** | **25°** | **25°** | **21°** | **28°** |
| | X | 11 (3.4) | 17 (5.2) | 21 (6.4) | 20 (6.1) | 22 (6.7) | 23 (7.0) | 21 (6.4) |
| | Y | 17 (5.2) | 30 (9.1) | 35 (10.7) | 34 (10.4) | 36 (11.0) | 39 (11.9) | 34 (10.4) |
| | Z | 40 (12.2) | 75 (22.9) | 98 (29.9) | 92 (28.0) | 104 (31.7) | 107 (32.6) | 102 (31.1) |
| 14 (4.3) | **Angle** | **56°** | **34°** | **31°** | **29°** | **29°** | **25°** | **32°** |
| | X | 9 (2.7) | 18 (5.5) | 22 (6.7) | 21 (6.4) | 23 (7.0) | 24 (7.3) | 22 (6.7) |
| | Y | 15 (4.6) | 30 (9.1) | 34 (10.4) | 34 (10.4) | 36 (11.0) | 39 (11.9) | 34 (10.4) |
| | Z | 33 (10.1) | 72 (21.9) | 95 (29.0) | 89 (27.1) | 102 (31.1) | 105 (32.0) | 98 (29.9) |
| 16 (4.9) | **Angle** | **—** | **39°** | **35°** | **33°** | **33°** | **29°** | **36°** |
| | X | — | 19 (5.8) | 23 (7.0) | 22 (6.7) | 24 (7.3) | 25 (7.6) | 22 (6.7) |
| | Y | | 29 (8.8) | 33 (10.1) | 33 (10.1) | 36 (11.0) | 40 (12.2) | 33 (10.1) |
| | Z | | 69 (21.0) | 91 (27.7) | 86 (26.2) | 99 (30.2) | 103 (31.4) | 94 (28.7) |
| 18 (5.5) | **Angle** | **—** | **44°** | **40°** | **37°** | **37°** | **32°** | **41°** |
| | X | — | 18 (5.5) | 21 (6.4) | 22 (6.7) | 23 (7.0) | 26 (7.9) | 21 (6.4) |
| | Y | | 28 (8.5) | 33 (10.1) | 33 (10.1) | 36 (11.0) | 39 (11.9) | 33 (10.1) |
| | Z | | 64 (19.5) | 86 (26.2) | 83 (25.3) | 95 (29.0) | 101 (30.8) | 89 (27.1) |

| Dimension H* (Feet (Meters)) | Louver Angle* and Dimension* | 75°F (42°C) Rise | | | | | | 80°F (44°C) Rise |
|---|---|---|---|---|---|---|---|---|
| | | Unit Size (MBTUh) | | | | | | |
| | | 175 | 200 | 225 | 250 | 300 | 350 | 400 |
| | | Feet (Meters) | | | | | | |
| 8 (2.4) | **Angle** | **30°** | **27°** | **29°** | **26°** | **32°** | **27°** | **24°** |
| | X | 12 (3.7) | 13 (4.0) | 13 (4.0) | 14 (4.3) | 12 (3.7) | 13 (4.0) | 15 (4.6) |
| | Y | 22 (6.7) | 24 (7.3) | 24 (7.3) | 27 (8.2) | 21 (6.4) | 25 (7.6) | 28 (8.5) |
| | Z | 69 (21.0) | 76 (23.2) | 82 (25.0) | 95 (29.0) | 70 (21.3) | 82 (25.0) | 95 (29.0) |
| 10 (3.0) | **Angle** | **37°** | **33°** | **38°** | **31°** | **39°** | **33°** | **29°** |
| | X | 12 (3.7) | 14 (4.3) | 12 (3.7) | 16 (4.9) | 12 (3.7) | 14 (4.3) | 16 (4.9) |
| | Y | 22 (6.7) | 24 (7.3) | 21 (6.4) | 27 (8.2) | 21 (6.4) | 25 (7.6) | 28 (8.5) |
| | Z | 65 (19.8) | 72 (21.9) | 66 (20.1) | 91 (27.7) | 65 (19.8) | 77 (23.5) | 92 (28.0) |
| 12 (3.7) | **Angle** | **43°** | **39°** | **45°** | **37°** | **47°** | **40°** | **34°** |
| | X | 13 (4.0) | 14 (4.3) | 12 (3.7) | 16 (4.9) | 12 (3.7) | 14 (4.3) | 17 (5.2) |
| | Y | 21 (6.4) | 23 (7.0) | 20 (6.1) | 27 (8.2) | 19 (5.8) | 24 (7.3) | 28 (8.5) |
| | Z | 59 (18.0) | 68 (20.7) | 60 (18.3) | 86 (26.2) | 58 (17.7) | 72 (21.9) | 88 (26.8) |
| 14 (4.3) | **Angle** | **51°** | **46°** | **52°** | **43°** | **55°** | **46°** | **39°** |
| | X | 11 (3.4) | 14 (4.3) | 11 (3.4) | 16 (4.9) | 10 (3.0) | 14 (4.3) | 17 (5.2) |
| | Y | 19 (5.8) | 22 (6.7) | 18 (5.5) | 25 (7.6) | 17 (5.2) | 22 (6.7) | 27 (8.2) |
| | Z | 52 (15.8) | 62 (18.9) | 53 (16.2) | 80 (24.4) | 50 (15.2) | 66 (20.1) | 82 (25.0) |
| 16 (4.9) | **Angle** | **—** | **53°** | | **49°** | **—** | **53°** | **45°** |
| | X | — | 12 (3.7) | — | 16 (4.9) | — | 13 (4.0) | 17 (5.2) |
| | Y | | 20 (6.1) | | 23 (7.0) | | 20 (6.1) | 26 (7.9) |
| | Z | | 53 (16.2) | | 73 (22.3) | | 57 (17.4) | 76 (23.2) |
| 18 (5.5) | **Angle** | **—** | | | **56°** | **—** | | **50°** |
| | X | — | | | 14 (4.3) | — | | 16 (4.9) |
| | Y | | | | 21 (6.4) | | | 24 (7.3) |
| | Z | | | | 64 (19.5) | | | 69 (21.0) |

*See **Figure 1**.

## Heater Location—Continued

### *Heater Throw—Continued*

**Table 2. Heater Throw with Standard Horizontal Louvers (Model UBXC)—Continued**

| Dimension H* (Feet (Meters)) | Louver Angle* and Dimension* | 60°F (33°C) Rise | | | | | | 70°F (39°C) Rise |
|---|---|---|---|---|---|---|---|---|
| | | Unit Size (MBTUh) | | | | | | |
| | | 175 | 200 | 225 | 250 | 300 | 350 | 400 |
| | | Feet (Meters) | | | | | | |
| 8 (2.4) | Angle | 22° | 21° | 24° | 20° | 24° | 20° | 21° |
| | X | 15 (4.6) | 16 (4.9) | 16 (4.9) | 19 (5.8) | 16 (4.9) | 18 (5.5) | 17 (5.2) |
| | Y | 29 (8.8) | 31 (9.4) | 29 (8.8) | 34 (10.4) | 28 (8.5) | 33 (10.1) | 31 (9.4) |
| | Z | 92 (28.0) | 100 (30.5) | 100 (30.5) | 127 (38.7) | 100 (30.5) | 119 (36.3) | 111 (33.8) |
| 10 (3.0) | Angle | 28° | 25° | 29° | 24° | 29° | 25° | 26° |
| | X | 16 (4.9) | 18 (5.5) | 16 (4.9) | 20 (6.1) | 17 (5.2) | 19 (5.8) | 18 (5.5) |
| | Y | 29 (8.8) | 31 (9.4) | 30 (9.1) | 35 (10.7) | 29 (8.8) | 34 (10.4) | 32 (9.8) |
| | Z | 89 (27.1) | 97 (29.6) | 96 (29.3) | 123 (37.5) | 96 (29.3) | 116 (35.4) | 107 (32.6) |
| 12 (3.7) | Angle | 33° | 30° | 34° | 28° | 34° | 29° | 31° |
| | X | 17 (5.2) | 19 (5.8) | 17 (5.2) | 21 (6.4) | 18 (5.5) | 21 (6.4) | 19 (5.8) |
| | Y | 29 (8.8) | 31 (9.4) | 30 (9.1) | 36 (11.0) | 29 (8.8) | 34 (10.4) | 32 (9.8) |
| | Z | 85 (25.9) | 93 (28.3) | 92 (28.0) | 120 (36.6) | 92 (28.0) | 113 (34.4) | 103 (31.4) |
| 14 (4.3) | Angle | 38° | 34° | 38° | 32° | 39° | 33° | 35° |
| | X | 17 (5.2) | 20 (6.1) | 18 (5.5) | 22 (6.7) | 18 (5.5) | 22 (6.7) | 20 (6.1) |
| | Y | 28 (8.5) | 30 (9.1) | 28 (8.5) | 35 (10.7) | 28 (8.5) | 34 (10.4) | 31 (9.4) |
| | Z | 80 (24.4) | 89 (27.1) | 87 (26.5) | 116 (35.4) | 87 (26.5) | 109 (33.2) | 99 (30.2) |
| 16 (4.9) | Angle | 43° | 39° | 44° | 37° | 44° | 37° | 40° |
| | X | 17 (5.2) | 20 (6.1) | 18 (5.5) | 23 (7.0) | 18 (5.5) | 22 (6.7) | 20 (6.1) |
| | Y | 27 (8.2) | 29 (8.8) | 27 (8.2) | 35 (10.7) | 27 (8.2) | 33 (10.1) | 31 (9.4) |
| | Z | 75 (22.9) | 84 (25.6) | 80 (24.4) | 111 (33.8) | 81 (24.7) | 104 (31.7) | 93 (28.3) |
| 18 (5.5) | Angle | 48° | 44° | 49° | 41° | 50° | 41° | 44° |
| | X | 17 (5.2) | 19 (5.8) | 17 (5.2) | 23 (7.0) | 17 (5.2) | 22 (6.7) | 20 (6.1) |
| | Y | 25 (7.6) | 29 (8.8) | 26 (7.9) | 34 (10.4) | 25 (7.6) | 32 (9.8) | 29 (8.8) |
| | Z | 69 (21.0) | 79 (24.1) | 74 (22.6) | 106 (32.3) | 73 (22.3) | 98 (29.9) | 88 (26.8) |
| Dimension H* (Feet (Meters)) | Louver Angle* and Dimension* | 45°F (25°C) Rise | | | | | | 50°F (28°C) Rise |
| | | Unit Size (MBTUh) | | | | | | |
| | | 175 | 200 | 225 | 250 | 300 | 350 | 400 |
| | | Feet (Meters) | | | | | | |
| 8 (2.4) | Angle | 15° | 13° | 16° | 14° | 17° | 14° | 14° |
| | X | 22 (6.7) | 23 (7.0) | 23 (7.0) | 26 (7.9) | 21 (6.4) | 24 (7.3) | 24 (7.3) |
| | Y | 41 (12.5) | 43 (13.1) | 43 (13.1) | 48 (14.6) | 39 (11.9) | 45 (13.7) | 44 (13.4) |
| | Z | 146 (44.5) | 157 (47.9) | 168 (51.2) | 198 (60.4) | 146 (44.5) | 169 (51.5) | 169 (51.5) |
| 10 (3.0) | Angle | 19° | 17° | 19° | 17° | 21° | 18° | 17° |
| | X | 24 (7.3) | 25 (7.6) | 26 (7.9) | 29 (8.8) | 23 (7.0) | 26 (7.9) | 26 (7.9) |
| | Y | 43 (13.1) | 46 (14.0) | 45 (13.7) | 50 (15.2) | 41 (12.5) | 47 (14.3) | 46 (14.0) |
| | Z | 144 (43.9) | 155 (47.2) | 166 (50.6) | 196 (59.7) | 143 (43.6) | 167 (50.9) | 167 (50.9) |
| 12 (3.7) | Angle | 22° | 20° | 22° | 20° | 25° | 21° | 20° |
| | X | 26 (7.9) | 27 (8.2) | 28 (8.5) | 31 (9.4) | 25 (7.6) | 28 (8.5) | 28 (8.5) |
| | Y | 43 (13.1) | 47 (14.3) | 45 (13.7) | 52 (15.8) | 42 (12.8) | 48 (14.6) | 48 (14.6) |
| | Z | 141 (43.0) | 152 (46.3) | 163 (49.7) | 194 (59.1) | 140 (42.7) | 165 (50.3) | 165 (50.3) |
| 14 (4.3) | Angle | 25° | 23° | 25° | 22° | 28° | 24° | 23° |
| | X | 28 (8.5) | 29 (8.8) | 30 (9.1) | 32 (9.8) | 26 (7.9) | 30 (9.1) | 31 (9.4) |
| | Y | 44 (13.4) | 48 (14.6) | 46 (14.0) | 54 (16.5) | 42 (12.8) | 49 (14.9) | 48 (14.6) |
| | Z | 137 (41.8) | 150 (45.7) | 160 (48.8) | 191 (58.2) | 137 (41.8) | 162 (49.4) | 162 (49.4) |

*See **Figure 1**.

| Table 2. Heater Throw with Standard Horizontal Louvers (Model UBXC)—Continued | | | | | | | | |
|---|---|---|---|---|---|---|---|---|
| H* (Feet (Meters)) | Distance* or Angle | 45°F (25°C) Rise | | | | | | 50°F (28°C) Rise |
| | | Unit Size (MBTUh) | | | | | | |
| | | 175 | 200 | 225 | 250 | 300 | 350 | 400 |
| | | Feet (Meters) | | | | | | |
| 16 (4.9) | **Angle** | **28°** | **26°** | **29°** | **25°** | **31°** | **26°** | **26°** |
| | X | 29 (8.8) | 31 (9.4) | 31 (9.4) | 34 (10.4) | 27 (8.2) | 32 (9.8) | 32 (9.8) |
| | Y | 44 (13.4) | 48 (14.6) | 47 (14.3) | 53 (16.2) | 42 (12.8) | 48 (14.6) | 49 (14.9) |
| | Z | 134 (40.8) | 147 (44.8) | 157 (47.9) | 189 (57.6) | 133 (40.5) | 159 (48.5) | 159 (48.5) |
| 18 (5.5) | **Angle** | **32°** | **29°** | **32°** | **28°** | **34°** | **29°** | **29°** |
| | X | 29 (8.8) | 31 (9.4) | 31 (9.4) | 34 (10.4) | 28 (8.5) | 33 (10.1) | 32 (9.8) |
| | Y | 44 (13.4) | 49 (14.9) | 47 (14.3) | 54 (16.5) | 41 (12.5) | 49 (14.9) | 49 (14.9) |
| | Z | 131 (39.9) | 144 (43.9) | 153 (46.6) | 185 (56.4) | 129 (39.3) | 156 (47.5) | 156 (47.5) |

*See **Figure 1**.

| Table 3. Heater Throw with Standard Horizontal Louvers (Model UDXC) | | | | | | | | |
|---|---|---|---|---|---|---|---|---|
| Dimension H* (Feet (Meters)) | Louver Angle* and Dimension* | Unit Size (MBTUh) | | | | | | |
| | | 30 | 45 | 60 | 75 | 100 | 125 | 150 |
| | | Feet (Meters) | | | | | | |
| 5 (1.5) | **Angle** | **21°** | **20°** | **16°** | **14°** | **18°** | **14°** | — |
| | X | 6 (1.8) | 7 (2.1) | 8 (2.4) | 9 (2.7) | 9 (2.7) | 10 (3.0) | |
| | Y | 14 (4.3) | 16 (4.9) | 18 (5.5) | 20 (6.1) | 20 (6.1) | 22 (6.7) | |
| | Z | 30 (9.1) | 40 (12.2) | 45 (13.8) | 57 (17.4) | 59 (18.0) | 65 (19.9) | |
| 8 (2.4) | **Angle** | **39°** | **34°** | **29°** | **25°** | **28°** | **24°** | **26°** |
| | X | 7 (2.1) | 9 (2.7) | 10 (3.0) | 12 (3.7) | 11 (3.4) | 12 (3.7) | 13 (4.0) |
| | Y | 13 (4.0) | 16 (4.9) | 18 (5.5) | 22 (6.7) | 21 (6.4) | 23 (7.0) | 24 (7.3) |
| | Z | 26 (7.9) | 37 (11.3) | 42 (12.8) | 54 (16.5) | 56 (17.1) | 63 (19.2) | 73 (22.3) |
| 10 (3.0) | **Angle** | **52°** | **43°** | **37°** | **32°** | **36°** | **30°** | **32°** |
| | X | 6 (1.8) | 9 (2.7) | 10 (3.0) | 12 (3.7) | 12 (3.7) | 13 (4.0) | 14 (4.3) |
| | Y | 11 (3.4) | 15 (4.6) | 17 (5.2) | 22 (6.7) | 20 (6.1) | 24 (7.3) | 24 (7.3) |
| | Z | 22 (6.7) | 33 (10.0) | 39 (11.9) | 52 (15.8) | 52 (15.8) | 60 (18.3) | 69 (21.0) |
| 12 (3.7) | **Angle** | **—** | **55°** | **46°** | **39°** | **44°** | **36°** | **39°** |
| | X | — | 8 (2.4) | 10 (3.0) | 12 (3.7) | 11 (3.4) | 14 (4.3) | 14 (4.3) |
| | Y | | 12 (3.7) | 16 (4.9) | 21 (6.4) | 19 (5.8) | 23 (7.0) | 24 (7.3) |
| | Z | | 27 (8.2) | 34 (10.4) | 48 (14.6) | 47 (14.3) | 57 (17.4) | 64 (19.5) |
| 14 (4.3) | **Angle** | **—** | | **56°** | **46°** | **51°** | **43°** | **45°** |
| | X | — | | 9 (2.7) | 12 (3.7) | 11 (3.4) | 14 (4.3) | 14 (4.3) |
| | Y | | | 14 (4.3) | 19 (5.8) | 17 (5.2) | 22 (6.7) | 22 (6.7) |
| | Z | | | 29 (8.8) | 44 (13.4) | 42 (12.8) | 53 (16.1) | 59 (18.0) |
| 16 (4.9) | **Angle** | **—** | | | **54°** | **58°** | **50°** | **51°** |
| | X | — | | | 11 (3.4) | 10 (3.0) | 13 (4.0) | 13 (4.0) |
| | Y | | | | 17 (5.2) | 14 (4.3) | 20 (6.1) | 20 (6.1) |
| | Z | | | | 38 (11.6) | 34 (10.4) | 47 (14.3) | 53 (16.2) |
| 18 (5.5) | **Angle** | **—** | | | | | **57°** | **58°** |
| | X | — | | | | | 11 (3.4) | 11 (3.4) |
| | Y | | | | | | 17 (5.2) | 17 (5.2) |
| | Z | | | | | | 40 (12.2) | 44 (13.4) |

*See **Figure 1**.

## Heater Location—Continued

### *Heater Throw—Continued*

**Table 3. Heater Throw with Standard Horizontal Louvers (Model UDXC)—Continued**

| Dimension H* (Feet (Meters)) | Louver Angle* and Dimension* | Unit Size (MBTUh) | | | | | | |
|---|---|---|---|---|---|---|---|---|
| | | 175 | 200 | 225 | 250 | 300 | 350 | 400 |
| | | Feet (Meters) | | | | | | |
| 8 (2.4) | **Angle** | **22°** | **20°** | **24°** | **21°** | **24°** | **20°** | **17°** |
| | X | 15 (4.6) | 16 (4.9) | 14 (4.3) | 16 (4.9) | 15 (4.6) | 17 (5.2) | 18 (5.5) |
| | Y | 28 (8.5) | 30 (9.1) | 27 (8.2) | 29 (8.8) | 28 (8.5) | 31 (9.4) | 34 (11.3) |
| | Z | 90 (27.4) | 93 (28.0) | 86 (26.2) | 93 28.3 | 94 (28.7) | 105 (32.0) | 113 (34.4) |
| 10 (3.0) | **Angle** | **27°** | **25°** | **30°** | **26°** | **29°** | **25°** | **21°** |
| | X | 17 (5.2) | 17 (5.2) | 15 (4.6) | 17 (5.2) | 16 (4.9) | 18 (5.5) | 20 (6.1) |
| | Y | 29 (8.8) | 31 (9.4) | 27 (8.2) | 30 (9.1) | 28 (8.5) | 32 (9.8) | 35 (10.7) |
| | Z | 87 (26.6) | 91 (27.7) | 82 (25.0) | 90 27.4 | 89 (27.1) | 103 (31.4) | 110 (33.5) |
| 12 (3.7) | **Angle** | **32°** | **30°** | **35°** | **31°** | **34°** | **30°** | **25°** |
| | X | 18 (5.5) | 18 (5.5) | 16 (4.9) | 18 (5.5) | 17 (5.2) | 19 (5.8) | 21 (6.4) |
| | Y | 29 (8.8) | 31 (9.4) | 27 (8.2) | 30 (9.1) | 28 (8.5) | 32 (9.8) | 36 (11.0) |
| | Z | 84 (25.6) | 88 (26.8) | 78 (23.8) | 87 26.5 | 85 (25.9) | 98 (29.9) | 108 (32.9) |
| 14 (4.3) | **Angle** | **37°** | **34°** | **41°** | **36°** | **40°** | **34°** | **29°** |
| | X | 18 (5.5) | 19 (5.8) | 16 (4.9) | 18 (5.5) | 17 (5.2) | 20 (6.1) | 23 (7.0) |
| | Y | 28 (8.5) | 30 (9.1) | 26 (7.9) | 30 (9.1) | 27 (8.2) | 32 (9.8) | 35 (10.7) |
| | Z | 79 (24.1) | 84 (25.6) | 73 (22.3) | 83 25.3 | 80 (24.4) | 95 (29.0) | 105 (32.0) |
| 16 (4.9) | **Angle** | **42°** | **39°** | **47°** | **41°** | **45°** | **38°** | **33°** |
| | X | 18 (5.5) | 19 (5.8) | 16 (4.9) | 19 (5.8) | 17 (5.2) | 21 (6.4) | 23 (7.0) |
| | Y | 27 (8.2) | 29 (8.8) | 24 (7.3) | 28 (8.5) | 25 (7.6) | 31 (9.4) | 35 (10.7) |
| | Z | 74 (22.6) | 79 (24.1) | 67 (20.4) | 78 23.8 | 74 (22.6) | 90 (27.4) | 101 (30.8) |
| 18 (5.5) | **Angle** | **48°** | **44°** | **53°** | **46°** | **51°** | **43°** | **37°** |
| | X | 17 (5.2) | 19 (5.8) | 14 (4.3) | 18 (5.5) | 16 (4.9) | 20 (6.1) | 23 (7.0) |
| | Y | 26 (7.9) | 28 (8.5) | 22 (6.7) | 27 (8.2) | 24 (7.3) | 30 (9.1) | 35 (10.7) |
| | Z | 68 (20.7) | 74 (22.6) | 60 (18.3) | 72 (21.9) | 66 (20.1) | 85 (25.9) | 97 (26.9) |

*See **Figure 1**.

### *Mounting Height Requirements*

**⚠ WARNING ⚠**

**If touched, the vent pipe and internal heater surfaces that are accessible from outside the heater will cause burns. Suspend the heater a minimum of 5 feet (1.5 meters) above the floor.**

In general, a unit should be located 8 to 12 feet (2.4 to 3.7 meters) above the floor. At those points where infiltration of cold air is excessive, such as at entrance doors and shipping doors, it is desirable to locate the unit so that it will discharge directly toward the source of cold air from a distance of 15 to 20 feet (4.6 to 6.1 meters).

### *Halogenated Hydrocarbons*

Halogenated hydrocarbons are a family of chemical compounds characterized by the presence of halogen elements (fluorine, chlorine, bromine, etc.). These compounds are used in refrigerants, cleaning agents, and solvents and are heavier than air, a fact that should be kept in mind when determining the installation location of heaters and building exhaust systems.

**⚠ CAUTION ⚠**

**CORROSION HAZARD: Halogenated hydrocarbons, when exposed to flame, precipitate with any condensation present in the heater to form hydrochloric acid, which readily attacks all metals, including 300 grade stainless steel. Care should be taken to separate these vapors from the combustion process. An outside air supply MUST BE provided to the burner whenever the presence of these compounds is suspected.**

## Dimensions

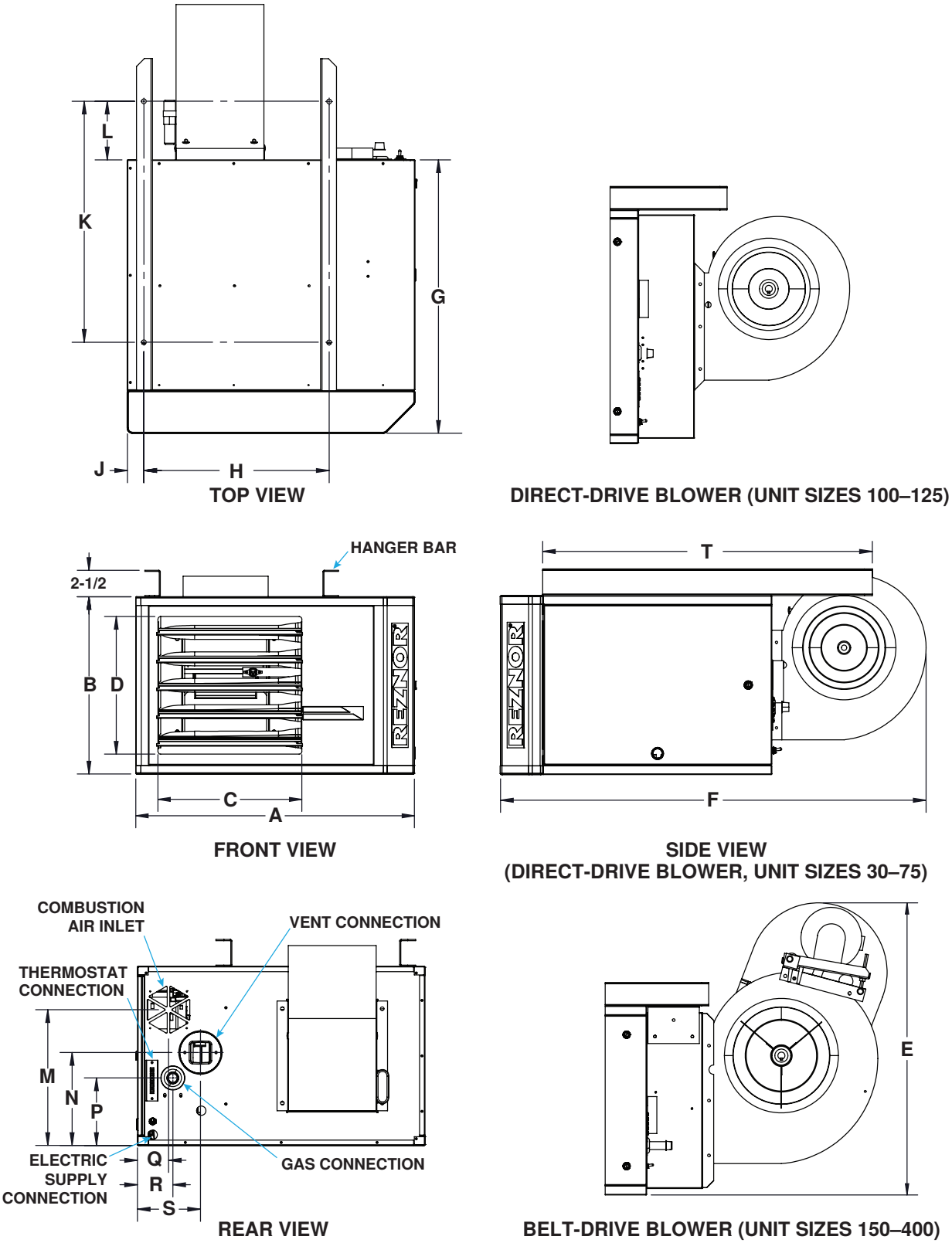


**Figure 2. Dimensions—Model UBXC (Refer to Table 4)**

## Dimensions—Continued

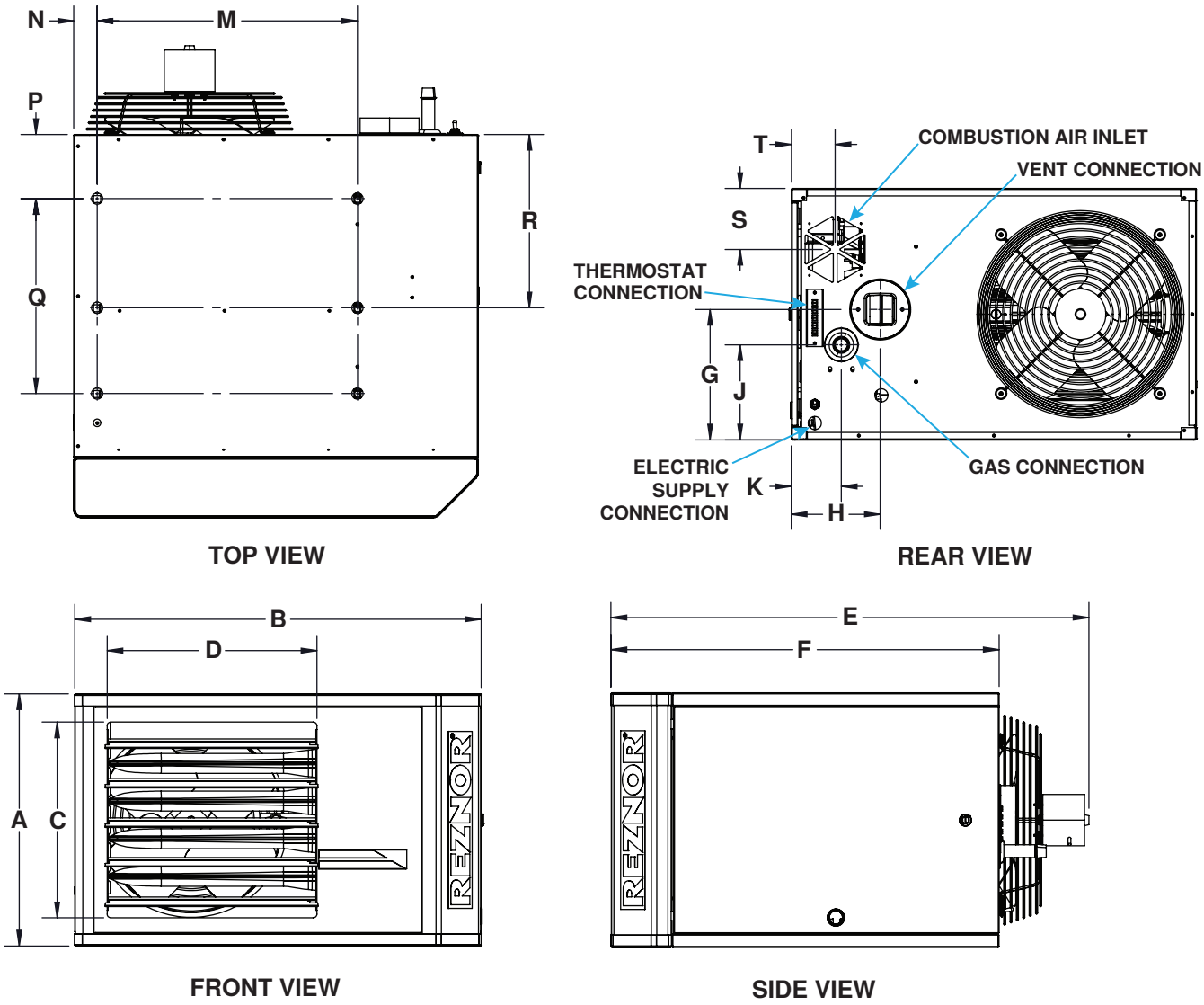


**Figure 3. Dimensions—Model UDXC (Refer to Table 4)**

## Table 4. Dimensions

| Dimension (See Figure 2 or Figure 3) | Model | Unit Size (MBTUh) | | | | | | | | |
|---|---|---|---|---|---|---|---|---|---|---|
| | | 30, 45 | 60 | 75 | 100 | 125 | 150, 175 | 200 | 225, 250 | 300, 350, 400 |
| | | Inches (mm) | | | | | | | | |
| A | UBXC | 27 (686) | | | | | 38-3/16 (970) | | | 41 (1041) |
| | UDXC | 13-3/4 (349) | 16-3/4 (425) | | 24-3/4 (629) | | 20-1/8 (511) | | 26-1/8 (664) | 34-1/8 (867) |
| B | UBXC | 13-3/4 (349) | 16-3/4 (425) | | 24-3/4 (629) | | 20-1/8 (511) | | 26-1/8 (664) | 34-1/8 (867) |
| | UDXC | 27 (686) | | | | | 38-3/16 (970) | | | 41 (1041) |
| C | UBXC | 13-13/16 (351) | | | | | 23 (584) | | | |
| | UDXC | 10 (254) | 13 (330) | | 21 (533) | | 16 (406) | | 22 (559) | 30 (762) |
| D | UBXC | 10 (254) | 13 (330) | | 21 (533) | | 16 (406) | | 22 (559) | 30 (762) |
| | UDXC | 13-13/16 (351) | | | | | 23 (584) | | | |
| E | UBXC | 17-3/16 (437)* | 18-11/16 (475)* | | 24-1/16 (611)* | | 30-31/32 (786)* | | 37-1/32 (941)* | 41-7/32 (1047)* |
| | UDXC | 29-3/4 (756) | 32-23/32 (831) | 31-29/32 (810) | 34-9/32 (871) | 34-9/32 (871) | 48-7/16 (1230) | | | 48-29/32 (1243) |
| F | UBXC | 40-3/32 (1018) | | | 48-1/8 (1222) | 47-5/8 (1210) | 64-3/4 (1645) | | 68-1/8 1730) | |
| | UDXC | 25-9/16 (649) | | | | | 40 (1016) | | | |
| G | UBXC | 25-17/32 (649) | | | | | 40 (1016) | | | |
| | UDXC | 6 (152) | 8-11/16 (221) | | 15-5/16 (389) | | 9-5/8 (244) | | 13-1/16 (332) | 17-1/16 (433) |
| H | UBXC | 17-3/8 (441)** | | | | | 25-11/16 (653)** | | | 27-11/16 (703)** |
| | UDXC | 5-15/16 (151) | | | | | 8-5/16 (211) | | | 8-1/2 (216) |
| J | UBXC | 1-9/16 (40) | | | | | 1-13/32 (36) | | | |
| | UDXC | 3-1/2 (89) | 6 (152) | | 8-29/32 (226) | | 5-3/8 (137) | | 9 (229) | 11-13/16 (300) |
| K | UBXC | 22-1/2 (572)** | | | | | 24-1/2 (622)** | | | 23-1/2 (597) |
| | UDXC | 3-11/32 (85) | | | | | 6-1/2 (165) | | | 7-5/16 (186) |
| L | UBXC | 6-15/32 (164) | | 5-15/32 (139) | 8-15/32 (215) | 7-15/32 (190) | 3-29/32 (99) | | 5-29/32 (150) | 1-13/32 (36) |
| M | UBXC | 10 (254) | 12-11/16 (322) | | 19-5/16 (491) | | 13-1/2 (343) | 14-9/16 (370) | 18-1/16 (459) | 22-9/16 (573) |
| | UDXC | 17-3/8 (441)** | | | | | 25-11/16 (652)** | | | 27-11/16 (703)** |
| N | UBXC | 6 (152) | 8-11/16 (221) | | 15-5/16 (389) | | 8-1/2 (216) | 9-9/16 (243) | 13-1/16 (332) | 17-1/16 (433) |
| | UDXC | 1-9/16 (40)** | | | | | 1-13/32 (36)** | | | |
| P | UBXC | 3-1/2 (89) | 6-5/16 (160) | | 9-9/16 (243) | | 5-7/16 (138) | | 9 (229) | 11-13/16 (300) |
| | UDXC | 4-9/32 (109)** | | | | | 8-1/8 (206)** | | | |
| Q | UBXC | 2-21/32 (74) | | | | | 4-3/16 (106) | | | 4-1/2 (114) |
| | UDXC | 13 (330)** | | | | | 22-3/16 (564)** | | | |
| R | UBXC | 5-31/32 (152) | 3-5/16 (84) | | | | 6-1/2 (165) | | | 7-5/16 (186) |
| | UDXC | 11-9/16 (294)*** | | | | | 16-3/8 (416)*** | | 15-5/8 (397)*** | 16-1/4 (413)*** |
| S | UBXC | 3-5/16 (84) | 5-29/32 (150) | | | | 8-3/16 (208) | | | 8-1/2 (216) |
| | UDXC | 3-3/4 (95) | 4-1/16 (103) | | 5-15/32 (139) | | 5-1/2 (140) | | 8-1/16 (205) | 11-9/16 (294) |
| T | UBXC | 31 (787) | | | | | 42 (1067) | | | |
| | UDXC | 2-15/16 (75) | | | | | 4-1/4 (108) | | 4-5/16 (110) | 4-1/2 (114) |

*Varies with motor selection and belt adjustment for unit sizes 150–400.

**Heater suspension points (3/8-16 FEM).

***Heater suspension points for two-point suspension (3/8-16 FEM).

## Weights

**Table 5. Weights**

| Model | Unit Size (MBTUh) | | | | | | | | | | | | | |
|---|---|---|---|---|---|---|---|---|---|---|---|---|---|---|
| | 30 | 45 | 60 | 75 | 100 | 125 | 150 | 175 | 200 | 225 | 250 | 300 | 350 | 400 |
| | Pounds (kg) | | | | | | | | | | | | | |
| UBXC | 84 (38) | 89 (40) | 102 (46) | 108 (49) | 168 (76) | 171 (78) | 300 (136) | 320 (145) | 320 (145) | 385 (175) | 400 (181) | 458 (208) | 494 (224) | 506 (230) |
| UDXC | 57 (26) | 62 (28) | 71 (32) | 76 (34) | 101 (46) | 106 (48) | 178 (81) | 193 (88) | 193 (88) | 211 (96) | 223 (101) | 277 (126) | 303 (137) | 316 (143) |

## Combustion Air Requirements

### *Combustion Air Requirements for Separated-Combustion Units*

Separated-combustion units require outside combustion air. Refer to the conversion instructions provided with the shipped-separate conversion kit.

### *Combustion Air Requirements for Standard Units*

**⚠ WARNING ⚠**

**Connecting a standard unit to outside combustion air intake ducts voids the warranty and could cause hazardous operation.**

Standard units are designed to take combustion air from the space in which the unit is installed and are not designed for connection to outside combustion air intake ducts. Standard units must be supplied with the air that enters into the combustion process and is then vented to the outdoors. Sufficient air must enter the equipment location to replace that which is exhausted through the heater vent system. Under all conditions, enough air must be provided to ensure that there will not be a negative pressure condition within the equipment room or space. Requirements for combustion air and ventilation air depend upon whether the unit is located in a confined or unconfined space. A ***confined*** space is defined as a space whose volume is <50 cubic feet per 1,000 BTUh of the installed appliance input rating. An ***unconfined*** space is defined as a space whose volume is ≥50 cubic feet per 1,000 BTUh of the installed appliance input rating. For confined space installation of standard units, provide openings (depending on the combustion air source) near the floor and ceiling for ventilation and air for combustion, as shown in **Figure 4** and as listed in **Table 6**.

**NOTE: For further details on supplying combustion air to a confined space, refer to the *National Fuel Gas Code* (ANSI Z223.1/NFPA 54, latest edition).**

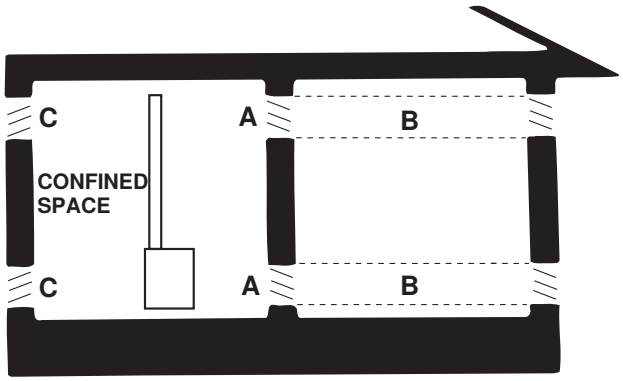


**Figure 4. Confined Space Combustion Air Openings (Refer to Table 6)**

| Table 6. Determining Confined Space Combustion Air Requirements | | | |
|---|---|---|---|
| **Letter*** | **Air Source** | **Required Opening Size** | **Calculate Combustion Air Requirements** |
| A | Air inside building | 1 square inch free area per 1000 BTUh | Add total BTUh of all appliances in confined space and divide by figures at left for square inch free area size of each (top and bottom) opening |
| | | Never <100 square inches free area for each opening | |
| B | Outside air through duct | 1 square inch free area per 2000 BTUh | |
| C | Direct outside air | 1 square inch free area per 4000 BTUh | |
| *See **Figure 4**. | | | |

# INSTALLATION

## Unpacking and Inspection

- The unit was test-operated and inspected at the factory prior to crating and was in operating condition.
- It is important to note when uncrating the unit that shipping brackets are attached with cabinet screws. When removing shipping brackets, re-insert ALL screws into the cabinet.
- If, upon removing it from its crate, the unit has been found to have incurred any damage in shipment, document the damage with the transporting agency and contact an authorized Factory Distributor. If you are an authorized Distributor, follow the FOB freight policy procedures.

## Pre-Installation Checklist

- ❑ Check the rating plate for the gas specifications and electrical characteristics of the heater to ensure that they are compatible with the gas and electric supplies at the installation site.
- ❑ Read this manual and become familiar with the installation requirements of your particular heater.
- ❑ If you do not have knowledge of local requirements, check with the local gas company or any other local agencies who might have requirements concerning this installation.
- ❑ Before beginning, make preparations for necessary supplies, tools, and manpower.
- ❑ **Field-removal of heat exchanger tube support—unit sizes 30–125 (optional):** in some cases, the heat exchanger tubes may have shifted during shipment, causing vibration noise against the support during unit operation. The primary function of the heat exchanger tube support is to support the heat exchanger tubes during shipment. This support can be removed without affecting the operation of the unit. It is recommended that the support be removed prior to installing the unit as follows:
  - a. Remove discharge air louvers, taking care not to lose springs.
  - b. Remove and discard two screws that secure heat exchanger support located on top of unit.
  - c. Remove heat exchanger support through discharge opening and discard support.
  - d. Reinstall discharge air louvers.
- ❑ If the heater is to be installed as a separated-combustion unit, convert the heater in accordance with the instructions provided in the conversion kit (option SC1, refer to **Table 7**) before proceeding with the installation.
- ❑ Check to see if there are any field-installed options (refer to **Table 7**) that need to be assembled/installed prior to unit installation. Ensure that all options ordered are at the installation site.

## Pre-Installation Checklist—Continued

**Table 7. Field-Installed Options**

| Option | Description |
|---|---|
| CC1 | Vent cap |
| CC2 | Vertical vent terminal kit |
| CC6 | Horizontal vent terminal kit |
| CC21 | Vent cap, stainless steel |
| CD1 | Vertical louvers to provide wider throw pattern |
| CD2 | Downturn nozzle, 25- to 65-degree variable air deflection range |
| CD3 | Downturn nozzle, 50- to 90-degree variable air deflection range |
| CD4 | Downturn nozzle, 25- to 65-degree variable air deflection range with vertical louvers |
| CD5 | Downturn nozzle, 50- to 90-degree variable air deflection range with vertical louvers |
| CD9 | Duct flange (model UBXC) |
| CD10 | Inlet blower and belt guard (model UBXC) |
| CD11 | Polytube adapter (model UBXC) |
| CD12 | Inlet blower guard (model UBXC) |
| CE1 | Manual shutoff valve, natural gas or propane |
| CG1 | 208V–115V stepdown transformer |
| CG4 | 230V–115V or 460V–115V stepdown transformer |
| CG5 | 575V–115V stepdown transformer |
| CK8 | Adapts 3/8-inch hangers for two-point suspension from 1-inch threaded pipe (model UDXC) |
| CK10 | Adapts 3/8-inch hangers for four-point suspension from 1-inch threaded pipe |
| CK22 | Angle brackets for low ceiling mounting (does not include hanger rods) |
| CL1 | Single-stage thermostat |
| CL22, CL23, CL83, CL84, CL90 | Two-stage thermostats |
| CL31, CL32 | Multiple unit control: option CL31 includes components for one control unit and one additional unit—option CL32 includes components for each additional non-control unit |
| CM1 | Locking thermostat cover |
| CM1B | Large locking thermostat cover |
| CM3 | Bracket assembly for mounting thermostat on unit |
| DJ20 | High-elevation pressure switch |
| DL2 | Propane conversion kit |
| SC1 | Separated-combustion conversion (requires option CC2 or CC6) |

## Heater Suspension

### ⚠ WARNING ⚠

- **Before suspending the heater, check the supporting structure to be used to verify that it has sufficient load-carrying capacity to support the weight (refer to Weights section) of the unit.**
- **The heater must be level for proper operation. DO NOT place or add additional weight to a suspended heater.**

### ⚠ CAUTION ⚠

- **Before lifting the heater, verify that any screws used for holding shipping brackets were re-installed in the cabinet.**
- **Before lifting a unit that has been converted to separated-combustion, any unused suspension points on the control side of the heater MUST be plugged.**
- **When the heater is lifted for suspension, support the bottom of the heater with plywood or other appropriately placed material. If the bottom is not supported, damage could occur.**

**NOTE: Four-point suspension is recommended. Two-point suspension is permitted only on unit sizes 30–125 of model UDXC when installed without a downturn nozzle or stepdown transformer.**

- A 3/8-16 threaded nut retainer is located at each suspension point. The heater may be suspended using either 3/8-inch threaded rods or a hanger kit option package.
- Shipped-separate option packages that should be installed before the heater is suspended include vertical louvers, high-elevation kit, multiple heater control, sensor for DDC control, and/or stepdown transformer. Installation instructions for these option packages are included in the option package.

### *Suspension of Heater Using Option CK8 or CK10 Hanger Kit*

Options CK8 (two-point suspension, model UDXC unit sizes 30–125) and CK10 (four-point suspension) are for suspending the heater using swivel connectors connected to 1-inch pipe. Install the swivel connectors at the 3/8-16 threaded nut retainers. Ensure that the swivel connectors are locked to the heater as shown in **Figure 5**.

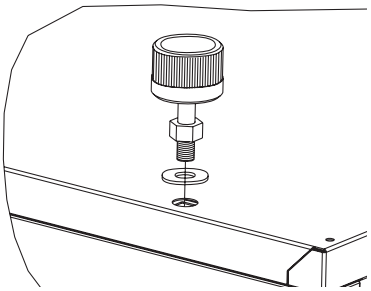

**Figure 5. Option CK8 or CK10 Hanger Kit**

### *Suspension of Heater Using Option CK22 Hanger Kit (Model UDXC, Unit Sizes 30–125)*

The ceiling suspension kit (option CK22) allows the heater to be installed 1 inch from the ceiling without hanger rods. The ceiling suspension kit is used only on model UDXC unit sizes 30–125. Refer to the installation instructions provided with the kit.

### *Heater Suspension Using Field-Supplied Threaded Rods*

The heater may be suspended from 3/8-inch threaded rods using either two- (model UDXC unit sizes 30–125) or four-point suspension. The recommended maximum rod length is 6 feet (1.8 meters). The length of the threaded rod extending into the heater **MUST NOT** exceed 1/2 inch (13 mm). Ensure that the threaded rods are locked to the heater as shown in **Figure 6**.

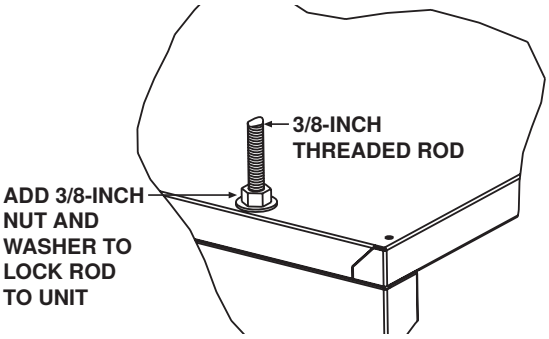


**Figure 6. Heater Suspension Using Field-Supplied Threaded Rods**

### *Suspension of Heater with Downturn Nozzle*

Ensure that any unit with a downturn nozzle (option CD2, CD3, CD4, or CD5) is installed using one of the above **FOUR-POINT** suspension methods. Follow the instructions provided with the downturn nozzle kit.

## Piping Connections

### *Gas Supply Pressure*

- The unit is equipped for a maximum gas supply pressure of 1/2 psi, 3.5 kPa, or 14 IN WC for natural gas or propane. The minimum supply pressure, as measured while the unit is operating at full fire, is 5 IN WC for natural gas or 11 IN WC for propane.
- Supply pressure higher than 1/2 psi requires the installation of an additional service regulator external to the unit.
- **Pressure testing supply piping:** For test pressures ***above*** 1/2 psi, disconnect the heater and manual valve from the gas supply line to be tested and cap or plug the supply line. For test pressures ***below*** 1/2 psi, before testing, close the manual valve on the heater.

### *Gas Supply Piping*

**⚠ DANGER ⚠**

- **All components of a gas supply system must be leak tested prior to placing equipment in service. NEVER TEST FOR LEAKS WITH AN OPEN FLAME. Failure to comply could result in personal injury, property damage, or death.**
- **Pipe joint compounds (pipe dope) shall be resistant to the action of liquefied petroleum gas or any other chemical constituents of the gas being supplied.**

**⚠ CAUTION ⚠**

- **All piping must be in accordance with requirements outlined in the *National Fuel Gas Code* (ANSI Z223.1, latest edition) or the *Natural Gas and Propane Installation Code* (CSA B149.1, latest edition).**
- **Gas supply piping installation shall conform with good practice and with local codes.**
- **Support gas piping with pipe hangers, metal strapping, or other suitable material. Do not rely on the heater to support the gas pipe.**

- The heater is orificed for operation with natural gas having a heating value of 1,050 (±50) BTU per cubic foot or with propane gas having a heating value of 2,550 (±100) BTU per cubic foot. Sizing of gas supply lines depends on piping capacity and is based on cubic feet per hour based on a 0.3 IN WC pressure drop, a 0.6 specific gravity for natural gas at 1,050 BTU per cubic feet, and a 1.6 specific gravity for propane at 2,550 BTU per cubic feet. If the gas at the installation does not meet this specification, consult the factory for proper orificing.
- Variables for sizing gas supply lines are listed in **Table 8**. When sizing supply lines, consider the possibility of future expansion and increased requirements (refer to the *National Fuel Gas Code* for additional information).

| Table 8. Gas Supply Line Sizes | | | | | | | | | | | | |
|---|---|---|---|---|---|---|---|---|---|---|---|---|
| Pipe Length (Feet) | Natural Gas | | | | | | Propane | | | | | |
| | Pipe Diameter (Inches) | | | | | | | | | | | |
| | 1/2 | 3/4 | 1 | 1-1/4 | 1-1/2 | 2 | 1/2 | 3/4 | 1 | 1-1/4 | 1-1/2 | 2 |
| | Cubic Feet per Hour | | | | | | | | | | | |
| 20 | 92 | 190 | 350 | 730 | 1100 | 2100 | 56 | 116 | 214 | 445 | 671 | 1281 |
| 30 | 73 | 152 | 285 | 590 | 890 | 1650 | 45 | 93 | 174 | 360 | 543 | 1007 |
| 40 | 63 | 130 | 245 | 500 | 760 | 1450 | 38 | 79 | 149 | 305 | 464 | 885 |
| 50 | 56 | 115 | 215 | 440 | 670 | 1270 | 34 | 70 | 131 | 268 | 409 | 775 |
| 60 | 50 | 105 | 195 | 400 | 610 | 1105 | 31 | 64 | 119 | 244 | 372 | 674 |
| 70 | 46 | 96 | 180 | 370 | 560 | 1050 | 28 | 59 | 110 | 226 | 342 | 641 |
| 80 | 43 | 90 | 170 | 350 | 530 | 990 | 26 | 55 | 104 | 214 | 323 | 604 |
| 90 | 40 | 84 | 160 | 320 | 490 | 930 | 24 | 51 | 98 | 195 | 299 | 567 |
| 100 | 38 | 79 | 150 | 305 | 460 | 870 | 23 | 48 | 92 | 186 | 281 | 531 |
| 125 | 34 | 72 | 130 | 275 | 410 | 780 | 21 | 44 | 79 | 168 | 250 | 476 |
| 150 | 31 | 64 | 120 | 250 | 380 | 710 | 19 | 39 | 73 | 153 | 232 | 433 |
| 175 | 28 | 59 | 110 | 225 | 350 | 650 | 17 | 36 | 67 | 137 | 214 | 397 |
| 200 | 26 | 55 | 100 | 210 | 320 | 610 | 16 | 34 | 61 | 128 | 195 | 372 |

### *Supply Piping Connections*

**NOTE: The *National Fuel Gas Code* requires the installation of a minimum 3-inch sediment trap with a drip leg. Local codes may require a sediment trap longer than 3 inches (typically 6 inches). To permit burner removal, this sediment trap must extend beyond the edge of the heater.**

Connect the gas supply piping as follows (see **Figure 7**):

1. Make gas connection (refer to **Table 9** for gas connection sizes) at pipe nipple that extends outside cabinet using ground joint union.
2. Install manual shutoff valve upstream of unit control system. Manual shutoff valve's 1/8-inch plugged tapping provides connection for supply line pressure test gauge.
3. Install minimum 3-inch sediment trap (typically 6 inches).
4. Bleed trapped air from gas lines as needed.
5. Leak test all connections using leak detecting solution.

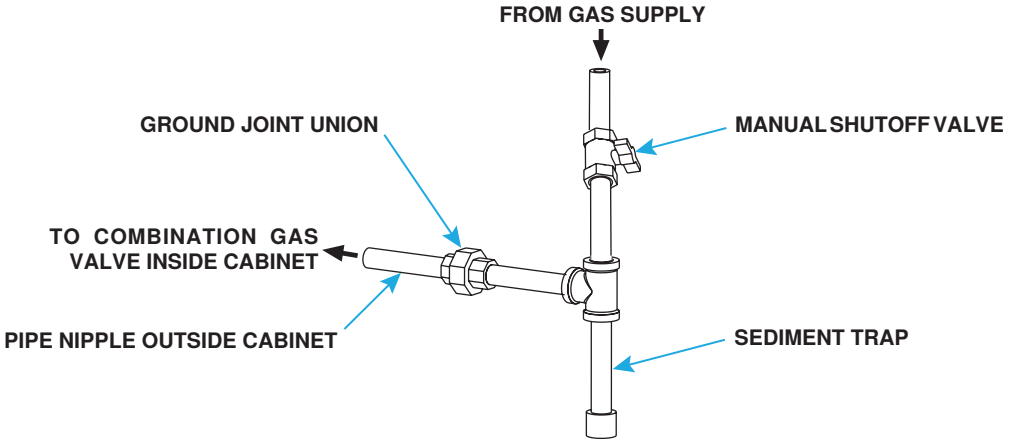


**Figure 7. Gas Connections**

| Table 9. Gas Connection Sizes | |
|---|---|
| Unit Size (MBTUh) | |
| 30–200 | 225–400 |
| Natural Gas or Propane Connection (Inches)* | |
| 1/2 | 3/4 |
| *Connection size for a standard unit (not gas supply line size). | |

## Electrical Connections

**⚠ CAUTION ⚠**

- **All electrical wiring and connections, including electrical grounding MUST BE made in accordance with the *National Electric Code* (ANSI/NFPA No. 70, latest edition) or, in Canada, the *Canadian Electric Code* (Part 1, CSA C.22.1). In addition, the installer should be aware of any local ordinances or gas company requirements that might apply.**
- **Route wires so that they do not contact the flue wrapper or venter housing.**
- **If any of the original wire supplied with the appliance must be replaced, it must be replaced with wiring material having a temperature rating of at least 220°F (105°C), except for limit control, flame rollout, and sensor lead wires which must be rated at 302°F (150°C).**

**NOTE: Ensure that all wiring is in accordance with the wiring diagram provided with the unit. A two-stage valve circuit is NOT available on all models.**

If the installation requires a stepdown transformer, follow the instructions shipped with the option package for installing the transformer. All units have a built-in disconnect switch (see **Figure 8**).

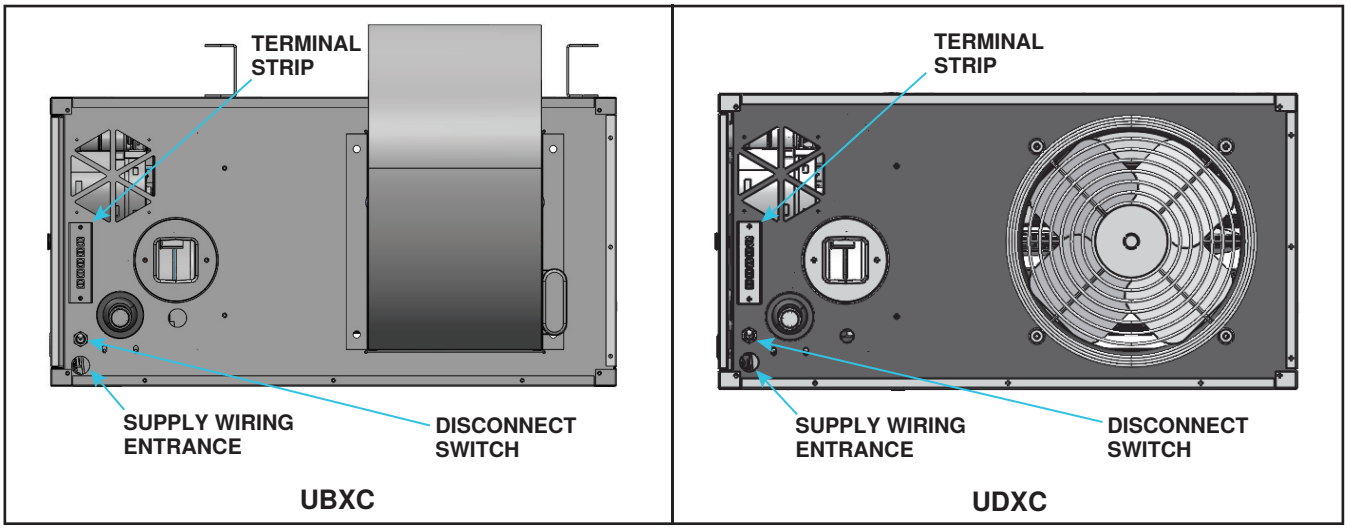


**Figure 8. Supply Wiring Entrance and Control Connection Terminal Strip**

### *Supply Wiring Connection*

**⚠ CAUTION ⚠**

- **Check the rating plate on the heater for the supply voltage and current requirements.**
- **A dedicated line voltage supply with a disconnect switch MUST BE run directly from the main electrical panel to the heater.**
- **All external wiring MUST BE within approved conduit and have a minimum temperature rise rating of 140°F (60°C). Conduit MUST BE run so as not to interfere with the heater access panel.**

The supply wiring enters at the rear of the heater as shown in **Figure 8** and connects to the green, white, and black wire leads inside the control compartment. Install a strain relief bushing in the supply wiring entrance.

### *Control Connections*

Make thermostat connections at the terminal strip on the back of the heater (see **Figure 8**). The strip has five terminals: C, R, G, W1, and W2. Refer to the wiring diagram provided with the heater. Wires from the terminal strip are factory-wired to the circuit board. Ensure that if there is a heat anticipator setting on the thermostat, it is set at 0.6 amps or in accordance with the amperage value noted on the heater wiring diagram. If the installation features a heater and a model H destratification fan controlled by a single two-stage thermostat, ensure that the wiring is in accordance with the wiring diagram shown in **Figure 9**.

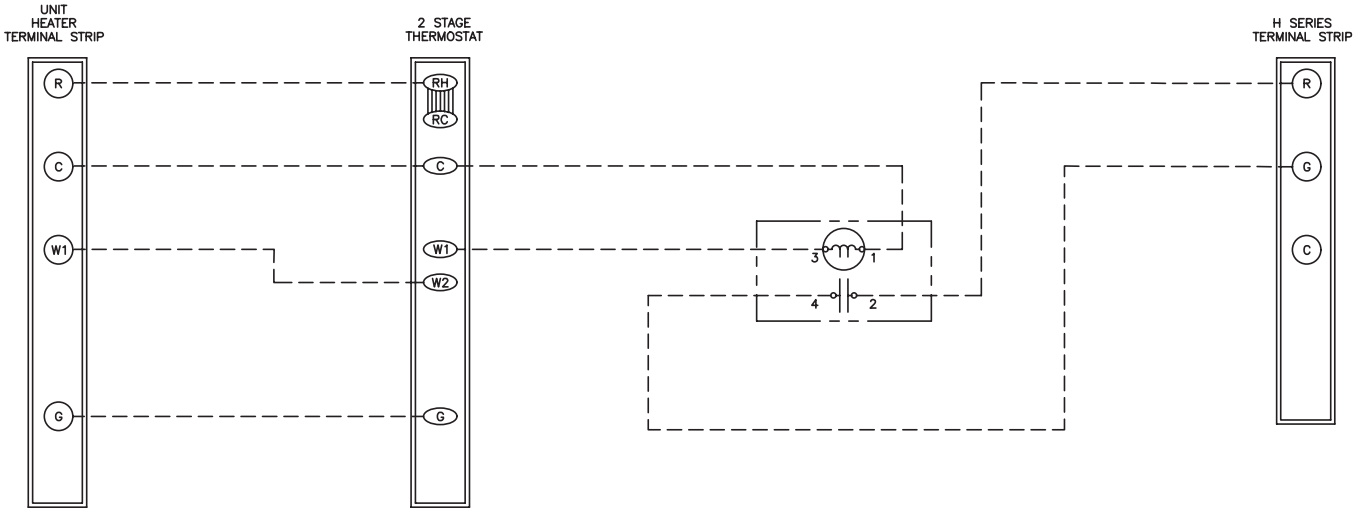


**Figure 9. Heater and Destratification Fan Wiring Diagram**

### *Circuit Board Connection*

The circuit board (see **Figure 10**) is located inside on the bottom of the control compartment. The circuit board is polarity sensitive. The circuit board is factory-wired, but it is advisable to check to ensure that the black wire is the hot wire connected to terminal L1 and that the white wire is the neutral wire.

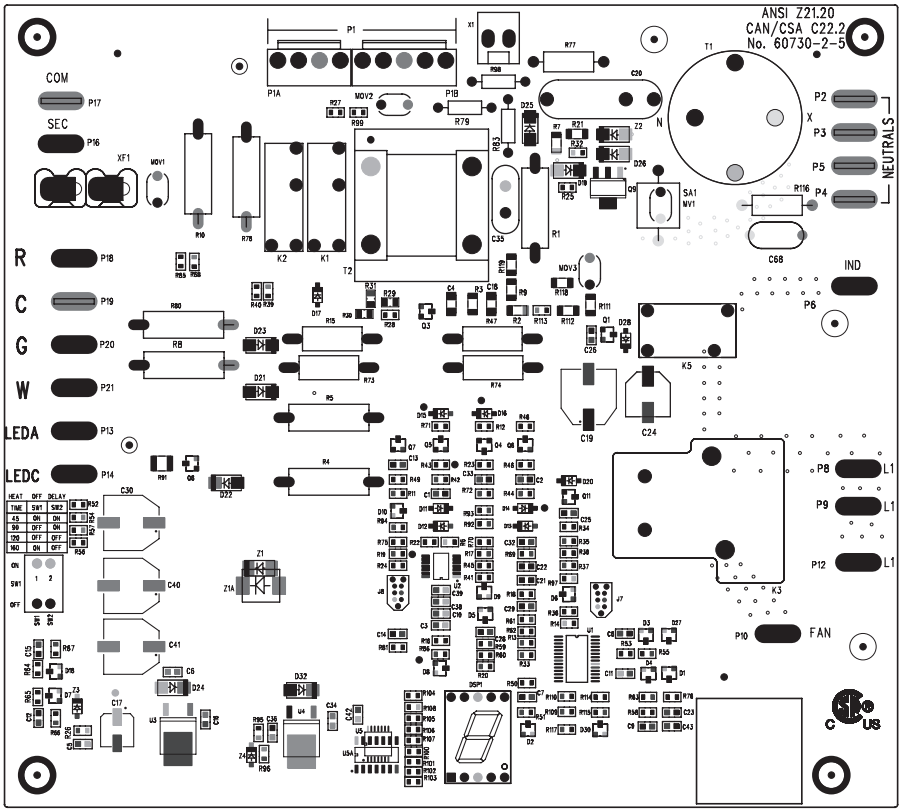


**Figure 10. Circuit Board (DSI Control Module)**

## ⚠ CAUTION ⚠

- **When an existing appliance is removed or replaced in a venting system, verify that the venting system is properly sized to vent the new appliance. An improperly sized venting system may result in the formation of condensate, leakage, and/or spillage.**
- **DO NOT vent into an existing gravity vent or chimney.**
- **DO NOT intermix different vent system parts from different manufacturers in the same venting system.**

**NOTE: Venting must be in accordance with local codes and with the *National Fuel Gas Code* (ANSI Z223.1) or the *Installation Code for Gas Burning Appliances and Equipment* (CSA B149.1). Local requirements supersede national requirements.**

The method of venting varies depending on the installation type: Category III venting for most installations or Category I, commercial/industrial or residential locations, and vent configuration—common or not. Category I venting is used for model UDXC size 30–100 units with either a dedicated vent or a common (with another appliance) vent. Category III venting may be used for all models and sizes. Refer to **Table 10** for a list of Category III vent manufacturers. Follow the listed **General Venting Requirements** and the specific instructions listed in the **Vent System Installation Procedures** section.

**Table 10. Category III Vent Manufacturers**

| Manufacturer | Model(s) | Diameter (Inches) |
|---|---|---|
| CaptiveAire Systems | 2V-Type BH | — |
| Cheminee Lining E Inc. | IPP, HEP, HEPL, HEPLA, HEPL1, and HEPL2 | 6–48 |
| Cleaver-Brooks Inc. | CBH, CBHL, CBHL2, CBHLA, and CBHL1 | |
| DuraVent Inc. | FasNSeal fixed blade damper assembly | 4–18 (ID) |
| | FasNseal special gas vent assembly | — |
| | FasNSeal W2 special gas vent system | |
| | FasNSmooth chimney liner system for use in masonry chimneys only | |
| | FasNSeal CVS special gas vent system and direct vented pellet system | |
| | S-Vent and PVP | 4 and 5 |
| ENERVEX Inc. | EPS and EPS-1 | 4–48 |
| ECCO Manufacturing Division of ECCO Heating Products Ltd. | SGDW series | 3–6 |
| ICC Industrial Chimney Co. | VIC | 4–24 |
| Industrial Combustion LLC | ICH, ICHL, ICHLA, ICHL1, and ICHL2 | 4–48 |
| Jeremias Inc. | DWKL, SWKL, DWFL, and SWFL | 4–36 |
| | DWGV double-wall, air-insulated, 1 inch between inner and outer pipe diameter | — |
| | DWGV1 double-wall, fiber-insulated, 1 inch between inner and outer pipe diameter | |
| | DWGV2 double-wall, fiber-insulated, 2 inches between inner and outer pipe diameter | |
| | SWGV single-wall | 4–12 |
| Lifetime Chimney Supply LLC | Xi1, Xi2, and Xi4 | 5 |
| METAL-FAB Inc. | CGSW, FCSSW, CG, FCS, FCG-1, and FCS-1 | 6–24 (ID) |
| | FCGSW, FCG, FCG-1, FCS-3 CORR/GUARD, and FCS-2 CORR/GUARD | 6–36 (ID) |
| | CGSW, CG, FCG, 3CGSWHVK, and 4CGSWHVK | 4 and 5 |
| Noritz America Corporation | N-Vent | 4 and 5 |
| Rheem Sales Co. Inc. | RTG | 3 |
| Security Chimneys International Ltd. | Secure Seal Flex chimney lining system | 3–12 |

| Table 10. Category III Vent Manufacturers—Continued | | |
|---|---|---|
| **Manufacturer** | **Model(s)** | **Diameter (Inches)** |
| Selkirk Corporation | Saf-T-CI and Saf-T C1 | 4, 5, and 6 |
| | Saf-T-Vent | 3–6 and 8 |
| | EZ Seal | 3–6 |
| | SGV | 3, 4, and 5 |
| | CI Plus | 6 and 8 |
| | SC, DGV, EZ Seal Quick Kit, Sel-Vent, and Sel-Vent II | 4 |
| | IPS316, PS316, and G316 | 5 and 6 |
| SFL Flue & Chimney | DEVON EPS and EPS-1 | 4–6 |
| The Schebler Co. | SSD, ESW, eVent, and eVent PLUS | 2 and 4–6 |
| | eVent SD | 4–6 |
| Sunair Products | SADW-2V and SADW-V | 4 |
| Tokyo Gas Renovation Co. Ltd. | KP and KC | 4 and 5 |
| | N-Vent | 3, 4, and 5 |
| Van-Packer Co. Inc. | MW, CS, and CSplus | 4–6 (ID) |
| Z-FLEX US Inc. | SVE and SVEII | 3 and 4 |
| | SVEIII | 2, 3, and 4 |
| | SVEIV single-wall and SVEIV double-wall | 4, 5, and 6 |
| | NovaVent single-wall and NovaVent double-wall | |
| | Z-VentBlu single-wall and Z-VentBlu double-wall | 3, 4, and 5 |

## General Venting Requirements

For venting separated-combustion units, follow these general requirements as well as the separated-combustion conversion instructions provided with the conversion kit.

### *Condensation Mitigation Requirements*

**⚠ CAUTION ⚠**

- **Failure to pitch the vent run properly may damage the heater due to condensate running back into the unit.**
- **Exceeding vent pipe diameter and length requirements may result in condensate forming in the vent pipe.**

- For units with long vent runs—over 50% of maximum vent length allowed—or installed in low ambient conditions (below 50°F (10°C), it is recommended that vent pipes be fitted at the low point of the vent system with a tee, a drip leg, and a cleanout cap to prevent any moisture in the vent pipe from entering the unit. The drip leg should be inspected and cleaned out periodically during the heating season.
- Any length of single-wall vent pipe exposed to cold air or run through an unheated area or an area with an ambient temperature of 50°F (10°C) or less, must be insulated along its entire length with a minimum of 1/2-inch foil-faced fiberglass, 1-1/2# density insulation.
- For horizontal vent runs, the flue pipe must be pitched down toward the terminal end—1/4-inch per foot for condensate drainage—for the entire length of the horizontal vent run.

## General Venting Requirements—Continued

### *Vent Pipe Size Requirements*

**Table 11. Vent Pipe Size for Horizontal and Vertical Vents**

| Unit Size (MBTUh) | Vent Pipe Diameter (Inches (mm)) | Maximum Vent Length | Equivalent Straight Length* | | Venter Outlet Connection** |
|---|---|---|---|---|---|
| | | | 90-Degree Elbow | 45-Degree Elbow | |
| | | Feet (Meters) | | | |
| 30 | 3 (76) | 20 (6.1) | 3 (0.9) | 1.5 (0.5) | 4- to 3-inch (102- to 76-mm) reducer |
| | 4 (102) | 10 (3) | 2 (0.6) | 1 (0.3) | — |
| 45 | 3 (76) | 20 (6.1) | 3 (0.9) | 1.5 (0.5) | 4- to 3-inch (102- to 76-mm) reducer |
| | 4 (102) | 10 (3) | 2 (0.6) | 1 (0.3) | — |
| 60 | 3 (76) | 30 (9.1) | 4 (1.2) | 2 (0.6) | 4- to 3-inch (102- to 76-mm) reducer |
| | 4 (102) | 15 (4.6) | 2 (0.6) | 1 (0.3) | — |
| 75 | 4 (102) | 30 (9.1) | 4 (1.2) | 2 (0.6) | |
| 100 | 4 (102) | 40 (12.2) | 5 (1.5) | 2.5 (0.8) | |
| 125 | 4 (102) | 40 (12.2) | 5 (1.5) | 2.5 (0.8) | |
| 150 | 5 (127) | 35 (10.7) | 5 (1.5) | 2.5 (0.8) | |
| 175 | 5 (127) | 35 (10.7) | 5 (1.5) | 2.5 (0.8) | |
| 200 | 5 (127) | 50 (15.2) | 5 (1.5) | 2.5 (0.8) | |
| 225 | 5 (127) | 50 (15.2) | 5 (1.5) | 2.5 (0.8) | |
| 250 | 5 (127) | 50 (15.2) | 5 (1.5) | 2.5 (0.8) | |
| 300 | 6 (152) | 50 (15.2) | 5 (1.5) | 2.5 (0.8) | |
| 350 | 6 (152) | 50 (15.2) | 7 (2.1) | 3.5 (1.1) | |
| | 7 (178) | 50 (15.2) | 4.5 (1.4) | 2.25 (0.7) | 6- to 7-inch (152- to 178-mm) enlarger |
| 400 | 6 (152) | 50 (15.2) | 8 (2.4) | 4 (1.2) | — |
| | 7 (178) | 50 (15.2) | 5 (1.5) | 2.5 (0.8) | 6- to 7-inch (152- to 178-mm) enlarger |

*Add all straight sections and equivalent lengths for elbows—the total combined length must not exceed the maximum vent length.

**Field-supplied taper-type connection required at the venter outlet.

### *Vent System Sealing Requirements*

Vent system joints depend on the type of pipe being used:

- **Category III pipe:** follow manufacturer's instructions for joining pipe sections—connect venter outlet or the vent cap using secure, sealed joints that follow a procedure best suited to the style of Category III pipe being used.
- **Single-wall galvanized pipe (26-gauge or heavier):** secure slip-fit connections using sheet metal screws or rivets—seal all joints and seams in accordance with local codes.
- **For Category I vents:** when connecting Type B double-wall pipe to single-wall pipe or to the vent collar, use an adapter made by the Type B double-wall pipe manufacturer for that purpose and follow the Type B double-wall pipe manufacturer's instructions.
- **Double-wall Type B vent pipe:** join pipe sections in accordance with the pipe manufacturer's requirement—refer to the illustrated instructions in **Figure 11** to connect double-wall pipe to the heater collar, single-wall pipe, and vent cap. Work quickly to assemble components before sealant dries.

**STEP 1: Place continual 1/4-inch bead of silicone sealant around circumference of single-wall pipe.**

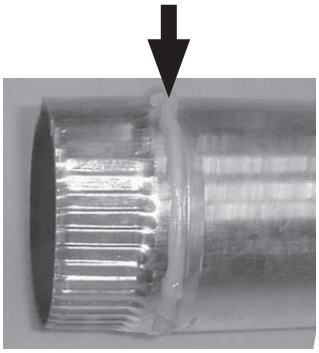

**STEP 2: Before sealant can dry, insert single-wall pipe into inner pipe of double-wall pipe until bead of sealant contacts inner pipe to create sealed joint.**

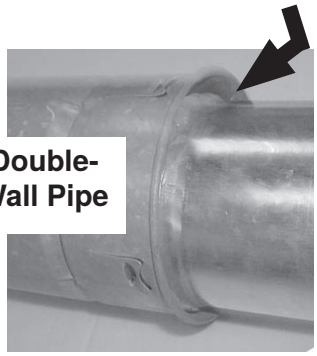


**STEP 3: Drill three small holes spaced equally around double-wall pipe below sealant ring. Secure joint using 3/4-inch-long sheet metal screws. Do not overtighten screws.**

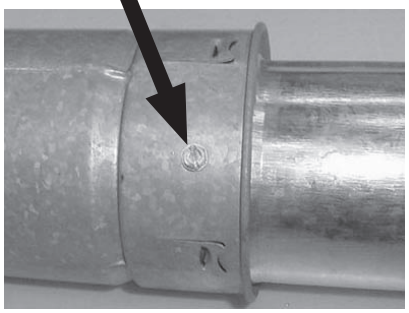

**STEP 4: Place continual 3/8-inch bead of silicone sealant around he circumference of vent cap collar to prevent any water inside vent cap from running down double-wall pipe.**

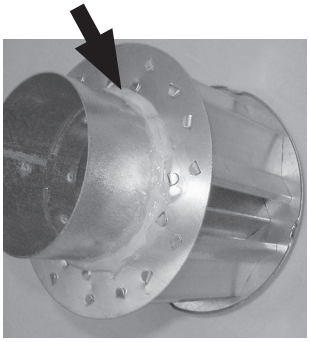

**STEP 5: Before sealant can dry, insert collar on vent cap as far as possible inside inner wall of double-wall pipe. Apply silicone sealant to fully close any gaps between vent cap and double-wall pipe to prevent water from entering double-wall pipe.**

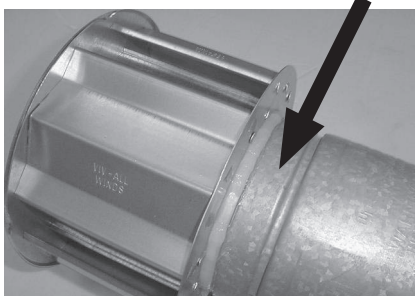

**STEP 6: Drill small hole through vent cap and double-wall pipe. Secure joint using 3/4-inch-long sheet metal screw. Do not overtighten screw.**

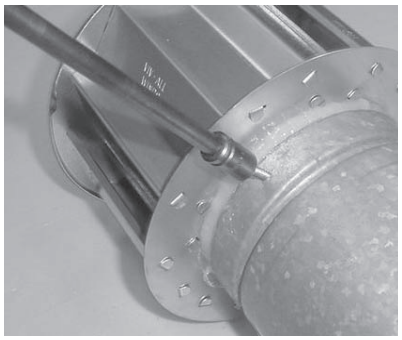

**STEP 7: Place continual 1/4-inch bead of silicone sealant around circumference of venter outlet collar.**

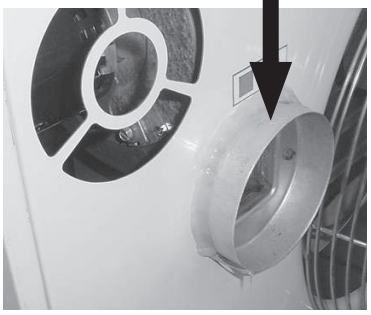

**STEP 8: Before sealant can dry, slide double-wall pipe over collar so that collar is inside inner pipe. Push double-wall pipe tight to heater cabinet. Drill three small holes through the pipe and into collar spaced equally around pipe below sealant ring. Secure joint using 3/4-inch-long sheet metal screws. Do not overtighten screws.**

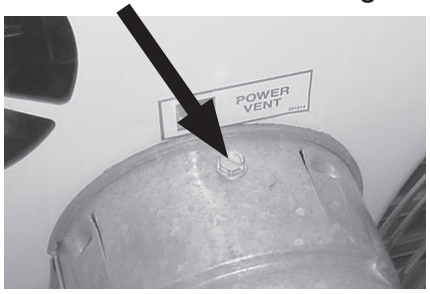


**Figure 11. Instructions for Connecting Double-Wall Type B Vent Pipe to Single-Wall Pipe**

## General Venting Requirements—Continued

### *Vent System Support Requirements*

**⚠ CAUTION ⚠**

- **Do not rely on the heater to support either horizontal or vertical vent pipe.**
- **Use non-combustible supports on vent pipe.**

- Support horizontal runs every 6 feet (1.8 meters).
- Support vertical runs in accordance with the pipe manufacturer's requirements.
- Support single-wall pipe in accordance with accepted industry practice.

### *Vent Terminal Requirements*

**⚠ DANGER ⚠**

- **Do not enclose the vent pipe or place it closer than 6 inches (152 mm) to combustible material.**
- **To prevent combustion products from entering the occupied space, all vent terminations must be positioned or located away from fresh air intakes, doors, and windows. Failure to comply could result in severe personal injury or death and/or property damage.**
- **Consider local snow depth conditions. The vent must be at least 6 inches (152 mm) above the anticipated snow depth.**

**⚠ WARNING ⚠**

- **A different style vent cap could cause nuisance problems or unsafe conditions. The vent cap must be the same size as the vent pipe.**
- **Do not locate a vent termination where it may cause hazardous frost or ice accumulations on adjacent property surfaces.**
- **Maintain the required clearance from the wall to the vent terminal cap for stability under wind conditions and to protect the building.**

**⚠ CAUTION ⚠**

**Products of combustion can cause discoloration of some building finishes and deterioration of masonry materials. Applying a clear silicone sealant that is normally used to protect concrete driveways can protect masonry materials. If discoloration is an esthetic problem, relocate the vent or install a vertical vent.**

- For Category I vents:
  a. Where the vent extends through the roof, a clearance thimble is required when the flue pipe extends through combustible materials. Follow the requirements of the double-wall pipe manufacturer.
  b. Maintain a 6-inch (152-mm) clearance between a single-wall vent pipe and combustibles.
  c. For Type B double-wall vent pipe, follow the pipe manufacturer's recommendations for clearance to combustibles.

- Vertical vents must terminate a minimum horizontal and vertical distance from roof lines and adjacent walls or obstructions. For vertical vents with double wall vent pipe and a vent cap size of ≤12 inches (≤305 mm):
  a. **Vent is >8 feet (>2.44 meters) horizontally from any vertical wall or obstruction:** terminate the vent at least 2 feet (0.61 meters) above the highest point where it passes through a roof or any part of a building.
  b. **Vent is <8 feet (<2.44 meters) horizontally from any vertical wall or obstruction:** terminate the vent in accordance with **Figure 12** and **Table 12**.

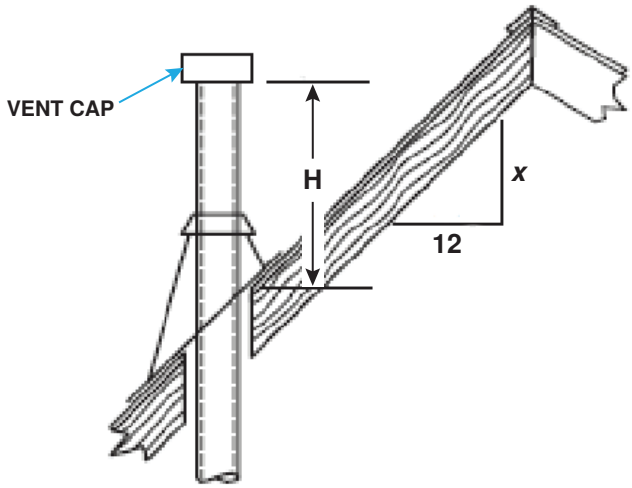


**Figure 12. Double-Wall Vertical Vent Height Based on Roof Pitch**

| Table 12. Double-Wall Vertical Vent Height | | | | | | | | | | | |
|---|---|---|---|---|---|---|---|---|---|---|---|
| Variable *x* (See Figure 12) = Roof Pitch Numerator (Inches)* | | | | | | | | | | | |
| ≤6 | >6–7 | >7–8 | >8–9 | >9–10 | >10–11 | >11–12 | >12–14 | >14–16 | >16–18 | >18–20 | >20–21 |
| Dimension H (See Figure 12) = Minimum Height to Lowest Discharge Opening (Feet (Meters)) | | | | | | | | | | | |
| 1.0 (0.30) | 1.25 (0.38) | 1.5 (0.46) | 2.0 (0.61) | 2.5 (0.76) | 3.25 (0.99) | 4.0 (1.22) | 5.0 (1.52) | 6.0 (1.83) | 7.0 (2.13) | 7.5 (2.27) | 8.0 (2.44) |
| *Roof pitch = *x*/12 inches. | | | | | | | | | | | |
| NOTE: The values above apply to vents <8 feet (<2.44 meters) horizontally from any vertical wall or obstruction. | | | | | | | | | | | |

- For Category III vents, refer to **Table 13** for horizontal vent terminal clearances.

| Table 13. Minimum Clearance Requirements for Category III Horizontal Vent Terminal | |
|---|---|
| **Component/Structure** | **Minimum Clearance, All Directions Unless Specified (Feet (Meters))** |
| Forced air inlet within 10 feet (3.1 meters)* | 3 (0.9) above |
| Combustion air inlet of another appliance | 6 (1.8) |
| Mechanical air supply inlet to any building | Canada: 6 (1.8) |
| Any building opening (door, window, or gravity air inlet) | 4 (1.2) horizontal and below |
| | 1 (0.3) above |
| Gas meter,** electric meter, and relief equipment | US: 4 (1.2) horizontal |
| | Canada: 6 (1.8) horizontal |
| Gas regulator** | US: 3 (0.9) horizontal |
| | Canada: 6 (1.8) horizontal |
| Adjoining building or parapet | 6 (1.8) |
| Adjacent public walkway | 7 (2.1) above |
| Grade (ground level) | 3 (0.9) above |
| *Does not apply to the inlet of a direct vent appliance. | |
| **Do not terminate the vent directly above a gas meter or service regulator. | |

## General Venting Requirements—Continued

### *Venter (Flue) Outlet Diameter*

- Depending on the size of vent pipe, either attach the vent pipe directly to the collar or to a taper-type connector.
- For Category III vent pipe, attach a 4-inch appliance adapter (available from the Category III pipe manufacturer) directly to the collar and then use a reducer if using 3-inch pipe.

**Table 14. Venter (Flue) Outlet Diameter**

| Unit Size (MBTUh) | | |
|---|---|---|
| **30, 45, 60, 75, 100, 125** | **150, 175, 200, 225, 250** | **300, 350, 400** |
| **Inches (mm)** | | |
| 4 (102)* | 5 (127) | 6 (152) |

*Unit size 100 requires a 5-inch (127-mm) vent when vented as Category I.

## Vent System Installation Procedures

**NOTE: Residential installations of unit sizes 30–100 with a vertical common vent may use a Category I vent but Category III is recommended—Category III is required for unit size 125.**

Vent systems vary depending on whether the installation is residential or commercial/industrial, whether the vent is dedicated or common, and whether the unit is standard or has been converted to separated-combustion. Select and follow the venting instructions that apply to the installation only.

### *Category I Residential Installations with Vertical Dedicated Vent (Model UDXC)*

Residential installations of model UDXC unit sizes 30–100 may use a Category I dedicated vent. Install the vent as follows:

**NOTE: Unit sizes 60–100 may use single- or double-wall vent connector.**

1. Select vent pipe and vent connector for Category I vent (see **Figure 13**).
2. Determine vent pipe diameter and length in accordance with **Table 11**.
3. Determine venter (flue) outlet diameter (refer to **Venter (Flue) Outlet Diameter** section).
4. Make all vent pipe joint connections in accordance with **Vent System Sealing Requirements** section.
5. Properly support all vent pipe runs in accordance with **Vent System Support Requirements** section.
6. Take appropriate steps to mitigate condensation in accordance with **Condensation Mitigation Requirements** section.
7. Terminate vent with option CC1 vent cap. Ensure that vent terminal is installed in accordance with **Vent Terminal Requirements** section.

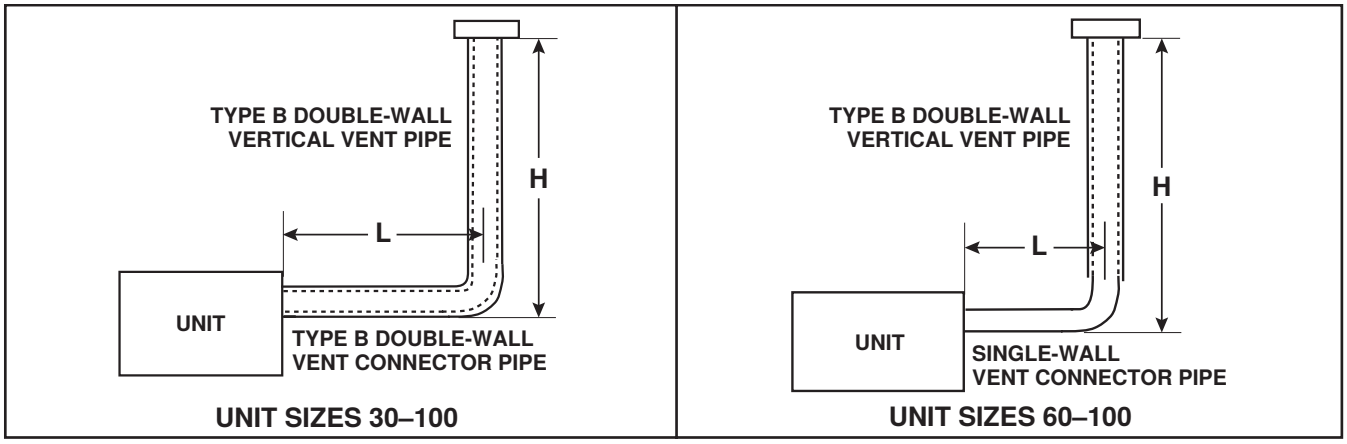


**Figure 13. Typical Category I Dedicated Vent (Refer to Table 15)**

**Table 15. Required Category I Vertical Vent Pipe and Vent Connector Lengths**

| Vent Connector Pipe | Vent Pipe Diameter (Inches (mm)) | Dimension H* (Feet (Meters)) | Unit Size (MBTUh) | | | | |
|---|---|---|---|---|---|---|---|
| | | | 30 | 45 | 60 | 75 | 100 |
| | | | Dimension L* (Feet (Meters)) | | | | |
| Double-wall | 4 (102) | 6 (1.8) | 4 (1.2) | 6 (1.8) | | | — |
| | | 8 (2.4) | — | 8 (2.4) | | | |
| | | 10 (3.0) | 2 (0.6) | 5 (1.5) | 10 (3.0) | | |
| | | 15 (4.6) | 5 (1.5) | | 15 (4.6) | | |
| | | 20 (6.1) | | | 20 (6.1) | | |
| | 5 (127)** | 6 (1.8) | — | | | | 6 (1.8) |
| | | 8 (2.4) | — | | | | 8 (2.4) |
| | | 10 (3.0) | — | | | | 10 (3.0) |
| | | 15 (4.6) | — | | | | 15 (4.6) |
| | | 20 (6.1) | — | | | | 20 (6.1) |
| | | 30 (9.1) | — | | | | 30 (9.1) |
| Single-wall | 4 (102) | 6 (1.8) | — | | 2 (0.6) | 2 (0.6) | — |
| | | 8 (2.4) | — | | | 4 (1.2) | |
| | | 10 (3.0) | — | | | | |
| | | 15 (4.6) | — | | | 5 (1.5) | |
| | | 20 (6.1) | — | | | | |
| | 5 (127)** | 6 (1.8) | — | | | | 4 (1.2) |
| | | 8 (2.4) | — | | | | |
| | | 10 (3.0) | — | | | | 5 (1.5) |
| | | 15 (4.6) | — | | | | |
| | | 20 (6.1) | — | | | | |

*See Figure 13. H = vertical vent pipe length. L = maximum permitted horizontal vent connector length.

**Permitted only on unit size 100 for a Category I vent.

***Category I Commercial/Industrial/Residential Installations with Vertical Dedicated Vent (Model UDXC)***

## ⚠ DANGER ⚠

**All Category I heaters that are vented vertically must be connected to a chimney or vent that complies with a recognized standard or must be connected to a lined masonry (or concrete) chimney with a material acceptable to the authority having jurisdiction. Venting into an unlined masonry chimney is not permitted.**

Commercial/Industrial installations of either model or residential installations of model UDXC unit sizes 30–100 may use a Category I vertical dedicated vent. To permit this, the vent must terminate at least 5 feet above the vent outlet of the heater. Refer to Table 15 for required vent lengths. Install the vent as follows:

## Vent System Installation Procedures—Continued

***Category I Commercial/Industrial or Residential (Model UDXC) Installations with Vertical Dedicated Vent—Continued***

1. Select type of pipe for standard vertical (Category I) vent. Double-wall vent pipe is recommended. Use single-wall vent pipe if requirements of the *National Fuel Gas Code* are followed.
2. Determine vent pipe diameter and length for vertical vent. Unit sizes 30–75 require 4-inch vent. Unit size 100 requires 4- to 5-inch adapter and 5-inch pipe.
3. Determine venter (flue) outlet diameter (refer to **Venter (Flue) Outlet Diameter** section).
4. Make all vent pipe joint connections in accordance with **Vent System Sealing Requirements** section.
5. Properly support all vent pipe runs in accordance with **Vent System Support Requirements** section.
6. Take appropriate steps to mitigate condensation in accordance with **Condensation Mitigation Requirements** section.
7. Terminate vent as follows:
   a. Install UL listed Category I terminal vent pipe and terminate vent with option CC1 or CC21 vent cap or Novavent #2NVTB4 vent cap.
   b. Ensure that vent terminal is installed in accordance with **Vent Terminal Requirements** section.

***Category I Residential Installations with Common Vent (Model UDXC)***

**⚠ DANGER ⚠**

**The installer must comply with the venting requirements listed in this section, with the instructions provided for other appliances that are to be commonly vented with the unit, and with applicable local codes. Verify that any appliances being commonly vented with the unit are designed for Category I common venting. Failure to comply may result in severe injury, death, and/or property damage.**

Residential installations of model UDXC unit sizes 30–100 may use a Category I common vent. Common venting is when two or more Category I appliances are vented into a single vertical vent. Install the vent as follows:

1. Select vent pipe and vent connector for Category I vent (see **Figure 14**). Unit sizes 30–75 use 4-inch pipe. Unit size 100 uses 5-inch pipe with an adapter.
2. Determine vertical height of vent based on vent capacity in accordance with **Table 16**.

**NOTE: Table 16 applies to Type B double-wall common vents including lined masonry chimneys. If a conflict in capacity occurs with other instructions, the more conservative capacity must be chosen.**

3. Determine maximum length of horizontal connector pipe in accordance with **Table 17**.

**NOTE: When two or more vent connectors enter a common vent, the smaller connector shall enter at the highest level consistent with available headroom or clearances to combustible material.**

4. Determine venter (flue) outlet diameter (refer to **Venter (Flue) Outlet Diameter** section).
5. Make all vent pipe joint connections in accordance with **Vent System Sealing Requirements** section.
6. Properly support all vent pipe runs in accordance with **Vent System Support Requirements** section.

7. Take appropriate steps to mitigate condensation in accordance with **Condensation Mitigation Requirements** section.
8. Terminate vent with option CC1 vent cap. Ensure that vent terminal is installed in accordance with **Vent Terminal Requirements** section.

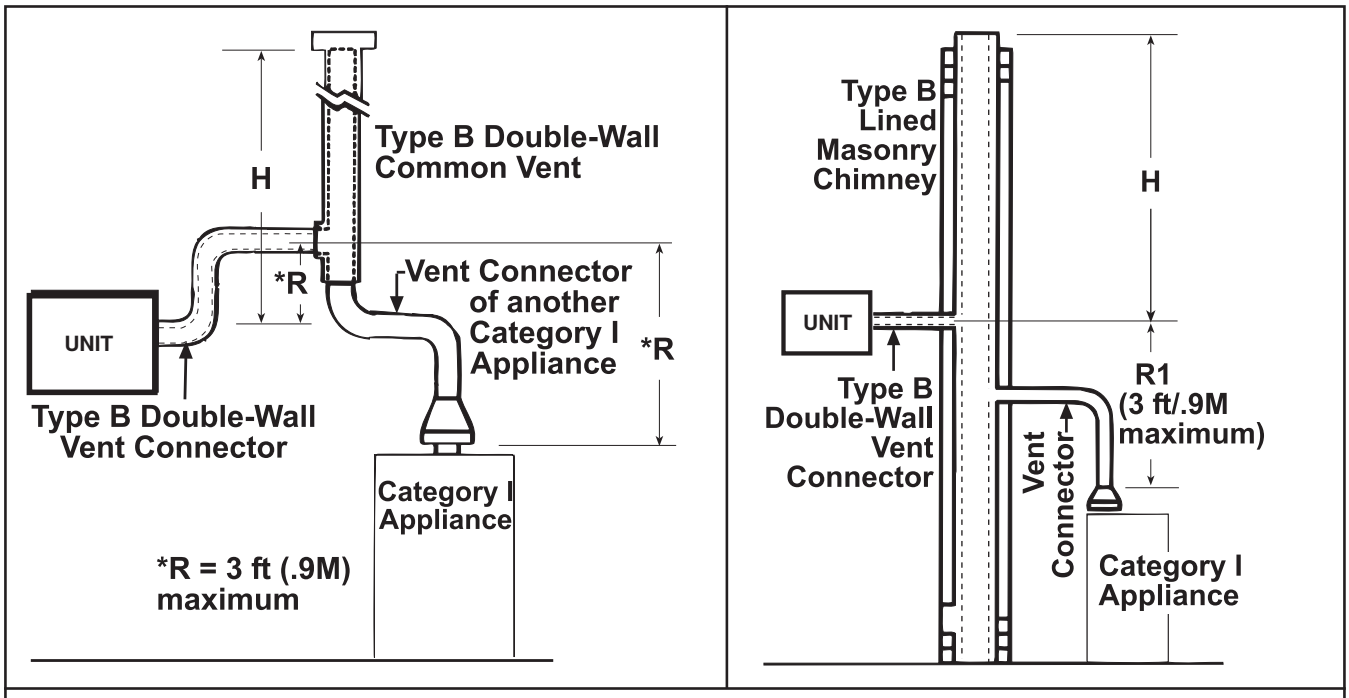


H = COMMON VENT HEIGHT = VERTICAL DISTANCE FROM HIGHEST DRAFT HOOD OUTLET OR FLUE COLLAR TO VENT CAP OR CHIMNEY OUTLET OF COMMON VENT

R = VENT CONNECTOR RISE = VERTICAL DISTANCE FROM EACH HEATER OR APPLIANCE OUTLET TO CENTER LINE WHERE VENT GAS STREAMS COME TOGETHER (3 FEET (0.9 METER) MAXIMUM)

VENT CONNECTOR = HORIZONTAL LENGTH OF VENT PIPE BETWEEN EACH APPLIANCE AND VERTICAL COMMON VENT

**Figure 14. Typical Category I Common Vertical Vent**

**Table 16. Category I Common Vertical Vent Capacity**

| Appliance Types Sharing Common Vertical Vent | Vent Diameter (Inches (mm))* | Vent Height (Feet (Meters)) | | | | | | |
|---|---|---|---|---|---|---|---|---|
| | | 6 (1.8) | 7 (2.1) | 8 (2.4) | 10 (3.0) | 15 (4.6) | 20 (6.1) | 30 (9.1) |
| | | Maximum Combined Input Rating of Appliances (MBTUh) | | | | | | |
| Two fan-assisted appliances | 5 (127) | — | | 147 | 170 | 187 | 212 | 241 |
| | 6 (152) | 180 | 188 | 196 | 213 | 248 | 275 | 315 |
| | 7 (178) | 274 | 286 | 298 | 321 | 374 | 417 | 480 |
| One fan-assisted appliance and one non-fan-assisted appliance** | 5 (127) | 102 | 108 | 113 | 123 | 143 | 159 | 182 |
| | 6 (152) | 142 | 149 | 156 | 170 | 199 | 222 | 257 |
| | 7 (178) | 220 | 231 | 242 | 263 | 309 | 345 | 401 |

*Type B double-wall vent pipe.

**Non-fan-assisted appliances rely solely on the natural buoyancy of the vent gases for venting.

## Vent System Installation Procedures—Continued

### *Category I Residential Installations with Common Vent (Model UDXC)—Continued*

**Table 17. Maximum Length of Category I Horizontal Connector Pipe**

| Vertical Vent Height (Feet (Meters)) | With Single-Wall Connector | | | | | With Double-Wall Connector | | | | |
|---|---|---|---|---|---|---|---|---|---|---|
| | Unit Size (MBTUh) | | | | | | | | | |
| | 30 | 45 | 60 | 75 | 100 | 30 | 45 | 60 | 75 | 100 |
| | Vent Connector Diameter (Inches (mm)) | | | | | | | | | |
| | 4 (102) | | | | 5 (127) | 4 (102) | | | | 5 (127) |
| | Pipe Length (Feet (Meters)) | | | | | | | | | |
| 6 (1.8) | 0 (0) | | 2 (0.6) | 3 (0.9) | | 2 (0.6) | | | | 3 (0.9) |
| 7 (2.1) | 2 (0.6) | | | 3 (0.9) | | 3 (0.9) | | | | 4 (1.2) |
| 8 (2.4) | 3 (0.9) | | | | | 4 (1.2) | | | | 5 (1.5) |
| 10 (3.0) | 3 (0.9) | 4 (1.2) | | | | 5 (1.5) | | | | 6 (1.8) |
| 15 (4.6) | 3 (0.9) | 4 (1.2) | 5 (1.5) | | 6 (1.8) | 5 (1.5) | | 6 (1.8) | | 7.5 (2.3) |
| 20 (6.1) | 3 (0.9) | 4 (1.2) | 5 (1.5) | | 6 (1.8) | 5 (1.5) | 6 (1.8) | | | 7.5 (2.3) |
| 30 (9.1) | 3 (0.9) | 4 (1.2) | 5 (1.5) | | 6 (1.8) | 5 (1.5) | 6 (1.8) | | | 7.5 (2.3) |

NOTE: For the proper vent connector length and diameter of other appliances connected in common with the unit, refer to the appliance manufacturer's instructions or to the *National Fuel Gas Code*.

### *Category III Commercial/Industrial Installations*

A commercial/industrial installation may have either a horizontal or a vertical vent run. Install the vent as follows:

1. Select vent pipe (refer to **Table 10**)—following types are acceptable:
   a. If at least 75% of equivalent length of vent run **IS** vertical:
      (1) Double-wall Type B vent pipe.
      (2) Vent pipe approved to UL standard 1738 for Category III appliances.
      (3) Appropriately-sealed 26-gauge (minimum) galvanized or equivalent steel single-wall pipe.
   b. If at least 75% of equivalent length of vent run **IS NOT** vertical:
      (1) Vent pipe approved to UL standard 1738 for Category III appliances.
      (2) Appropriately-sealed 26-gauge (minimum) galvanized or equivalent steel single-wall pipe.
2. If connecting double-wall pipe to heater, follow instructions in **Figure 11**.
3. Determine vent pipe diameter and length. Minimum vent length is 3 feet (1 meter). Use only one diameter of vent pipe for installation (refer to **Table 11**).
4. Determine venter (flue) outlet diameter (refer to **Venter (Flue) Outlet Diameter** section).
5. Make all vent pipe joint connections in accordance with **Vent System Sealing Requirements** section.
6. Properly support all vent pipe runs in accordance with **Vent System Support Requirements** section.
7. Take appropriate steps to mitigate condensation in accordance with **Condensation Mitigation Requirements** section.
8. Terminate vent as follows:
   a. If using single wall metal pipe or double-wall Type B vent pipe:
      (1) Install double-wall Type B terminal vent pipe (connect in accordance with **Figure 11**) and terminate vent with option CC1 or CC21 vent cap or approved Category III vent cap.
      (2) Refer to instructions shown in **Figure 15** to install horizontal vent terminal.
      (3) Refer to instructions shown in **Figure 16** to install vertical vent terminal.
      (4) Ensure that vent terminal is installed in accordance with **Vent Terminal Requirements** section.
   b. If using vent pipe approved to UL standard 1738 for Category III appliances, install the Category III vent system in accordance with manufacturer's instructions. Ensure that required distances shown in **Figure 15**, **Figure 16**, and **Vent Terminal Requirements** section are implemented.

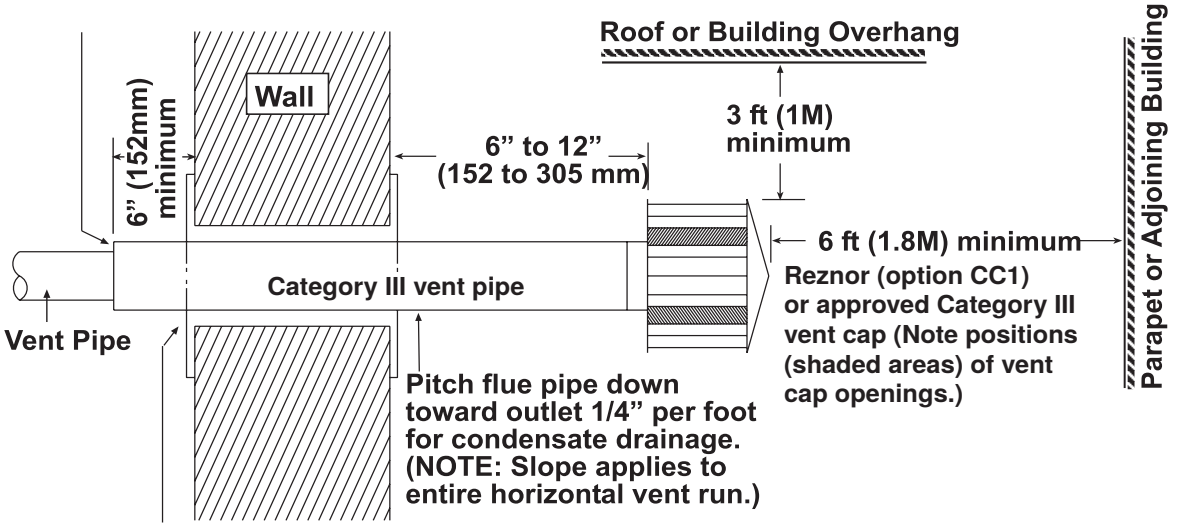


**Approved clearance thimble is required when flue pipe extends through combustible materials. Follow the requirements of the thimble and/or the vent pipe manufacturer.**

**Figure 15. Horizontal Vent Terminal (Commercial/Industrial Installations)**

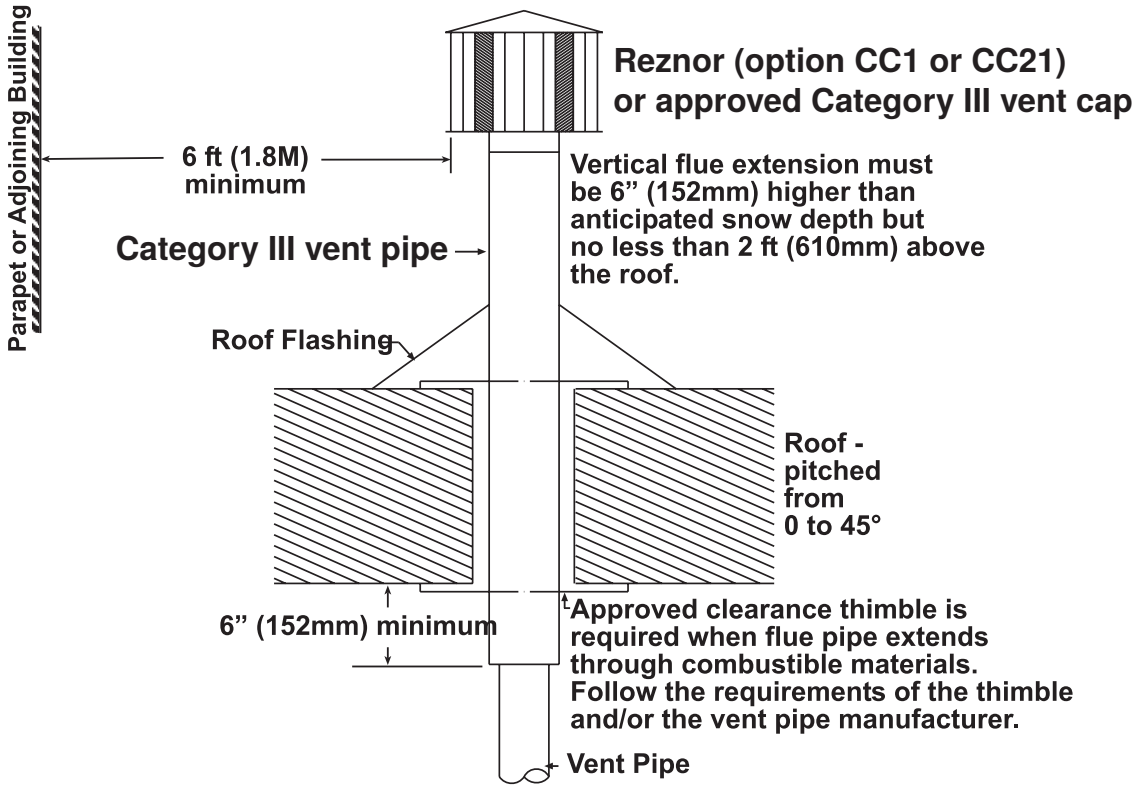


**Figure 16. Vertical Vent Terminal (Commercial/Industrial Installations)**

## Vent System Installation Procedures—Continued

### *Category III Residential Installations (Model UDXC)*

Residential installations of model UDXC unit sizes 30–100 may use a Category III dedicated vent as defined by the *National Fuel Gas Code* (ANSI Z223.1) or the *Installation Code for Gas Burning Appliances and Equipment* (CSA B149.1). Some venting requirements will vary depending on whether the vent is horizontal or vertical. Install the vent as follows:

1. Select vent pipe (refer to **Table 10**) approved to UL standard 1738 for Category III appliance for either horizontal or vertical vent run.
2. Determine vent pipe diameter and length. Minimum vent length is 3 feet (1 meter). Use only one diameter of vent pipe for installation (refer to **Table 11**).
3. Make all vent pipe joint connections in accordance with **Vent System Sealing Requirements** section.
4. Properly support all vent pipe runs in accordance with **Vent System Support Requirements** section.
5. Take appropriate steps to mitigate condensation in accordance with **Condensation Mitigation Requirements** section.
6. Terminate vent as follows:
   a. Install UL standard 1738 approved Category III vent pipe and terminate vent with option CC1 or CC21 vent cap or approved Category III vent cap.
   b. Refer to instructions shown in **Figure 17** and to **Table 13** to install horizontal vent terminal.
   c. Refer to instructions shown in **Figure 18** to install vertical vent terminal.
   d. Ensure that vent terminal is installed in accordance with **Vent Terminal Requirements** section.

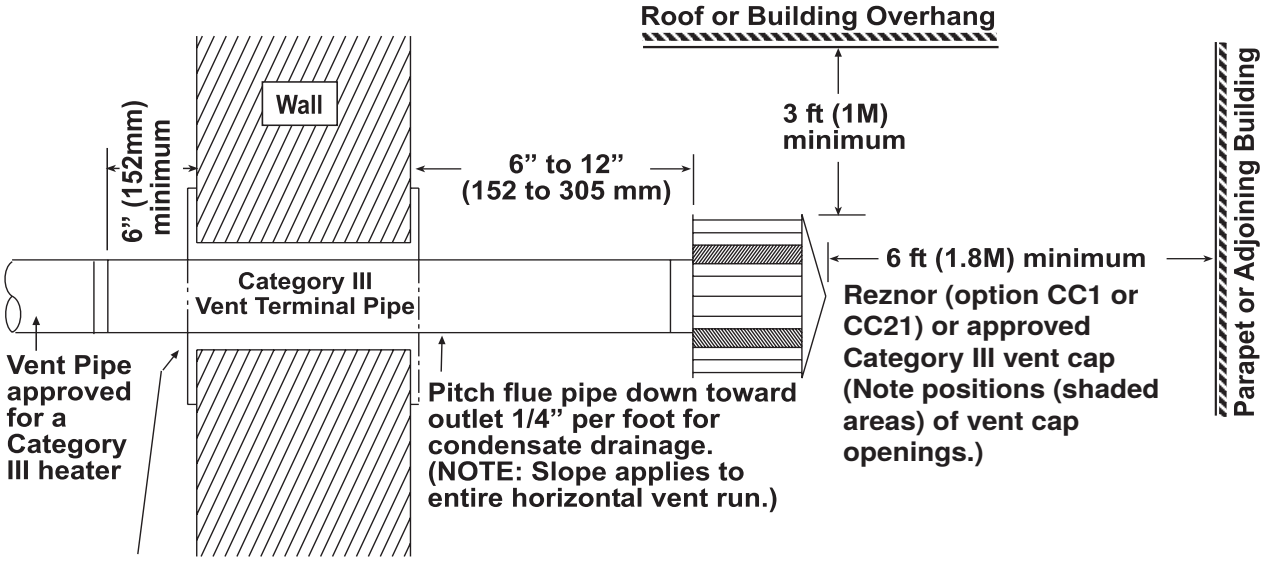


**Approved clearance thimble is required when the flue pipe extends through combustible materials. Follow the requirements of the thimble and/or Category III vent pipe manufacturer.**

**Figure 17. Horizontal Vent Terminal (Residential Installations)**

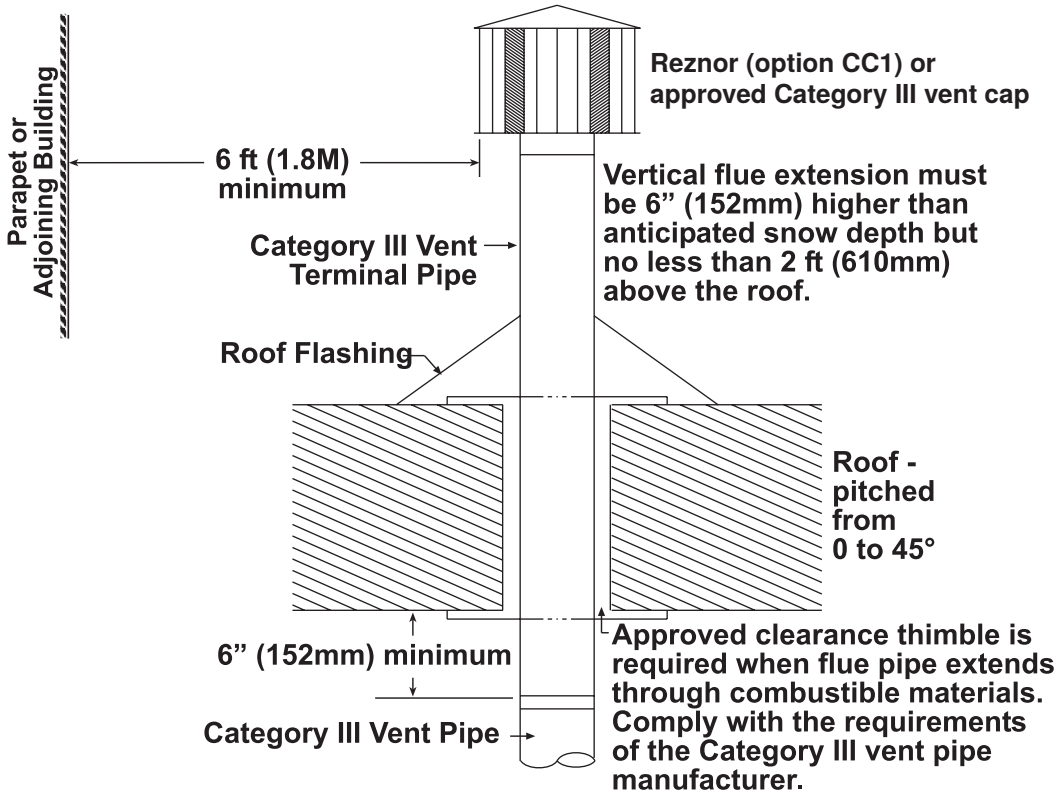


**Figure 18. Vertical Vent Terminal (Residential Installations)**

## CONTROLS

**NOTE: Refer to the TROUBLESHOOTING section for probable causes and reset instructions for the following controls.**

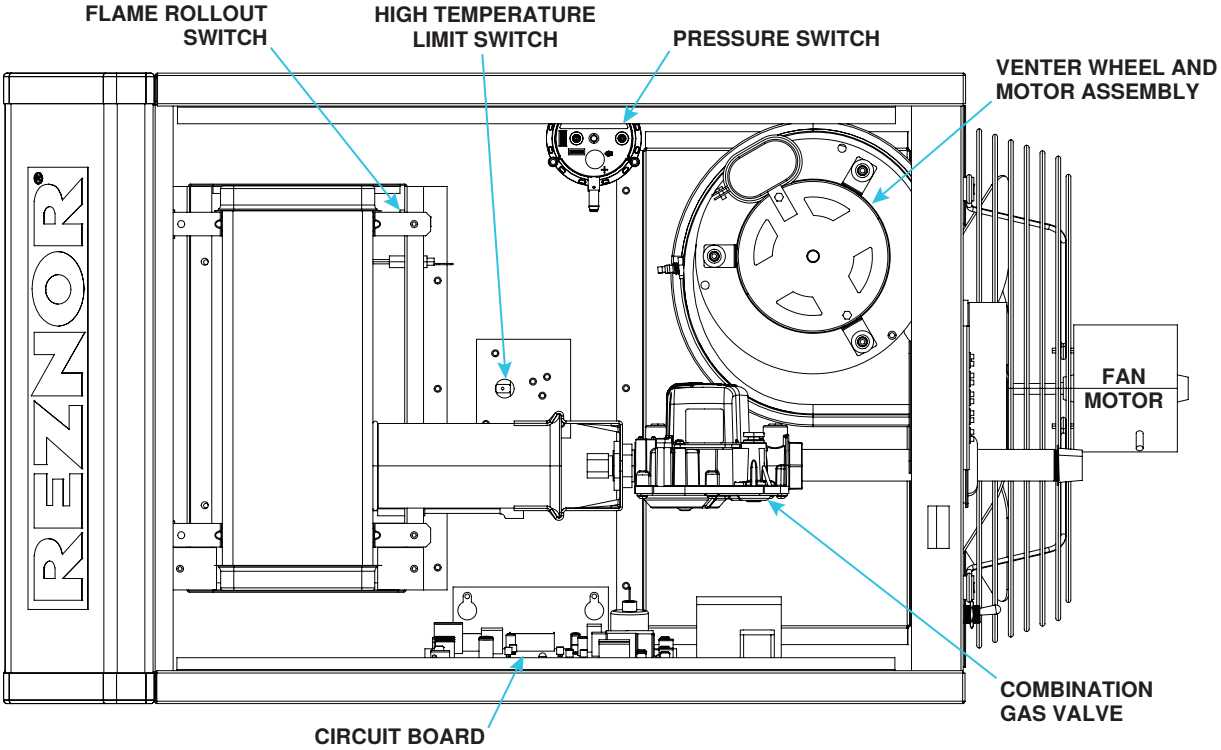


**Figure 19. Control Locations (Typical)**

## Pressure Switch

**⚠ DANGER ⚠**

**Safe operation of this unit requires proper venting flow. NEVER bypass the pressure switch or attempt to operate the unit without the venter running and the proper flow in the vent system. Hazardous conditions could result.**

- The pressure (combustion air proving) switch (see **Figure 19**) is a pressure-sensitive switch that monitors air pressure to ensure that proper combustion airflow is available.
- On standard units, the pressure switch is a single-pole/normally-open device that closes when a negative pressure (refer to **Table 18**) is sensed in the venter housing. On separated-combustion units, the pressure switch senses the differential pressure (refer to the separated-combustion conversion instructions provided with the conversion kit) between the negative pressure in the venter housing and the pressure in the cabinet.
- At startup when the heater is cold, the sensing pressure is at the most negative level, and as the heater and flue system warm up, the sensing pressure becomes less negative. After the system has reached equilibrium (about 20 minutes), the sensing pressure levels off.
- If a restriction or excessive flue length/turns cause the sensing pressure to be outside the pressure switch setpoint, the switch will function to shut off the main burner. The main burner will remain off until the system has cooled and/or the flue system resistance is reduced.

**Table 18. Pressure Switch Settings For Standard Units**

| Unit Size (MBTUh) | Model | | | | | | | |
|---|---|---|---|---|---|---|---|---|
| | UBXC | | | | UDXC | | | |
| | Startup Cold | Equilibrium Hot | Setpoint OFF | Setpoint ON | Startup Cold | Equilibrium Hot | Setpoint OFF | Setpoint ON |
| | Negative Pressure (IN WC) | | | | | | | |
| 30 | 1.20 | 0.90 | 0.50 | 0.70 | 1.20 | 0.90 | 0.65 | 0.80 |
| 45 | 1.00 | 0.80 | 0.45 | 0.65 | 1.00 | 0.80 | 0.50 | 0.65 |
| 60 | 0.90 | 0.80 | 0.60 | 0.80 | 0.90 | 0.80 | 0.40 | 0.55 |
| 75 | 0.80 | 0.70 | 0.50 | 0.70 | 0.80 | 0.70 | 0.45 | 0.60 |
| 100 | 0.90 | 0.70 | 0.45 | 0.65 | 0.90 | 0.70 | 0.50 | 0.65 |
| 125 | 1.40 | 1.00 | 0.60 | 0.80 | 1.40 | 1.00 | 0.80 | 0.95 |
| 150 | 0.70 | 0.60 | 0.40 | 0.60 | 0.70 | 0.60 | 0.35 | 0.50 |
| 175 | 2.30 | 1.40 | 1.10 | 1.30 | 0.80 | 0.70 | 0.40 | 0.55 |
| 200, 225 | 2.30 | 1.60 | 1.10 | 1.30 | 2.30 | 1.60 | 1.10 | 1.30 |
| 250 | 2.70 | 1.80 | 1.30 | 1.50 | 2.70 | 1.80 | 1.10 | 1.30 |
| 300 | 2.50 | 1.90 | 1.30 | 1.50 | 2.50 | 1.90 | 1.10 | 1.30 |
| 350, 400 | 2.10 | 1.60 | 1.30 | 1.50 | 2.10 | 1.60 | 1.30 | 1.50 |

## High Temperature Limit Switch

**⚠ WARNING ⚠**

**The automatic-reset high temperature limit switch will continue to shut down the heater until the cause is corrected. Never bypass this switch as hazardous conditions could result.**

All units are equipped with a temperature-activated, automatic-reset high temperature limit switch (see **Figure 19**). The switch is factory-set and is non-adjustable. If the setpoint is reached, the switch interrupts the electric supply to the combination gas valve. This safety device provides protection in the case of motor failure or lack of airflow due to a restriction at the inlet or outlet.

### Venter Wheel and Motor Assembly

The venter motor is assembled to the venter wheel (see **Figure 19**) and operates to provide combustion airflow. Operation is controlled by the circuit board (refer to **Circuit Board (DSI Control Module)** section).

### Flame Rollout Switch (Model UDXC, Unit Sizes 30–125)

**⚠ DANGER ⚠**

**If the manual-reset flame rollout switch activates, identify and correct the cause before resetting the switch. Never bypass the flame rollout switch; hazardous conditions could result.**

Unit sizes 30–125 of model UDXC are equipped with a temperature-activated, manually-reset flame rollout switch (see **Figure 19**). The switch, located behind the top burner body support, is factory-set and is non-adjustable. If the setpoint is reached, the switch interrupts the electric supply to the gas valve. If the flame rollout switch activates, identify and correct the cause before resetting the switch.

### Combination Gas Valve

**⚠ WARNING ⚠**

**The combination gas valve is the prime safety shutoff. All gas supply lines must be free of dirt or scale before connecting them to the unit to ensure positive closure.**

The combination gas valve (see **Figure 19**) is powered by the 24V control circuit through the thermostat and safety controls. The diaphragm-type valve is pre-set at the factory and provides regulated gas flow.

### Fan Motor (Model UDXC)

The fan motor (see **Figure 19**) is equipped with automatic-reset thermal overload protection. If the motor does not run, the cause may be due to improper current. Ensure that the correct voltage is available at the motor.

**NOTE: If the unit is equipped with an optional, totally-enclosed motor or optional voltage, the motor's horsepower may be greater than the standard motor. Refer to the motor's nameplate to verify its horsepower.**

### Thermostat

**NOTE: IMPORTANT: all units MUST be operated by a 24V thermostat. Never use a line voltage disconnect switch as a means of operating the heater. The operation of unit sizes 30–125 by means other than by a 24V thermostat may result in the flame rollout switch tripping. For all availaible thermostat and thermostat accessory options, contact an authorized Factory Distributor.**

The unit may be controlled by a thermostat—either an optional thermostat (refer to **Table 7**) or a field-supplied 24V thermostat that must be field-installed in accordance with the thermostat manufacturer's instructions. Pay particular attention to the requirements regarding the location of the thermostat. In accordance with the wiring diagram provided with the unit, connect the thermostat at the 24V control wiring terminal strip on the back of the unit (refer to **Control Connections** section).

## CONTROLS—CONTINUED

### Circuit Board (DSI Control Module)

The heater's ignition system is controlled by a circuit board (see **Figure 19**), a Direct-Spark Integrated (DSI) control module (see **Figure 10**), that monitors the safety devices and controls the operation of the fan and venter motors and the combination gas valve between heat cycles. The module's Seven-Segment Display (SSD) is visible through a viewport on the access door panel. In addition, there is a status LED on the bottom of the heater. Its status indications are **off** (heater is not powered or control board fault), **steady on** (heater is on with no faults), or **flashing** (heater is on with fault(s)). Additional status indications appear on the display at the bottom of the control module (labeled as DSP1, see **Figure 10**). The display's codes are listed and described in the **Unit Troubleshooting Using DSI Control Module** section.

### Multiple Heater Control

If the heater was ordered with a multiple heater control option, one thermostat can be used to control up to five heaters. This option includes a 40VA transformer that replaces the standard transformer in the control unit and a relay assembly that attaches to the additional unit. Option CL31 provides for control of two heaters. If control of additional heaters is desired (up to five total), option CL32, which is the relay assembly only, must be added to each additional heater. The option packages are shipped separately and include complete instructions on installation and wiring.

## OPERATION

**⚠ DANGER ⚠**

- **For your safety, read before operating. If you do not follow these instructions exactly, a fire or explosion may result, causing property damage, personal injury, or loss of life.**
- **This appliance does not have a pilot. It is equipped with an ignition device which automatically lights the burner. Do not try to light the burner by hand.**
- **Before operating, smell all around the appliance area for gas. Be sure to smell next to the floor because some gas is heavier than air and will settle on the floor.**
- **WHAT TO DO IF YOU SMELL GAS:**
  - **a. Do not try to light any appliance.**
  - **b. Do not touch any electrical switch; do not use any phone in your building.**
  - **c. Leave the building immediately.**
  - **d. Immediately call your gas supplier from a phone remote from the building. Follow the gas supplier's instructions.**
  - **e. If you cannot reach your gas supplier, call your fire department.**
- **Use only your hand to turn the gas control ON/OFF knob on the gas valve. Never use tools. If the valve ON/OFF knob will not turn by hand, do not try to repair it. Call a qualified service technician. Force or attempted repair may result in a fire or explosion.**
- **Should overheating occur, or the gas supply control system fail to shut off the flow of gas, turn off the manual gas valve to the appliance before shutting off the electrical supply.**
- **Do not use this appliance if any part has been under water. Immediately call a qualified service technician to inspect the appliance and to replace any part of the control system and any gas control which has been under water.**
- **All components of a gas supply system must be leak tested prior to placing equipment in service. NEVER TEST FOR LEAKS WITH AN OPEN FLAME. Failure to comply could result in personal injury, property damage, or death.**

## Pre-Startup Checklist

Check the following ***before*** startup:

- ❑ Check to ensure that all screws used to secure shipping brackets have been re-installed in heater cabinet.
- ❑ Check suspension—unit must be secure and level.
- ❑ Check to ensure that clearances from combustibles are in accordance with **Table 1**.
- ❑ Check vent system to ensure that it is installed in accordance with venting instructions.
- ❑ Check piping for leaks and proper gas line pressure and bleed trapped air from gas lines (refer to **Supply Piping Connections** section).
- ❑ Check electrical wiring—ensure that all wire gauges are as recommended—service disconnect switch should be used—verify that fusing or circuit breakers are adequate for load use.
- ❑ Check polarity—verify that line voltage exists between black L1 wire and earth ground.
- ❑ If installation elevation is >6,000 feet (>1,830 meters), replace pressure switch in accordance with **Pressure Switch Replacement** section.

## Startup

Start up the heater as follows:

1. Set thermostat at lowest setting.
2. Turn OFF all electric power to appliance.

**NOTE: This appliance is equipped with an ignition device that automatically lights the burner. Do not try to light the burner by hand.**

3. Open access door and locate gas control (ON/OFF) knob or switch on gas valve (see **Figure 20**).

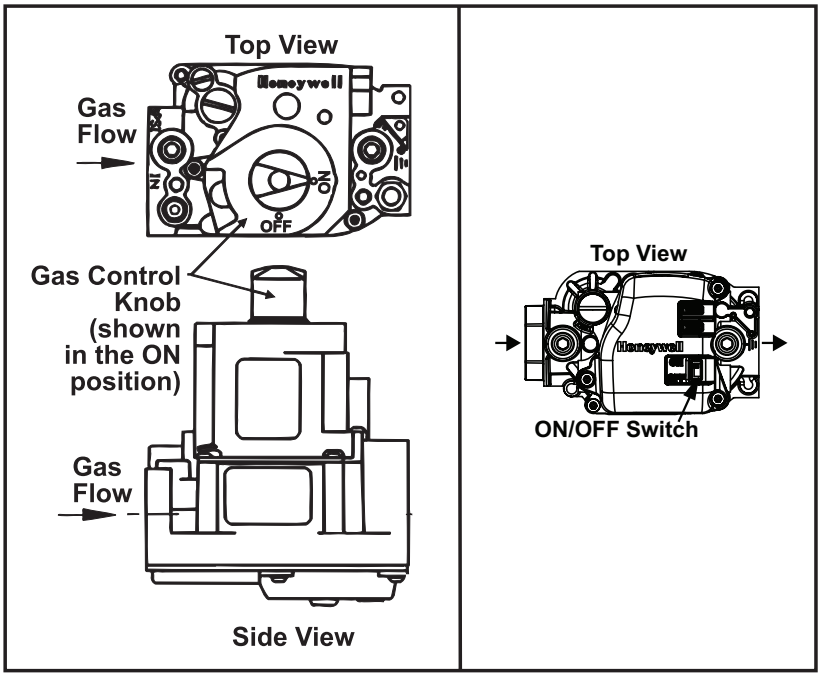


**Figure 20. Gas Valve ON/OFF Control**

4. Turn gas control switch to OFF or turn knob clockwise to OFF.
5. Wait 5 minutes to clear out any gas and then smell for gas (including near floor).
   a. If you smell gas, STOP! and follow steps in DANGER message listed above or on heater operating label.
   b. If you do not smell gas, proceed to step 6.

## Startup—Continued

6. Turn gas control switch to ON or turn knob counterclockwise to ON.
7. Close access door.
8. Turn ON electric power to heater.
9. Set thermostat to desired setting.
   a. If heater does not operate, follow instructions in step 13 or on heater operating label and call your service technician.
   b. If heater operates, thermostat calls for heat, which energizes venter motor.
10. Pressure switch closes, which fires unit.
11. Burner flame is sensed and in 30 seconds after combination gas valve is energized, fan motor is energized.
12. If flame is extinguished during main burner operation, integrated control system closes main valve and must be reset by interrupting power to control circuit (refer to lighting instructions provided with heater).
13. TO TURN OFF GAS TO APPLIANCE:
   a. Set thermostat to lowest setting.
   b. If service is to be performed, turn off all electric power to appliance.
   c. Open the access door.
   d. Turn gas control switch to OFF or turn knob clockwise to OFF (do not force).
   e. Close access door.

## Operating Sequences

The following tables list the heater's operating sequence. Refer to **Table 25** for LED indications.

**Table 19. Operating Sequence (Normal Heat Cycle)**

| Step | Condition | Action |
|---|---|---|
| 1. Call for heat | Terminal W is energized | Thermostat calls for heat by energizing terminal W |
| | | Control determines whether limit switch is open or closed and if pressure switch is open |
| | Limit switch is open | Control deenergizes gas valve, turns fan/blower motor onto heat speed, and runs venter motor |
| | | SSD displays "5" |
| | | Control is in soft lockout "L" before returning to normal operation |
| | Pressure switch is closed | SSD displays "4" |
| | | Control waits indefinitely for pressure switch to open |
| | Pressure switch is open | Control proceeds to step 2 |
| 2. Prepurge | Venter motor is energized | Control waits for pressure switch to close |
| | Pressure switch not closed within 30 seconds of venter motor energizing | SSD displays "3" |
| | | Control maintains venter motor energized indefinitely as long as call for heat remains and pressure switch is open |
| | Pressure switch is proven closed | Control begins prepurge |
| | Flame is present at any time during prepurge | Prepurge is restarted |
| | Flame is present long enough to cause lockout | Control runs venter motor and runs fan/blower motor on heat speed |
| | | When flame is no longer sensed, venter motor runs through post-purge and fan/blower motor runs through selected delay OFF time |
| | | Control proceeds to soft lockout but still responds to open limit and flame |
| | | SSD displays "6" when lockout is due to undesired flame |
| | Venter motor runs for 20-second prepurge time | Control proceeds to step 3 |

| Table 19. Operating Sequence (Normal Heat Cycle)—Continued | | |
|---|---|---|
| **Step** | **Condition** | **Action** |
| 3. Ignition trial period | Spark and main gas valve are energized | Venter remains energized |
| | Flame is sensed during first 16 seconds | Control deenergizes spark and proceeds to heat fan/blower on delay |
| | Flame is not sensed during first 16 seconds | Control deenergizes spark and maintains gas valve energized for additional 1-second flame-proving period |
| | Flame is not present after flame-proving period | Control deenergizes gas valve and proceeds with ignition retries as specified in **Table 20**: abnormal function ***Ignition Retry*** |
| | Flame is present after flame-proving period | Control proceeds to step 4 |
| 4. Fan/blower ON delay | 30 seconds after gas valve has opened | Control energizes fan/blower motor |
| | Gas valve and venter motor remain energized | Control proceeds to step 5 |
| 5. Steady heat | Limit switch is closed | Control continuously monitors inputs |
| | Pressure switch is closed | |
| | Flame is established | |
| | Thermostat call for heat remains | |
| | Thermostat call for heat is removed | Control deenergizes gas valve and proceeds to steps 6 and 7 |
| 6. Post-purge | Thermostat is satisfied | Venter motor remains on for 45-second post-purge period |
| 7. Fan/blower OFF delay | | Fan/blower motor is deenergized after selected fan/blower OFF delay |

| Table 20. Operating Sequence (Abnormal Heat Cycle) | | |
|---|---|---|
| **Abnormal Function** | **Condition** | **Action** |
| Interrupted thermostat call for heat | Thermostat demand for heat is removed before flame is recognized | Control runs venter motor for post-purge period |
| | | All outputs are deenergized |
| | Thermostat demand for heat is removed after successful ignition | Control deenergizes gas valve |
| | | Control runs venter motor through post-purge period |
| | | Control runs fan/blower motor on heat speed for selected delay OFF time |
| Ignition retry | Flame is not established on first trial for ignition period | Control deenergizes gas valve |
| | | Venter motor remains energized for 10-second inter-purge period |
| | | Spark and gas valve are re-energized |
| | | Control initiates another trial for ignition |
| | Flame is not established on second trial for ignition | Control deenergizes gas valve |
| | | Control runs fan/blower motor on heat speed |
| | | Venter motor remains energized |
| | | Fan/blower motor deenergizes after selected delay OFF period and spark and gas valve are re-energized |
| | | Control initiates another trial for ignition (this fan delay is self-healing feature for open auxiliary limit switch) |
| | Flame is not established on third trial for ignition | Control deenergizes gas valve |
| | | Venter motor remains energized for 10-second inter-purge period |
| | | Spark and gas valve are re-energized |
| | | Control initiates another trial for ignition |
| | Flame is not established on fourth trial for ignition (initial try plus three re-tries) | Control deenergizes gas valve and proceeds to lockout |
| | | SSD displays “L” to indicate ignition failure lockout |
| Limit switch operation | Limit switch is open and call for heat is present (switch is ignored unless call for heat (terminal W energized) is present) | Control deenergizes gas valve |
| | | Control runs venter motor and runs fan/blower motor on heat speed |
| | | Control is in soft lockout (SSD displays “L”) before returning to normal operation |
| | Limit switch re-closes or call for heat is not present | Control runs venter motor through post-purge period |
| | | Control runs fan/blower motor on heat speed through selected delay OFF period |

## Operating Sequences—Continued

**Table 20. Operating Sequence (Abnormal Heat Cycle)—Continued**

| Abnormal Function | Condition | Action |
|---|---|---|
| Pressure switch operation | Pressure switch opens before trial for ignition period | Venter motor runs through 2-second pressure switch recognition delay |
| | | Control deenergizes gas valve |
| | | Control runs venter motor through post-purge period |
| | | Control restarts heat cycle at pressure switch proving state if call for heat still exists |
| | Pressure switch opens for less than 2 seconds during trial for ignition period (shall not interrupt heat cycle) | Control deenergizes gas valve while pressure switch is open |
| | Pressure switch opens after successful ignition | Control deenergizes gas valve |
| | Flame is lost before end of 2-second pressure switch recognition delay | Control responds to loss of flame |
| | Pressure switch remains open for 2 seconds and flame remains | Control deenergizes gas valve |
| | | Control runs venter motor through post-purge period |
| | | Control runs fan/blower motor on heat speed through selected delay OFF period |
| | | When fan OFF delay ends, fan/blower motor is deenergized, and heat cycle begins if call for heat still exists |
| Continuous fan operation | Thermostat calls for continuous fan (G) without call for heat | Fan motor is energized after 0.25-second delay (this brief ON delay allows terminal G to energize slightly before terminal Y and allows external changeover relay to switch from terminal G to terminal W without causing momentary glitches in fan/blower output |
| | | Fan remains energized as long as call for fan remains without call for heat |
| | Thermostat calls for heat (W) during continuous fan operation | Fan/blower is deenergized |
| | | Call for fan is ignored during lockout |

**Table 21. Fault Modes**

| Fault Mode | Condition | Action |
|---|---|---|
| Undesired flame | Flame is sensed longer than 20 seconds while gas valve is deenergized | Control runs venter motor and runs fan/blower motor on heat speed |
| | | When flame is no longer sensed, venter motor runs through post-purge and fan/blower motor runs through selected delay OFF time |
| | | Control proceeds to soft lockout but still responds to open limit and flame |
| | | SSD displays “6” when lockout is due to undesired flame |
| Gas valve relay fault | Control senses that gas valve is energized for more than 1 second when control is not attempting to energize gas valve or control senses that gas valve is not energized when it is supposed to be energized | Control proceeds to lockout (SSD is blank) |
| | | Control assumes either that contacts of relay driving gas valve have welded shut or that sensing circuit has failed |
| | | Venter motor is forced OFF to open pressure switch to stop gas flow unless flame is present |
| | Control senses that gas valve is closed when it should be open (has not deenergized after venter motor has been shut off for 15 seconds | Venter motor is re-energized to vent unburned gas |
| Soft lockout | Control does not initiate call for heat or call for continuous fan operation while in lockout | Control still responds to open limit and undesired flame |
| | | Lockout is automatically reset after 1 hour |
| | | Lockout may be manually reset by removing power from control for more than 1 second or by removing thermostat call for heat for more than 1 but less than 20 seconds |
| Hard lockout | Control detects fault on control board | SSD is blank or displays “L” (fault dependent) |
| | | Control remains in lockout as long as fault remains |
| | | Hard lockout automatically resets when hardware fault clears |
| Power interruption | Momentary interruption or voltage level is below minimum operating voltage (line voltage or low voltage) | System self-recovers without lockout when voltage returns to operating range |
| | Interruption <80 milliseconds | Control does not change operating state |
| | Interruption >80 milliseconds | Control may interrupt current operating cycle to restart |

### Vent System Testing

For each heater or utility heater connected to the venting system and placed in operation while any other appliance(s) connected to the venting system(s) is not in operation, test the vent system as follows:

1. Seal unused openings(s) in vent system.
2. Inspect vent system for proper size and horizontal pitch as required in *National Flue Gas Code* (ANSI Z223.1/NFPA 54) or *Natural Gas and Propane Installation Code* (CSA B149.1) and in venting instructions.
3. Verify that there is no blockage or restriction, leakage, corrosion, and/or other deficiencies that could cause any unsafe condition.
4. In so far as is practical, close all doors, windows, and other open spaces within building and all doors between space in which appliance(s) is connected and space where vent system is located.
5. Close any fireplace dampers.
6. Turn on clothes dryers and any exhaust fans (such as range hoods and bathroom exhausts) so that they operate at maximum speed. Do not operate a summer exhaust fan.
7. Following lighting instructions provided with heater, place heater being inspected in operation. Adjust thermostat so that heater will operate continuously.
8. After it has been determined that each heater connected to vent system properly vents when tested as outlined above, return doors, windows, exhaust fans, fireplace dampers, and any other gas-burning appliance to their previous condition of use.
9. If improper venting is observed during above tests, vent system must be corrected.

### Post-Startup Checklist

Check the following ***after*** startup:

- ❑ Ensure that vent system has been tested in accordance with **Vent System Testing** section.
- ❑ With unit in operation, measure manifold (outlet) gas pressure in accordance with **Measure and Adjust Manifold (Outlet) Gas Pressure** section.
- ❑ Turn unit OFF and ON, pausing 2 minutes between each cycle; observe for smooth ignition.
- ❑ Place literature bag that contains Limited Warranty, this manual, and any control or optional information in accessible location near heater.

## ⚠ DANGER ⚠

- **The gas burner in this gas-fired equipment is designed and equipped to provide safe controlled complete combustion. However, if the installation does not permit the burner to receive the proper supply of combustion air, complete combustion may not occur. The result is incomplete combustion, which produces carbon monoxide, a poisonous gas that can cause death. Safe operation of indirect-fired gas burning equipment requires a properly operating vent system that vents all flue products to the outside atmosphere. FAILURE TO PROVIDE PROPER VENTING WILL RESULT IN A HEALTH HAZARD THAT COULD CAUSE SERIOUS PERSONAL INJURY OR DEATH.**
- **Always comply with the combustion air requirements listed in the installation codes and in this manual. Combustion air at the burner should be regulated only by manufacturer-provided equipment. NEVER RESTRICT OR OTHERWISE ALTER THE SUPPLY OF COMBUSTION AIR TO ANY HEATER. Heaters installed in a confined space must be supplied with air for combustion as required by code and the requirements listed in this manual. MAINTAIN THE VENT OR VENT/COMBUSTION AIR SYSTEM IN STRUCTURALLY SOUND AND PROPER OPERATING CONDITION.**

**Post-Startup Checklist—Continued**

## ⚠ CAUTION ⚠

**IMPORTANT FOR MODEL UBXC: After at least 8 hours but not longer than 1 week of operation, check the blower wheel, all setscrews, blower pulley, motor pulley, and belt tension. Adjust as necessary.**

## ADJUSTMENTS

**NOTE: Gas conversion kits are available for changing from propane to natural gas or natural gas to propane. A factory-authorized conversion kit MUST BE used.**

After startup, the combination gas valve outlet pressure must be measured and adjusted if necessary in accordance with the **Measure and Adjust Manifold (Outlet) Gas Pressure** section. If the heater is being installed at an elevation of >6,000 feet (>1,830 meters), the pressure switch must be replaced in accordance with the **Pressure Switch Replacement** section before the gas pressure is adjusted.

### Measure and Adjust Manifold (Outlet) Gas Pressure

- **For natural gas:** when the heater leaves the factory, the combination gas valve is set so that the valve outlet gas pressure for a single-stage valve or high fire of a two-stage valve is regulated to 3.5 IN WC. Low fire on a two-stage valve is set to 1.8 IN WC. Inlet supply pressure to the valve for natural gas must be a minimum of 5 IN WC or as noted on the rating plate and a maximum of 14 IN WC.
- **For propane:** when the heater leaves the factory, the combination gas valve is set so that the valve outlet gas pressure for a single-stage valve or high fire of a two-stage valve is regulated to 10 IN WC. Low fire on a two-stage valve is set to 5.0 IN WC. Inlet supply pressure to the valve for propane must be a minimum of 11 IN WC and a maximum of 14 IN WC.

During normal operation at sea level, adjustment to the factory-setting should not be necessary. Measuring outlet pressure cannot be done until the heater is in operation. Measure and adjust the manifold (outlet) gas pressure as follows:

## ⚠ WARNING ⚠

**Valve outlet gas pressure must never exceed 3.5 IN WC for natural gas or 10 IN WC for propane. The maximum inlet supply pressure for natural gas or propane is 14 IN WC. Maximum gas pressure can never be exceded either during operation or when unit is static (with lock-up regulator).**

## ⚠ CAUTION ⚠

**Before attempting to measure or adjust valve outlet gas pressure, the inlet supply pressure must be within the specified range, both when the heater is in operation and when it is on standby. Incorrect inlet pressure could cause excessive valve outlet gas pressure immediately or at some future time. If natural gas supply pressure is too high, install a regulator in the supply line before it reaches the heater. If natural gas supply pressure is too low, contact your gas supplier.**

**NOTE: The inputs and capacity of the heater varies depending on elevation. For installation at elevations above 2,000 feet (610 meters), the heater shall be derated 4% for each 1,000 feet (305 meters) of elevation above sea level. If unsure of elevation, contact local gas supplier.**

1. If installation is at elevation >6,000 feet (>1,830 meters), replace pressure switch in accordance with **Pressure Switch Replacement** section.
2. Determine correct outlet pressure (refer to **Table 22**) for elevation of installation. If installation is at elevation >2,000 feet (>610 meters), derate the heater 4% for each 1,000 feet (305 meters) of elevation above sea level.

**Table 22. Required Manifold (Outlet) Gas Pressure**

| Installation Location | Elevation | | Single-Stage and Two-Stage High-Fire | | Two-Stage Low-Fire | |
|---|---|---|---|---|---|---|
| | Feet | Meters | Natural Gas | Propane | Natural Gas | Propane |
| | | | Manifold Pressure (IN WC) | | | |
| US, Canada | 0–2000 | 0–610 | 3.5 | 10.0 | 1.8 | 5.0 |
| US | 2001–3000 | 611–915 | 3.1 | 8.8 | 1.6 | 4.4 |
| Canada | 2001–4500 | 611–1373 | 2.8 | 8.1 | 1.5 | 4.1 |
| US | 3001–4000 | 916–1220 | 3.0 | 8.5 | 1.5 | 4.2 |
| | 4001- 5000 | 1221–1525 | 2.8 | 8.1 | 1.5 | 4.1 |
| | 5001–6000 | 1526–1830 | 2.7 | 7.7 | 1.4 | 3.9 |
| | 6001–7000 | 1831–2135 | 2.6 | 7.4 | 1.3 | 3.7 |
| | 7001–8000 | 2136–2440 | 2.5 | 7.1 | 1.3 | 3.5 |
| | 8001–9000 | 2441–2745 | 2.4 | 6.7 | 1.2 | 3.4 |
| | 9001–10,000 | 2746–3045 | 2.2 | 6.4 | 1.2 | 3.2 |

3. Turn ON/OFF knob or switch on valve to OFF to prevent flow to combination gas valve.

**NOTE: Use a water column manometer that is readable to the nearest tenth of an inch.**

4. Connect manometer to output pressure tap on valve (see **Figure 21**).

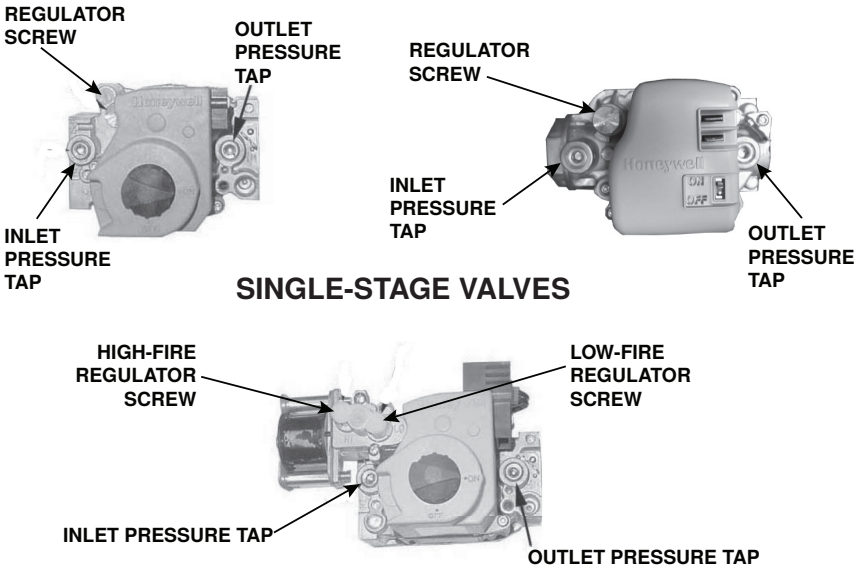


**Figure 21. Combination Gas Valves**

5. For single-stage or two-stage high fire valve, turn ON/OFF knob or switch on top of valve to ON. For two-stage low fire valve, disconnect wire from HI terminal on gas valve.

### Measure and Adjust Manifold (Outlet) Gas Pressure—Continued

**⚠ CAUTION ⚠**

**DO NOT bottom out the gas valve regulator screw. This can result in excessive overfire and heat exchanger failure due to unregulated manifold pressure.**

6. Remove cap from regulator screw (see **Figure 21**) and adjust pressure in accordance with **Table 22** by turning regulator screw IN (clockwise) to increase pressure or OUT (counterclockwise) to decrease pressure. Reconnect wire to Hi terminal on two-stage high fire valve.
7. Turn up thermostat—for separated-combustion units, depress and hold door safe switch—and cycle burner once or twice to properly seat adjustment spring in valve and recheck outlet pressure. When pressure corresponds to **Table 22**, disconnect manometer and install cap on regulator screw.
8. Check for leakage at outlet pressure tap fitting. Correct as necessary.
9. Connect manometer to inlet pressure tap (see **Figure 21**). While heater is operating, measure inlet pressure, which should be between 5 and 14 IN WC for natural gas or between 11 and 14 IN WC for propane.
10. If inlet pressure is not between 5 and 14 IN WC for natural gas or between 11 and 14 IN WC for propane, inlet pressure must be corrected by adjusting manifold (outlet) pressure in accordance with steps 3 through 6.
11. Use permanent marker to fill in appropriate input and capacity values on high-elevation adjustment label from literature bag provided with unit. Select location for label on outside of heater access panel that will be conspicuous to anyone operating or servicing unit. Ensure that surface is clean and dry and affix label.
12. Observe heater operation for at least one complete cycle to check for safe and proper operation. For separated-combustion units, depress and hold door safe switch.

### Pressure Switch Replacement

**NOTE: For installations at elevations >6,000 feet (>1,830 meters), the pressure switch must always be replaced before the heater is operated. The switch is shipped separately for field-installation if the unit Is ordered with high-elevation option DJ20.**

1. Locate pressure switch in control compartment (see **Figure 19**) and mark and disconnect two switch wires.
2. Mark and disconnect sensing tube(s) from pressure switch.
3. Remove two screws that secure mounting bracket and remove bracket and pressure switch. Save bracket and screws for reuse.
4. Install replacement pressure switch (refer to replacement parts manual found at **www.reznorhvac.com** for PN) using mounting bracket and two screws. Reconnect sensing tube(s) and wires.

# MAINTENANCE

## ⚠ WARNING ⚠

- **If you turn OFF the electrical power supply, turn OFF the gas.**
- **Eye protection is recommended when cleaning unit.**

## ⚠ CAUTION ⚠

- **When re-lighting, always follow the lighting instructions on the heater.**
- **If any of the original wire supplied with the appliance must be replaced, it must be replaced with wiring material having a temperature rating of at least 220°F (105°C), except for limit control, flame rollout, and sensor lead wires, which must be rated at 302°F (150°C).**

**NOTE: To ensure long life and satisfactory performance, a heater that is operated under normal conditions should be inspected and cleaned at the start of each heating season. If the heater is operating in an area where an unusual amount of dust or soot or other impurities are present in the air, more frequent maintenance is recommended.**

The unit is designed to operate with a minimum of maintenance. However, to ensure long life and satisfactory performance, routine service is recommended. When servicing, follow standard safety procedures and those specific instructions and warnings in this manual. The following is designed to aid a qualified service person in maintaining and servicing this equipment.

### Service Checklist

At a minimum, perform the following annually (see **Figure 19** for component locations):

- ❑ Inspect burner/control compartment annually to determine if cleaning is necessary.
- ❑ Clean all dirt, lint, and grease from combustion air opening and venter assembly.
- ❑ Clean all dirt, lint, and grease from fan blade, fan guard, and motor.
- ❑ Check heat exchanger both internally and externally.
- ❑ Check burner for scale, dust, or lint accumulation and clean if needed.
- ❑ Check gas valve to ensure that gas flow is being shut off completely.
- ❑ Check vent or vent/combustion air system for soundness and clean openings.
- ❑ Replace any parts that do not appear sound.
- ❑ Check for any damaged wiring and replace as necessary.

### Maintenance Procedures

## ⚠ CAUTION ⚠

- **When any service is completed, ensure that the unit is reassembled correctly so that no unsafe conditions are created.**
- **If replacement parts are required, use only factory-authorized parts.**

## Maintenance Procedures—Continued

### *Burner Maintenance*

Visually inspect the burner compartment (see **Figure 22**). If there is an accumulation of dirt, dust, and/or lint, clean the compartment and remove and clean the burner as follows:

1. Remove gas and electric supply:
   a. Shut OFF gas supply ahead of union at manual shutoff valve outside cabinet.
   b. Turn OFF electric supply.
   c. Disconnect gas supply at union outside of cabinet.

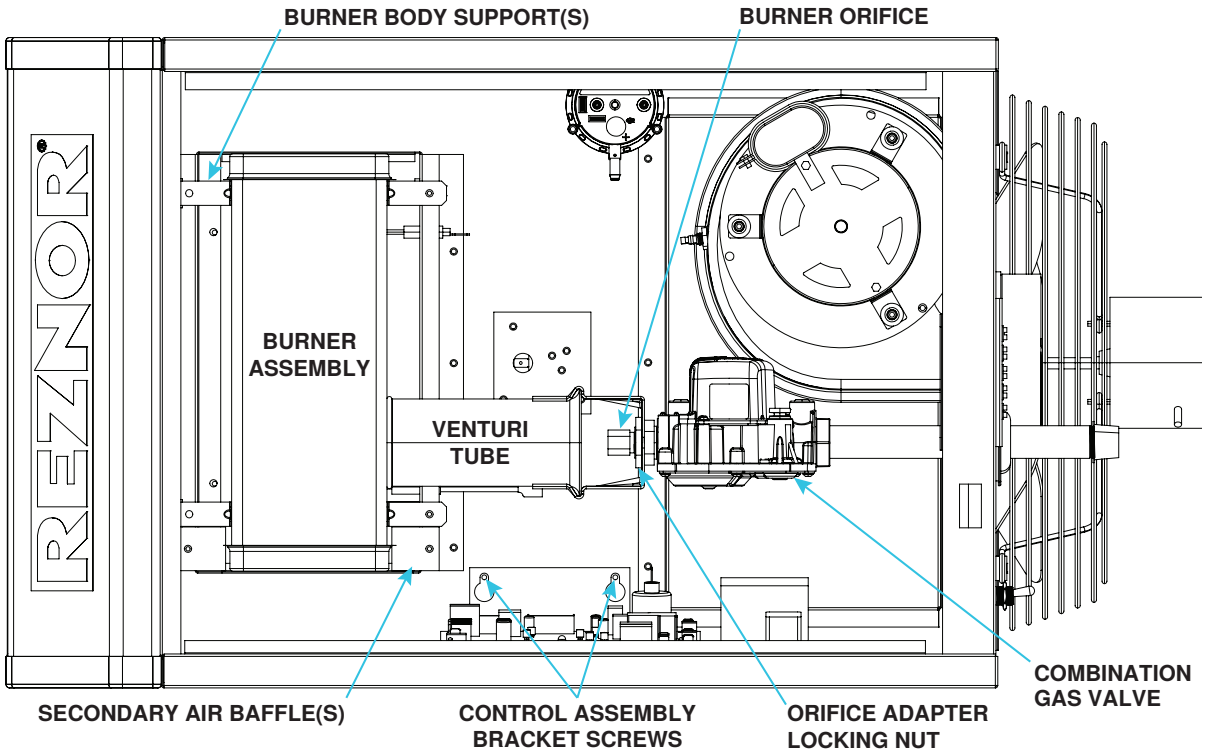


**Figure 22. Burner Compartment (Typical)**

## ⚠ CAUTION ⚠

**Take care not to damage the ignitor while removing or cleaning the burner assembly.**

2. Remove burner assembly (see **Figure 22**):
   a. Remove access panel.
   b. Disconnect gas train:
      (1) Mark and disconnect wires at combination gas valve.
      (2) Carefully remove burner orifice and orifice adapter locking nut.
      (3) Slide orifice adapter out through bracket on venturi tube while pushing gas train to right. This will move gas train out of way.
   c. Detach control assembly:
      (1) Remove two screws that secure control assembly bracket.
      (2) Being careful not to disconnect any wires, slide control assembly to right.

d. Remove secondary air baffle(s) (unit sizes 60–400 only):

(1) Locate flat plate(s) identified as secondary air baffle(s)—vertical along right side of burner. Quantity of baffles could be one to four depending on heater size. Each baffle is held in place by one screw.

(2) For correct re-assembly on secondary air shield, mark location (top and bottom) of each baffle.

(3) Remove screw(s) and remove baffle(s) (all).

e. Locate burner body supports—depending on size, burner will have two or more supports. At each support, remove one screw that secures support to secondary air shield.

f. While holding venturi tube, slide entire burner assembly slightly to right to disengage burner from supports on left.

g. Rotate open end of venturi tube inward toward heater and carefully pull burner assembly out of cabinet.

3. Inspect and clean burner:

**NOTE: If, upon inspection, any of the burner components are damaged or deteriorated, replace the burner assembly.**

a. With burner assembly removed, shine flashlight on burner ribbons. Look for carbon buildup, scale, dust, lint, and/or anything that might restrict flow through spaces between burner ribbons.

b. While holding burner assembly so that any foreign material will fall away from burner, use stiff bristle brush to loosen and remove any foreign material(s).

c. If burner is excessively dirty, remove one burner end cap:

(1) Remove four screws that secure end cap to burner housing.

(2) Lightly tap end cap to remove it.

d. Clean all foreign material from burner and venturi.

e. When burner is thoroughly clean, replace end cap, ensuring that it is tight against burner housing.

4. Inspect lower part of heat exchanger:

a. With burner assembly removed, shine bright light into each heat exchanger section at burner flame entrance of each tube.

b. With light shining into heat exchanger, observe outside for visible light. Repeat for each heat exchanger section.

c. If any light is observed, replace heat exchanger.

5. Re-install burner assembly (see **Figure 22**):

a. Attach burner assembly:

(1) While holding venturi tube, slide entire burner assembly into position.

(2) Align supports on left side with slots in burner shield and slide supports into slots.

(3) On right, install screw that secures each burner body support to secondary air shield.

b. Re-install secondary air baffles (unit sizes 60–400 only)—install screw that secures each baffle(s)—baffles may be different sizes and each must be installed in correct location as marked.

c. Attach control assembly:

(1) Carefully slide control assembly into position and secure using same screws.

(2) Check to ensure that all wire connections are secure.

## Maintenance Procedures—Continued

### *Burner Maintenance—Continued*

d. Reconnect gas train:
   (1) Slide gas train into position so that orifice adapter is slid through bracket on burner.
   (2) Secure gas train to bracket using locking nut.
   (3) Install gas orifice and reconnect wires to combination gas valve.

e. Install access panel.

f. Reconnect gas supply at union outside of cabinet.

g. Leak test connection using leak detecting solution. If leak is detected, tighten connection. If leak cannot be stopped by tightening connection, replace part(s).

6. Turn ON electric and gas.
7. Check for proper operation.

### *Burner Orifice Maintenance*

The burner orifice usually needs to be replaced only when installing a gas conversion kit. When ordering a replacement orifice only, provide BTUh content and specific gravity of gas as well as the model and serial number of the unit. When removing or replacing the burner orifice, take care not to damage the venturi tube and/or the bracket.

### *Heat Exchanger Maintenance*

**NOTE: Inspection of the lower portion of the heat exchanger is done with the burner removed. Refer to the Burner Maintenance section for information on inspecting the lower portion of the heat exchanger.**

1. Remove burner in accordance with **Burner Maintenance** section.
2. Remove any external dirt or dust accumulation.
3. Visually inspect heat exchanger for cracks and holes.
4. If crack or hole is found, replace heat exchanger.
5. Install burner in accordance with **Burner Maintenance** section.

### *Ignition System Maintenance*

- The DSI control module (circuit board, see **Figure 10**) monitors the operation of the heater including ignition. The only replaceable component is the 3-amp Type ATC or ATO fuse (color code: violet, PN 201685). If the fuse is blown, the problem is most likely an external overload. Correct the problem and replace the fuse.
- Do not attempt to disassemble the control module. However, check the lead wires each heating season for insulation deterioration and good connections.
- For the flame sensor (see **Figure 19** for location), disconnect the wire and remove the screw and the flame sensor. Clean flame sensor with an emery cloth before reinstalling.
- Proper operation of the direct spark ignition system requires a minimum flame signal of 1.0 microamps as measured by a microampmeter.

## ⚠ CAUTION ⚠

**When reassembling, the brown ground wire must remain attached to the ignitor.**

- For the ignitor (see **Figure 19** for location), disconnect the wire and remove the screw and ignitor. Clean the ignitor assembly with an emery cloth before reinstalling.

## ⚠ WARNING ⚠

**Due to high voltage on the spark wire and electrode, do not touch when energized.**

- The spark gap (see **Figure 23**) must be maintained to 1/8 inch.

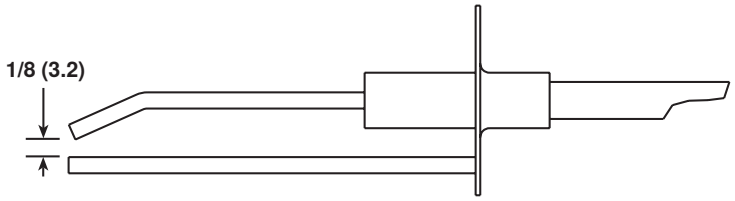


**Figure 23. Ignitor Spark Gap**

### *Fan and Motor Assembly Maintenance*

Inspect and clean the motor, fan guard, and blades. Remove any dirt and grease. Take care when cleaning the fan blades to prevent causing misalignment or imbalance. Check to ensure that the hub of the fan blades is secure to the shaft. If necessary, replace the assembly as follows:

1. If heater has been installed, turn OFF gas and disconnect electric power.
2. Remove access panel and disconnect fan motor wires, capacitor wires at capacitor, and ground screw.
3. Remove assembled parts (fan guard, motor, and fan blade).
4. Disassemble and replace part(s) as needed.
5. Reassemble using replacement part(s) as needed and original parts.
6. Ensure that fan is in proper position on shaft (see **Figure 24**), that setscrew is tightened in accordance with torque listed in **Table 23**, and that nuts securing motor to fan guard are torqued to to 30 inch-pounds.

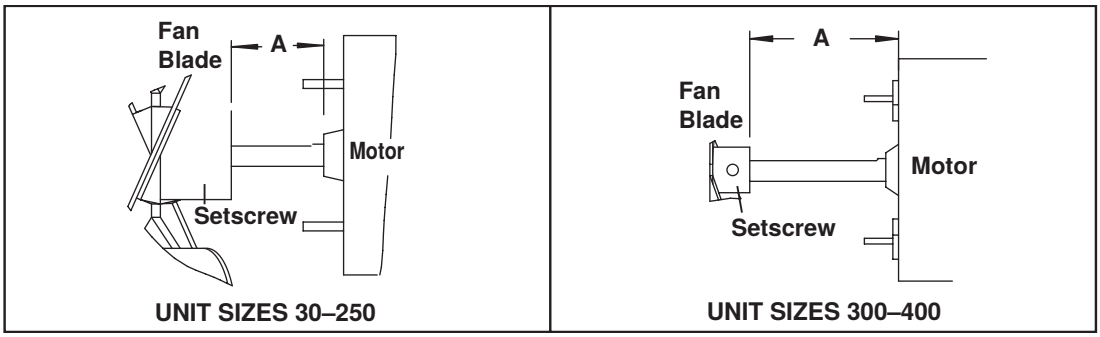


**Figure 24. Fan and Motor Spacing (Refer to Table 23)**

**Table 23. Fan and Motor Assembly Specifications**

| Setscrew Torque (Inch-Pounds ±10) | | | | | | | | | | |
|---|---|---|---|---|---|---|---|---|---|---|
| 80 | | | | 120 | | 130 | | | | |
| Unit Size (MBTUh) | | | | | | | | | | |
| 30 | 45 | 60 | 75 | 100 | 125 | 150, 175 | 200 | 225, 250, 300 | 350 | 400 |
| Dimension A* (Inches (mm)) | | | | | | | | | | |
| 1 (25) | 9/16 (14) | 1-1/2 (38) | 2-1/8 (54) | 2-3/8 (60) | 2-5/16 (59) | 2 (51) | 1-7/8 (48) | 2 (51) | 1-7/8 (48) | 1-3/8 (35) |

*See **Figure 24**.

7. Position assembly on heater and secure fan guard.
8. Rotate fan blade to check for adequate clearance. If adjustment is required, loosen mounting screws, reposition fan guard, and tighten screws to 30 inch-pounds. Repeat until assembly is positioned properly.

## Maintenance Procedures—Continued

### *Fan and Motor Assembly Maintenance—Continued*

9. Reconnect fan motor wires in accordance with wiring diagram. Secure wires to fan guard leg using tie wrap(s).
10. Install access panel.
11. Restore electric power to heater and turn ON gas.
12. Follow instructions on lighting instruction plate to light heater.
13. Check for proper heater operation.

### *Venter Wheel and Motor Assembly Maintenance*

**NOTES:**

- **Venter motor bearings are permanently lubricated.**
- **Keep all hardware removed to be used in reassembling and installing the replacement parts.**

Remove dirt and grease from the motor casing, venter housing, and venter wheel. Replace the venter wheel and motor assembly as follows:

1. Turn OFF gas and disconnect electric power.
2. Remove burner/control compartment access panel.
3. Disconnect three venter motor wires at DSI control, capacitor wires at capacitor (if applicable), and ground screw (located on control panel).
4. Detach gas train (unit sizes 30 and 45 only):
   a. Disconnect gas supply at union outside of cabinet.
   b. Mark and disconnect wires at gas valve.
   c. Carefully remove burner orifice and orifice adapter locking nut.
   d. Slide orifice adapter out through bracket on burner while pushing gas train to right. This will move gas train out of way.
5. While holding venter motor, remove three or four screws that secure venter motor mounting plate to venter housing. Remove motor and wheel assembly from heater.
6. Reassemble with replacement venter motor and wheel. Ensure that venter wheel is properly positioned on shaft (see **Figure 25**).
7. Reconnect venter wires in accordance with wiring diagram.
8. For unit sizes 30 and 45, reconnect gas supply at union outside of cabinet.
9. Leak test connection using leak detecting solution. If leak is detected, tighten connection. If leak cannot be stopped by tightening connection, replace part(s).
10. Install access panel.
11. Restore electric power to heater and turn ON gas.
12. Follow instructions on lighting instruction plate to light heater.
13. Check for proper heater operation.

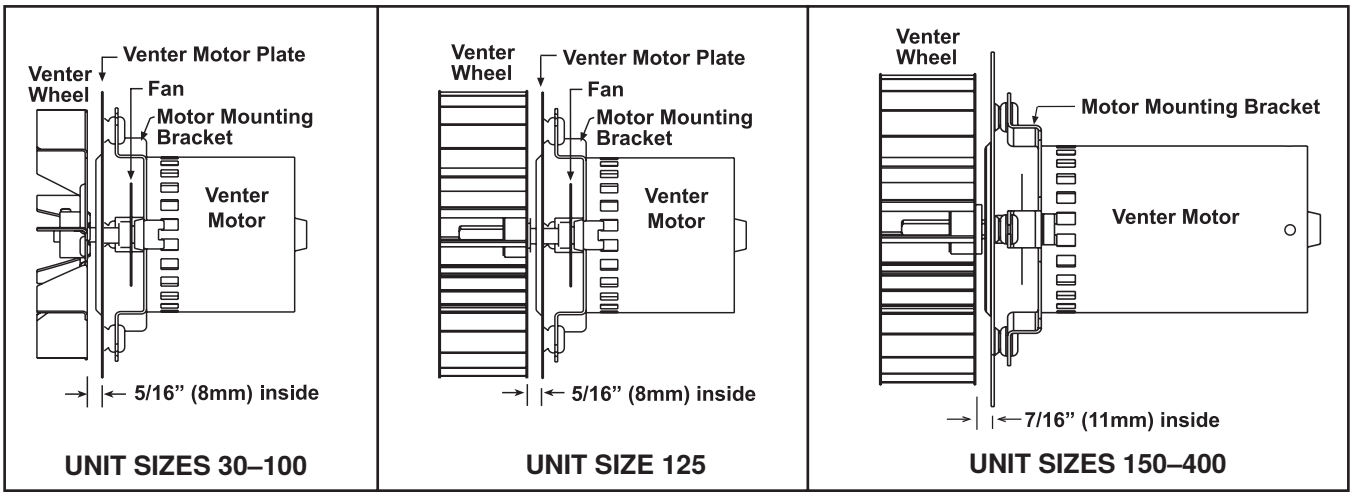


**Figure 25. Venter Wheel and Motor Assembly**

### *Combination Gas Valve Maintenance*

**⚠ WARNING ⚠**

**The combination gas valve is the prime safety shutoff. All gas supply lines must be free of dirt or scale before connecting them to the unit to ensure positive closure.**

Inspect the combination gas valve (see **Figure 19** for location), carefully remove any external dirt accumulation, and check wiring connections. Check the valve annually to ensure that the valve is shutting off gas flow completely as follows:

1. Close manual shutoff valve to prevent flow to combination gas valve.

**NOTE: Use a water column manometer that is readable to the nearest tenth of an inch.**

2. Connect manometer to outlet pressure tap on combination gas valve (see **Figure 21**).
3. Open manual shutoff and combination gas valves.
4. Use finger to fully block main burner orifice for several seconds.
5. Observe manometer with orifice blocked. If ***any*** pressure is indicated, combination gas valve is leaking and must be replaced before heater is restored to operation.

### *Pressure Switch Maintenance*

If it is determined that the pressure switch needs replacing, use only the factory-authorized replacement part that is designed for the model and size of heater being serviced. Replace the switch in accordance with the **Pressure Switch Replacement** section.

**NOTES:**

- **Depending on the date of manufacture and unit size, the pressure switch may not be in the location indicated. Check the control bracket on the bottom of the compartment or further down on the compartment wall.**
- **A unit operating above 6,000 feet (1,830 meters) in elevation requires a high-elevation pressure switch (refer to Pressure Switch Replacement section).**

### *High Temperature Limit Control Maintenance*

If it is determined that the high temperature limit control needs replacing, use only a factory-authorized replacement part that is designed for the size of heater. For the approximate limit control location, see **Figure 19**.

## Maintenance Procedures—Continued

### *Transformer Maintenance*

Use a voltmeter to verify that there are 24V output from the transformer. If the transformer is not functioning, it must be replaced. Use a replacement transformer identical to the factory-installed model. For the transformer location, see **Figure 19**.

### *Disconnect Switch Maintenance*

If it is determined that the disconnect switch needs replacing, use only the factory-authorized replacement part that is designed for the heater. Always replace the electrical box cover.

### *Vent or Vent/Combustion Air System Maintenance*

Check the complete system at least once a year. Inspection should include all joints, seams, concentric adapter box (separated-combustion units), inlet air guard or inlet air cap (separated-combustion units), and the vent terminal cap. Clean all openings and replace any defective parts.

### *Flame Rollout Switch Maintenance (Model UDXC, Unit Sizes 30–125)*

- The cause of a flame rollout switch (see **Figure 19** for location) activating must be determined. Activation of the manually-reset flame rollout switch could be caused by one or more of the following:
  a. Restricted or plugged heat exchanger
  b. Too much building exhaust
  c. Manifold gas pressure too high
  d. Restricted combustion air inlet or exhaust outlet in combination with defective pressure switch
  e. Electrical power interruption during operation
  f. Unit being operated with line voltage disconnect (24V thermostat is required)
- If a flame rollout switch trips, inspect the burner/control compartment for signs of excessive heat and burned wiring. If there is damage to the control compartment, repairs must be made before resetting the switch.
- If the compartment appears normal, reset by depressing the red button on the switch (15–20 minutes are required for the switch to cool sufficiently before resetting). A distinct click will be felt when the switch resets. Operate the furnace. If the flame rollout switch trips again, determine and correct the cause before resetting the switch.
- If it is determined that the flame rollout switch needs replacing, use only the factory-authorized replacement part that is designed for that size of heater. The disconnect toggle switch is on the rear of the heater.

# TROUBLESHOOTING

## General Troubleshooting

**Table 24. General Troubleshooting**

| Symptom | Probable Cause | Remedy |
|---|---|---|
| A. Venter motor will not start | 1. No power to unit | Turn ON power and check supply fuses or circuit breaker |
| | 2. No 24V power to integrated circuit board | Turn up thermostat |
| | | Check control transformer output |
| | 3. Integrated circuit board fuse blown | Correct cause and replace fuse (3A, type ATC or ATO, 32VDC) |
| | 4. No power to venter motor | Tighten connections at circuit board and/or motor terminals |
| | 5. Integrated circuit board defective | Replace integrated circuit board |
| | 6. Defective venter motor | Replace venter motor (refer to **Venter Wheel and Motor Assembly Maintenance** section) |

| Table 24. General Troubleshooting | | |
|---|---|---|
| **Symptom** | **Probable Cause** | **Remedy** |
| B. Burner will not light | 1. Manual valve not open | Open manual valve |
| | 2. Air in gas line | Bleed gas line (initial startup only) |
| | 3. Gas pressure too high or too low | Supply pressure should be 5–14 IN WC for natural gas or 11–14 IN WC for propane |
| | 4. No spark | Perform following: |
| | a. Loose wire connections | Ensure that all wire connections are solid |
| | b. Transformer failure | Ensure that 24V power is available |
| | c. Incorrect spark gap | Maintain spark gap at 1/8 inch |
| | d. Spark cable shorted to ground | Replace worn or grounded spark cable |
| | e. Spark electrode shorted to ground | Replace ceramic spark electrode if it is cracked or grounded |
| | f. Burner not grounded | Ensure that integrated circuit board is grounded (terminals P1–9) |
| | g. Circuit board not grounded | Ensure that integrated circuit board is grounded to furnace chassis |
| | h. Unit not properly grounded | Ensure that unit is properly field grounded to earth ground and properly phased (L1 to hot lead L2 to neutral) |
| | i. Integrated circuit board fuse blown | Correct cause and replace fuse (3A, type ATC or ATO, 32VDC) |
| | j. Faulty integrated circuit board | If 24V power is available to integrated circuit board and all other causes have been eliminated, replace board |
| | 5. Lockout device interrupting control circuit by above causes | Reset lockout by interrupting control at thermostat or main power |
| | 6. Interlock door switch open | Close access door or replace switch |
| | 7. Pressure switch not closing | Perform following: |
| | | Ensure that unit is properly vented |
| | | Remove obstruction(s) from vent |
| | | Replace faulty tubing to pressure switch |
| | 8. Faulty pressure switch | Replace pressure switch |
| | 9. Main valve not operating | Perform following: |
| | a) Defective valve | If 24V power is measured at valve connections and valve remains closed, replace valve |
| | b) Loose wire connections | Check and tighten all wiring connections |
| | 10. Integrated circuit board does not power main valve | Perform following: |
| | a) Loose wire connections | Ensure that all wire connections are solid |
| | b) Flame sensor grounded | Ensure that flame sensor lead is not grounded or that sensor insulation or ceramic is not cracked—replace as required |
| | c) Incorrect gas pressure | Supply pressure should be 5–14 IN WC for natural gas or 11–14 IN WC for propane |
| | d) Cracked ceramic at sensor | Replace sensor |
| C. Burner cycles ON and OFF | 1. Gas pressure too high or too low | Supply pressure should be 5–14 IN WC for natural gas or 11–14 IN WC for propane |
| | 2. Burner not grounded | Ensure that integrated circuit board is grounded (terminals P1–9) |
| | 3. Circuit board not grounded | Ensure that integrated circuit board is grounded to furnace chassis |
| | 4. Faulty integrated circuit board | If 24V power is available to integrated circuit board and all other causes have been eliminated, replace board |
| | 5. Pressure switch not closing | Perform following: |
| | | Ensure that unit is properly vented |
| | | Remove obstruction(s) from vent |
| | | Replace faulty tubing to pressure switch |
| | 6. Faulty pressure switch | Replace pressure switch |
| | 7. Flame sensor grounded | Ensure that flame sensor lead is not grounded or that sensor insulation or ceramic is not cracked—replace as required |
| | 8. Cracked ceramic at sensor | Replace sensor |
| | 9. Incorrect polarity | Reverse line volt leads to integrated circuit board |
| | 10. Pin terminal loose on wire harness | Replace wire harness |

## General Troubleshooting—Continued

**Table 24. General Troubleshooting—Continued**

| Symptom | Probable Cause | Remedy |
|---|---|---|
| D. No heat (heater operating) | 1. Incorrect valve outlet pressure or orifice | Check valve outlet pressure (refer to unit rating plate for manifold pressure) |
| | 2. Cycling on limit control | Check air throughput |
| | 3. Improper thermostat location or adjustment | Refer to thermostat manufacturer's instructions |
| E. Fan or venter motor will not run | 1. Circuit open | Check wiring and connections |
| | 2. Defective integrated circuit board | Replace board |
| | 3. Defective motor | Replace motor |
| F. Fan or venter motor turns ON and OFF while burner is operating | 1. Motor overload device cycling ON and OFF | Check motor load against motor rating plate—replace motor if needed |
| G. Fan or venter motor cuts out on overload | 1. Low or high voltage supply | Correct electric supply |
| | 2. Defective motor | Replace motor |
| | 3. Poor airflow | Clean motor, fan, and fan guard |

## Unit Troubleshooting Using DSI Control Module

**NOTE: IMPORTANT: When using a multimeter to troubleshoot the 24V circuit, place the multimeter's test leads into the connectors located on the ignition control. Do not remove connectors or terminals from the electrical components. Doing so can result in misinterpreted readings caused by the control module's fault mode monitoring circuits.**

The SSD on the DSI control module (refer to **Circuit Board (DSI Control Module)** section) may be used to troubleshoot the unit. The control module monitors the operation of the heater, and the display indicates normal operation and various abnormal conditions. If the heater fails to operate properly, check this display (refer to **Table 25**) to determine the cause and/or to eliminate certain causes. Remove and reapply power to the control module to view the last five fault codes stored in its memory—the most recent to least recent fault codes will be displayed. See **Figure 26** for a flowchart for troubleshooting the unit using the DSI control module.If troubleshooting indicates that repair of the DSI control module is required, note that its only replaceable part is the fuse, which is a type ATC or ATO 3A fuse, color code violet (PN 201685).Remove and reapply power to the control module to view the last five fault codes stored in its memory. The most recent to least recent fault codes will be displayed.

**Table 25. Circuit Board (DSI Control Module) Display Codes**

| Display Code Status | Display Code | Indication |
|---|---|---|
| Steady | — | Normal operation—no call for heat |
| | 0 | Ignition sequence active |
| | H | Normal operation—call for heat (strong flame) |
| Flashing | 2 | Normal operation—call for heat (weak flame) |
| | L | Lockout from failed ignition or flame loss |
| | 3 | Pressure switch is not closed within 30 seconds of venter motor energizing |
| | 4 | Pressure switch is closed before venter motor is energized |
| | 5 | Limit switch or rollout open |
| | 6 | Undesired flame |
| | 7 | Polarity reversed |
| Steady | Off | Internal fault/power failure |

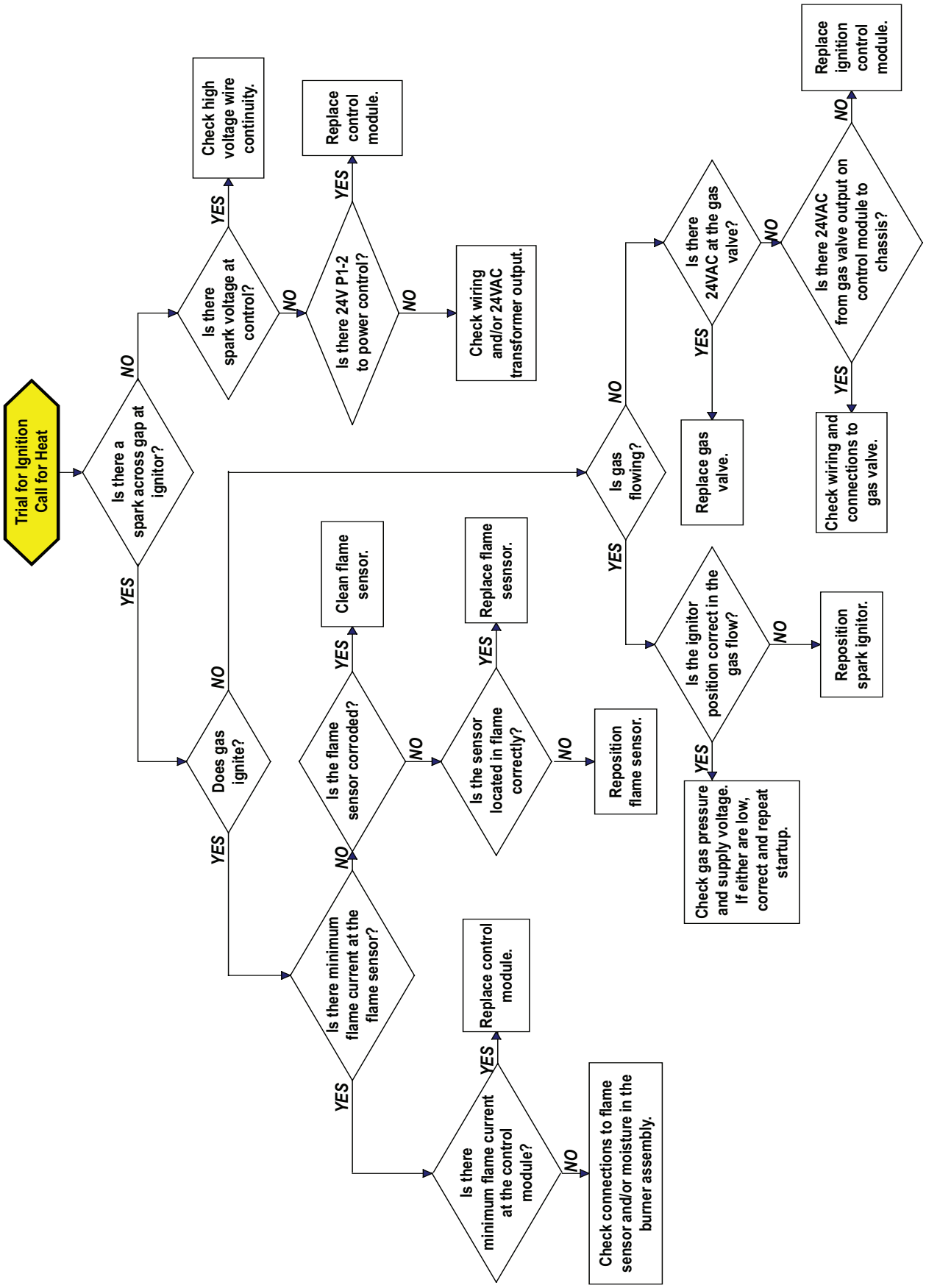


**Figure 26. DSI Control Module Troubleshooting Flowchart**

## INSTALLATION RECORD (TO BE COMPLETED BY INSTALLER)

| Model | Serial No. | Date of Installation | Notes |
|---|---|---|---|
| | | | |
| | Installer | Distributor | |
| Name | | | |
| Company | | | |
| Address | | | |
| | | | |
| Phone No. | | | |

## For more information on Reznor HVAC products:

- **Contact your local Reznor representative at 1-800-695-1901**
- **Refer to the technical specifications, manuals, and consumer materials found at www.reznorhvac.com**

Intertek

Specifications and illustrations subject to change without notice or incurring obligations.
Latest version of this manual is available at **www.reznorhvac.com**.
©2026 Reznor LLC, Saint Charles, MO. All rights reserved.
**UBXC-UDXC-IOM (08-26) 1042980-K**