Kingston™

Wall-mount top-spud toilet bowl, 1.28 or 1.6 gpf

K-84434

Features

- Elongated bowl offers added room and comfort
- Siphon jet
- 1.28 or 1.6 gpf (4.8 or 6.0 lpf) depending on flushometer specified
- 10-1/2" x 7-7/8" (267 x 200 mm) water surface
- 1-1/2" (38 mm) top spud

Material

- Vitreous china

Technology

- Cast-on putty plate resists breakage
- New design eliminates gas leaks, splashing and paper shredding

Installation

- Three-bolt wall-mount
- This product is not designed or intended for bariatric use
- This product replaces Stratton™ K-4450-C



ADA | CSA B651 | OBC

Codes/Standards

ASME A112.19.2/CSA B45.1
DOE - Energy Policy Act 1992
EPA WaterSense®
California Energy Commission (CEC)
ADA
ICC/ANSI A117.1
CSA B651
OBC

KOHLER® One-Year Limited Warranty

See website for detailed warranty information.

Available Colors/Finishes

Color tiles intended for reference only.

Color	Code	Description
	0	White
	7	Black Black™

Kingston™

Wall-mount top-spud toilet bowl, 1.28 or 1.6 gpf

K-84434

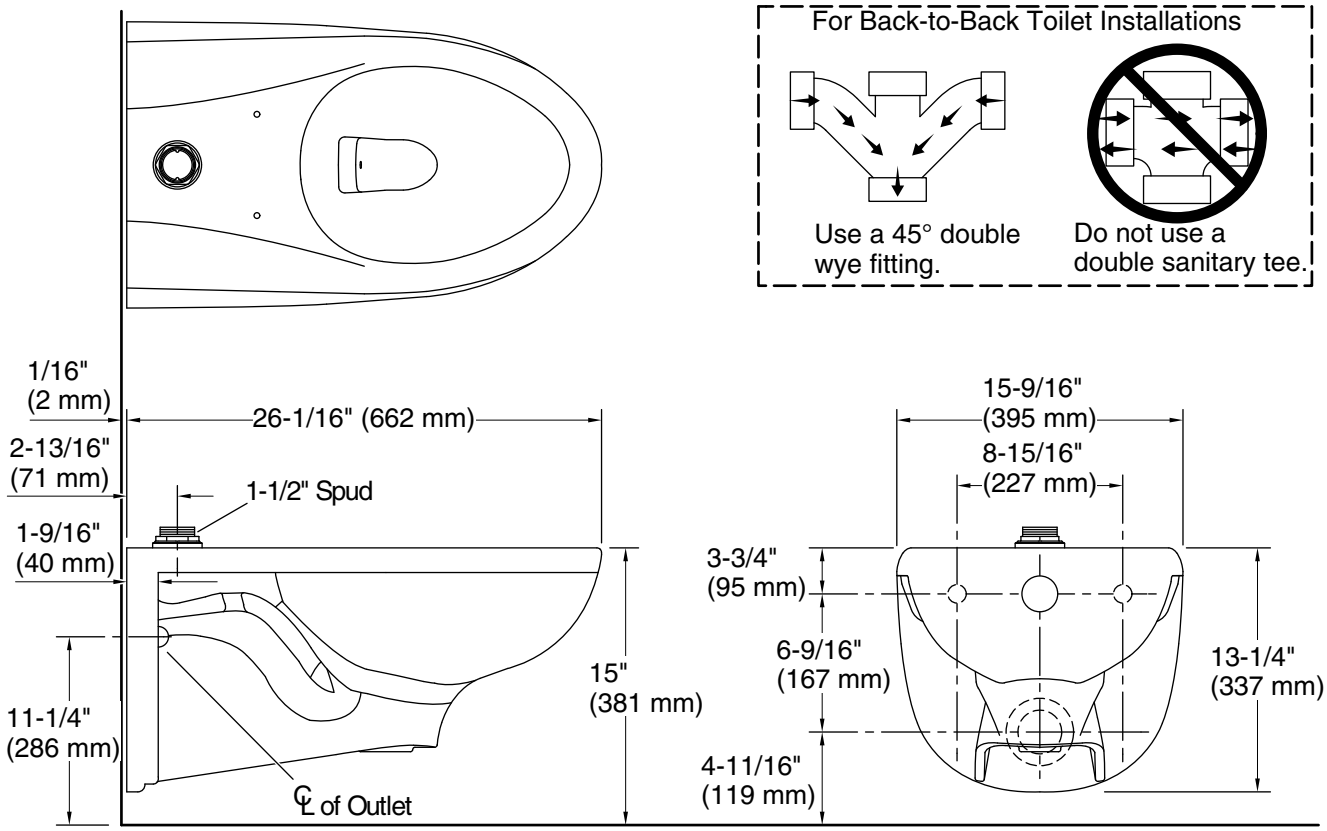

Technical Information

All product dimensions are nominal.

Toilet type:	Wall-hung
Waste Outlet:	Wall
Trap passageway:	2-5/16" (59 mm)
Rim to water surface:	4-15/16" (125 mm)

Notes

Install this product according to the installation instructions.

ADA, OBC, CSA B651 compliant when installed to the specific requirements of these regulations.

Plumbing codes may require elongated toilets and elongated, open-front seats in public bathrooms.

Accessibility standards may require controls to be located on the open side of the toilet.