Engineering Specification

Job Name _____ Contractor _____

Job Location _____ Approval _____

Engineer _____ Contractor's P.O. No. _____

Approval _____ Representative _____

LEAD FREE*

Series LFFBV-3-PR-SS

2-Piece, Full Port, Lead Free* Brass Ball Valves with Integral Press Fitting End Connections, SS Ball and Stem

Designed for use in ProPress® Piping Systems
Sizes: ½" – 2"

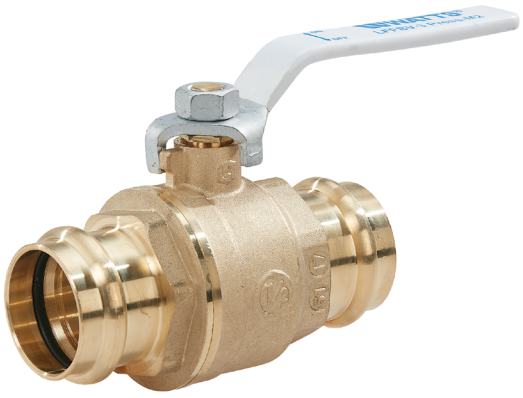

LFFBV-3-PR-SS

Series LFFBV-3-PR-SS are two-piece, lead free, full port, ball valves with integral press end fittings and stainless steel ball and stem. These valves are designed for use in plumbing, heating, and potable water applications. It features a lead free brass body, adjustable packing gland, and bottom-loaded blowout proof stem. These valves are made with integral ASTM-B88 compliant press end connections that are designed for types K, L and M hard copper tubing.

The Series LFFBV-3-PR-SS features Lead Free* construction to comply with low lead installation requirements.

Features

- Lead Free* brass body with stainless steel ball and stem
- Tested and Certified to NSF/ANSI 61 Annex G ½" – 2"
- Designed for types K, L, and M hard copper tubing ½" - 2" and soft copper tubing ½" – 1¼"
- Press end connections comply to ASTM-B88
- Press connection rated to 250psi CWP up to 250°F (13.8 bar to 121°C)
- Bottom loaded, blowout proof stem
- PTFE seats, seals and thrust washers

Applications

- Lead free and potable water installations
- Commercial, Residential, Industrial plumbing
- Hydronics

Specification

Approved valve to be 2-piece, full port, forged body of Lead Free* brass. Certified to NSF/ANSI 61 Annex G by UL for potable water applications. Stainless steel ball and stem and PTFE seats, seal, and thrust washer required. Press fitting rated to 250psi CWP up to 250°F (13.8 bar to 121°C) and press ends must comply to ASTM-B88. The valve shall be constructed using Lead Free* brass. Lead Free* brass ball valves shall comply with state codes and standards, where applicable, requiring reduced lead content. Valve shall be a Watts Series LFFBV-3-PR-SS.

Approvals

NSF/ANSI 372 - Lead content

NSF/ANSI 61 - Health effects

ANSI/NSF 61-8 cULus

NOTICE

The information contained herein is not intended to replace the full product installation and safety information available or the experience of a trained product installer. You are required to thoroughly read all installation instructions and product safety information before beginning the installation of this product.

ProPress® is a registered trademark of Viega N.A.

***The wetted surface of this product contacted by consumable water contains less than 0.25% of lead by weight.**

Watts product specifications in U.S. customary units and metric are approximate and are provided for reference only. For precise measurements, please contact Watts Technical Service. Watts reserves the right to change or modify product design, construction, specifications, or materials without prior notice and without incurring any obligation to make such changes and modifications on Watts products previously or subsequently sold.

WATTS®

Small Size Valves ½" to 2"

Materials

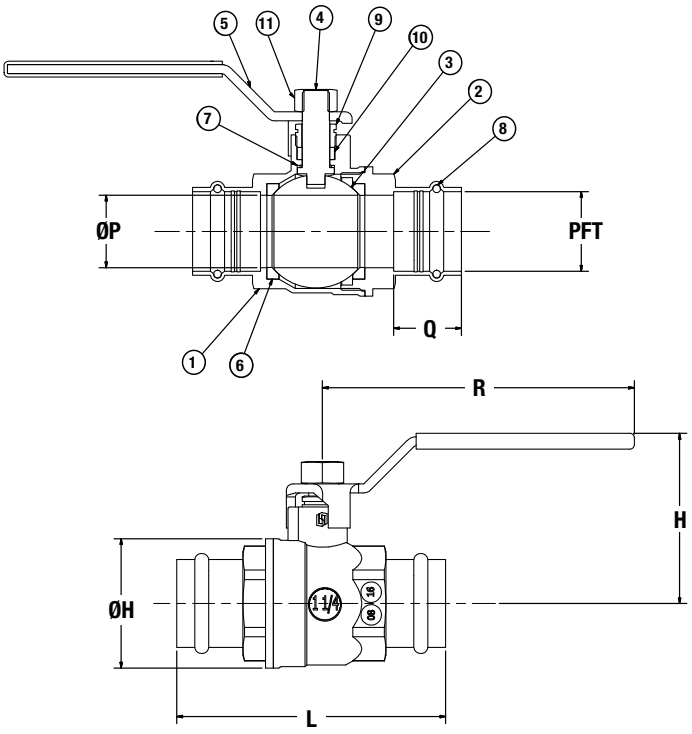

Call customer service if you need assistance with technical details.

N POS	PART NAME	MATERIAL	N PCS
1	Body	Brass	1
2	Adapter	Brass	1
3	Ball	Stainless Steel	1
4	Stem	Stainless Steel	1
5	Handle	Stainless Steel	1
6	Ball Seat	PTFE	2
7	Thrust Washer	PTFE	1
8	O-Ring	EPDM	2
9	Packing Nut	Brass	1
10	Packing Gland	PTFE	2
11	Nut	Stainless Steel	1

Dimensions-Weights

SIZE		DIMENSIONS												WEIGHT	
ORDERING	PFT	ØP		Q		ØH		L		H		R			
CODE	*in*	*in*	*mm*	*in*	*mm*	*in*	*mm*	*in*	*mm*	*in*	*mm*	*in*	*mm*	*Lbs*	*kgs*
88007794	½	9/16	14.5	1⅛	28.0	1 3/16	30.0	3 7/16	86.5	1 11/16	42.2	3 13/16	97.0	0.51	0.23
88007795	¾	¾	19.0	1 3/16	30.0	1½	37.5	3⅜	97.9	1 15/16	48.7	3 13/16	97.0	0.78	0.35
88007796	1	1	25.0	1 3/16	30.0	1⅞	47.0	4⅛	105.0	2 15/16	58.5	4 7/16	112.0	1.22	0.55
88007797	1¼	1¼	32.0	1 3/16	30.0	2¼	57.0	4 9/16	116.5	2¾	69.3	5 3/16	132.0	1.67	0.76
88007798	1½	1 9/16	39.0	1⅜	35.0	2 11/16	69.0	5 3/16	131.1	2 15/16	74.5	5 3/16	132.0	2.42	1.10
88007799	2	2	50.0	1 9/16	40.0	3⅜	86.5	6	152.5	3 7/16	88.0	6 7/16	163.5	3.87	1.76

ACCESSORIES					
Stem Extension		**Locking Handle**		**Replacement Handle**	
Ordering Code	*Description*	*Ordering Code*	*Description*	*Ordering Code*	*Description*
88005505	½" - ¾" HK SXI-Press-M2	0789520	Locking Handle KIT For ½" LFFBV-3-PRESS ball valves	0789527	Replacement Handle KIT For ½" - ¾" LFFBV-3-PRESS ball valves
88005505	½" - ¾" HK SXI-Press-M2	0789525	Locking Handle KIT For ¾" LFFBV-3-PRESS ball valves	0789527	Replacement Handle KIT For ½" - ¾" LFFBV-3-PRESS ball valves
88005507	1" HK SXI-Press-M2	0789521	Locking Handle KIT 1" LFFBV-3-PRESS ball valves	0789528	Replacement Handle KIT 1" LFFBV-3-PRESS ball valves
88005508	1¼" – 1½" HK SXI-Press-M2	0789522	Locking Handle KIT 1¼"- 1½" LFFBV-3-PRESS ball valves	0789529	Replacement Handle KIT 1¼" - 1½" LFFBV-3-PRESS ball valves
88005510	2" HK SXI-Press-M2	0789523	Locking Handle KIT For 2" LFFBV-3-PRESS ball valves	0789530	Replacement Handle KIT For 2" LFFBV-3-PRESS ball valves-

USA: T: (978) 689-6066 • Watts.com
Canada: T: (888) 208-8927 • Watts.ca
Latin America: T: (52) 55-4122-0138 • Watts.com

© 2024 Watts