Honesty® | K-26273-Y

Showering kit, 2.5 gpm

Features

- Shift+® Square multifunction handshower offers full coverage and targeted massage spray options
- 8" (203 mm) Honesty® rainhead with a full coverage spray and an adjustable ball joint for precise spray adjustment
- 2.5 gpm (9.5 lpm) maximum flow rate
- Handshower contains flow-regulating check valve for backflow prevention
- Awaken® wall-mount supply elbow with check valve
- Right-angle shower arm and flange
- 27" (686 mm) slidebar length offers a custom shower at various heights
- Box includes: 8" rainhead, rainhead arm, handshower, 60" metal shower hose, adjustable slidebar with handshower mounting bracket, wall-mount supply elbow, and Rite-Temp valve trim
- Valve sold separately



Available Colors/Finishes

Color tiles intended for reference only.

	CP	Polished Chrome
	BL	Matte Black
	2MB	Vibrant Brushed Moderne Brass

1-800-4KOHLER (1-800-456-4537)
Kohler Co. reserves the right to make revisions without notice to product specifications.
For the most current specification sheet, go to www.kohler.com USA or www.kohler.ca Canada.
4-15-2026 2:41 - US-CA

Codes/Standards

ASME A112.18.1/CSA B125.1
DOE - Energy Policy Act 1992

Technical Information

All product dimensions are nominal.

Flow Rate

Shower/Rainhead Rated Maximum Flow:	2.5 gpm (9.5 l/min)
Handshower Rated Maximum Flow:	2.5 gpm (9.5 l/min)

Valves

Required Valve:	Pressure Balance

Material

- Premium material construction with metal handle ensures reliability and durability
- KOHLER finishes resist corrosion and tarnishing

Required Products/Accessories

- K-11748 Series Rite-Temp® Valves

Warranty

See website for detailed warranty information.

KOHLER® Faucet Lifetime Limited Warranty

1-800-4KOHLER (1-800-456-4537)
Kohler Co. reserves the right to make revisions without notice to product specifications.
For the most current specification sheet, go to www.kohler.com USA or www.kohler.ca Canada.
4-15-2026 2:41 - US-CA

THE BOLD LOOK OF KOHLER.

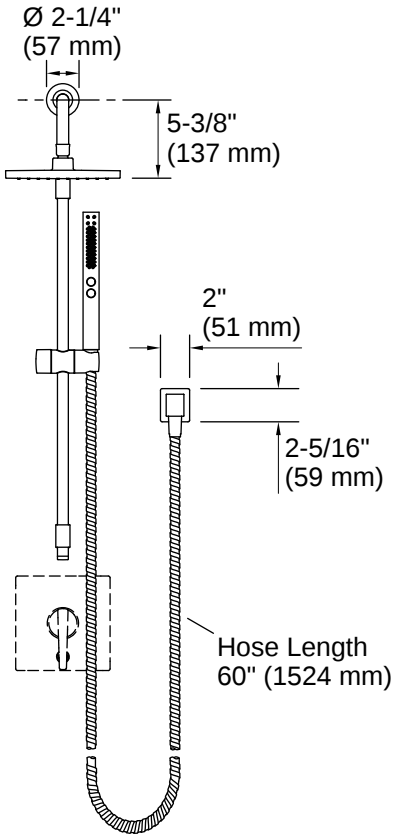

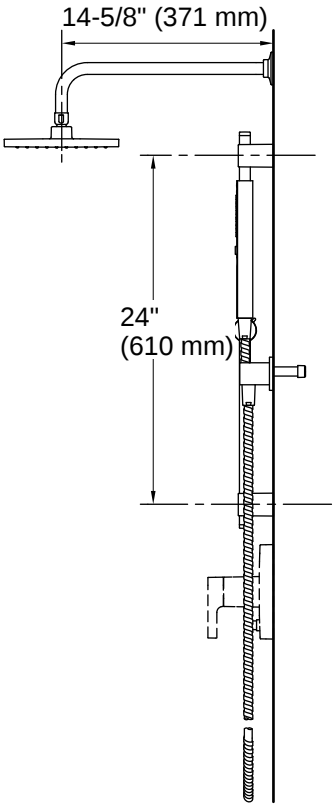

Installation

- Wall-mount

Installation Notes

Install this product according to the installation instructions.

1-800-4KOHLER (1-800-456-4537)
Kohler Co. reserves the right to make revisions without notice to product specifications.
For the most current specification sheet, go to www.kohler.com USA or www.kohler.ca Canada.
4-15-2026 2:41 - US-CA

THE BOLD LOOK OF KOHLER