EMTEK®

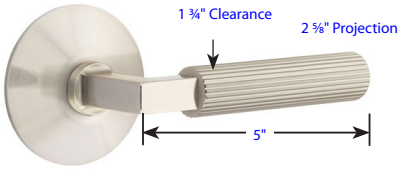

L-Square . Straight Knurled (LS.SK)
with Modern Rosette

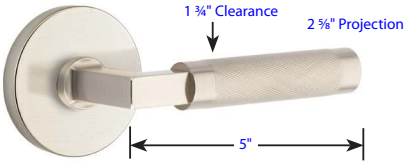

L-Square . Knurled (LS.KN)
with Disk Rosette

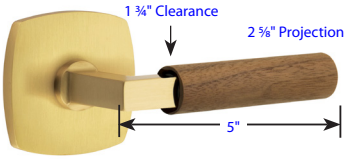

L-Square . Dark Walnut (LS.WNWD)
with Urban Modern

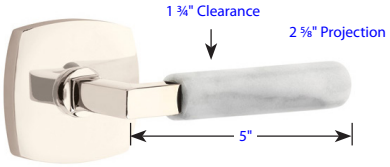

L-Square . White Marble (LS.MRWH)
with Urban Modern Rosette

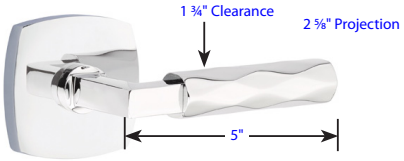

L-Square . Tribeca (LS.TR)
with Urban Modern Rosette

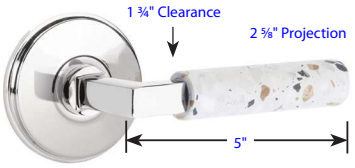

L-Square . Terrazzo (LS.TZLT)
with Disk Rosette

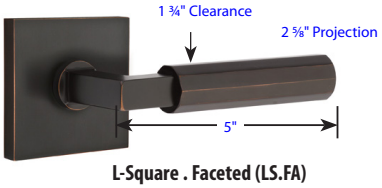

L-Square . Faceted (LS.FA)
with Square Rosette

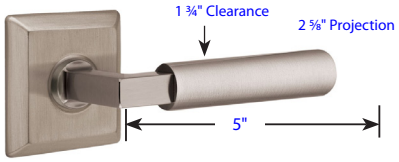

L-Square . Smooth (LSSM)
with Quincy Rosette

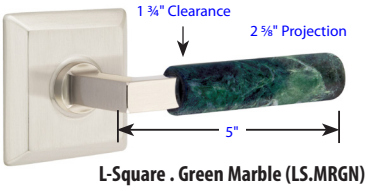

L-Square . Green Marble (LS.MRGN)
with Quincy Rosette

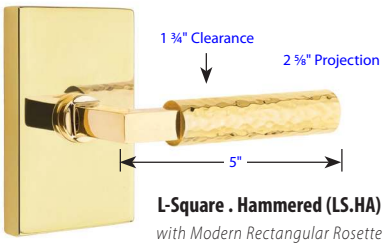

L-Square . Hammered (LS.HA)
with Modern Rectangular Rosette

See page 7 for rosette specification.

Door Thickness Specifications

- Standard Door Thickness: 1¼"- 2"
  Standard Components:
- Privacy Pin (for privacy sets)
- Inside Passage Half Spindle
- 1½" Rosette Screws
- Full-Lip Strike Plate

- Extended Door Thickness: 2"- 2½"
  Extended Components:
- Privacy Pin w/ Extension (for privacy sets)
- Long Inside Passage Half Spindle
- 2" Rosette Screws
- Extended Full-Lip Strike Plate

- Extended Door Thickness: 2½"- 3"
  Extended Components:
- Privacy Pin w/ Extension (for privacy sets)
- Extra Long Inside Passage Half Spindle
- 2½" Rosette Screws
- Extended Full-Lip Strike Plate

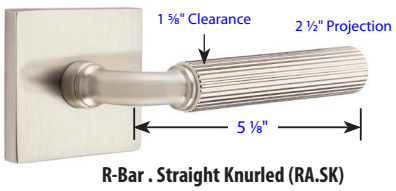

R-Bar . Straight Knurled (RA.SK)
with Square Rosette

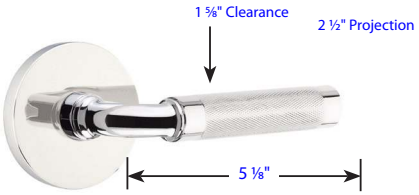

R-Bar . Knurled (RA.KN)
with Disk Rosette

R-Bar . Hammered (RA.HA)
with Neos Rosette

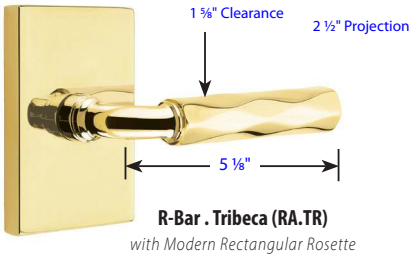

R-Bar . Tribeca (RA.TR)
with Modern Rectangular Rosette

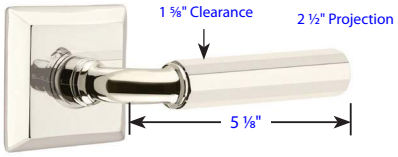

R-Bar . Faceted (RA.FA)
with Quincy Rosette

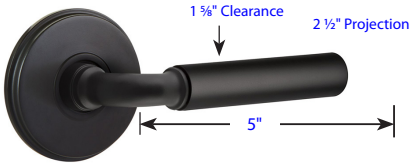

R-Bar . Smooth (RASM)
with Watford Rosette

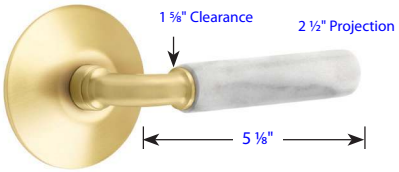

R-Bar . White Marble (RA.MRWH)
with Modern Rosette

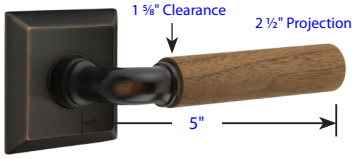

R-Bar . Dark Walnut (RA.WNWD)
with Quincy Rosette

R-Bar . Green Marble (RA.MRGN)
with Disk Rosette

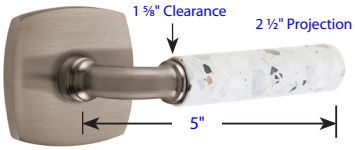

R-Bar . Terrazzo (RA.TZLT)
with Urban Modern Rosette

See page 7 for rosette specification.

Door Thickness Specifications

- Standard Door Thickness: 1¼"- 2"
  Standard Components:
- Privacy Pin (for privacy sets)
- Inside Passage Half Spindle
- 1½" Rosette Screws
- Full-Lip Strike Plate

- Extended Door Thickness: 2"- 2½"
  Extended Components:
- Privacy Pin w/ Extension (for privacy sets)
- Long Inside Passage Half Spindle
- 2" Rosette Screws
- Extended Full-Lip Strike Plate

- Extended Door Thickness: 2½"- 3"
  Extended Components:
- Privacy Pin w/ Extension (for privacy sets)
- Extra Long Inside Passage Half Spindle
- 2½" Rosette Screws
- Extended Full-Lip Strike Plate

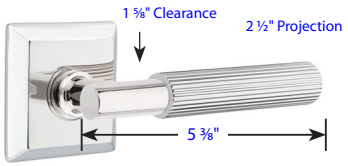

T-Bar . Straight Knurled (TA.SK)
with Quincy Rosette

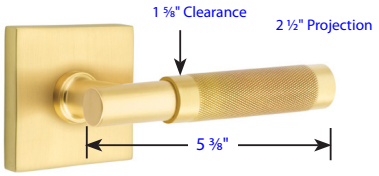

T-Bar . Knurled (TA.KN)
with Square Rosette

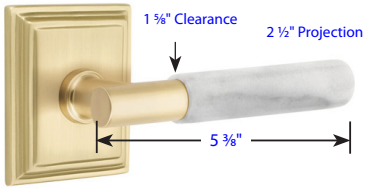

T-Bar . White Marble (TA.MRWH)
with Wilshire Rosette

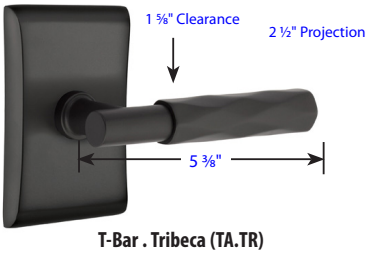

T-Bar . Tribeca (TA.TR)
with Neos Rosette

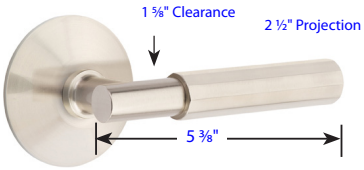

T-Bar . Faceted (TA.FA)
with Modern Rosette

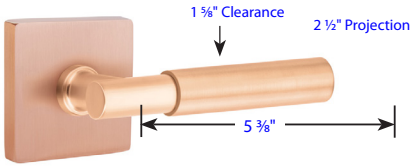

T-Bar . Smooth (TASM)
with Square Rosette

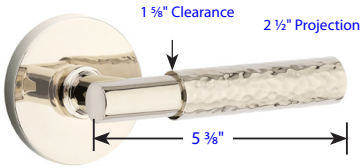

T-Bar . Hammered (TA.HA)
with Disk Rosette

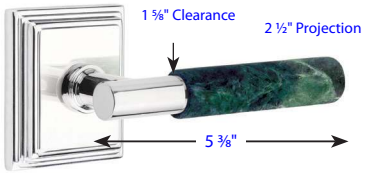

T-Bar . Green Marble (TA.MRGN)
with Wilshire Rosette

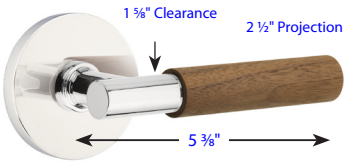

T-Bar . Dark Walnut (TA.WNWD)
with Disk Rosette

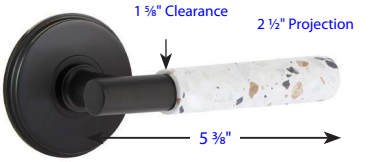

T-Bar . Terrazzo (TA.TZLT)
with Watford Rosette

See page 7 for rosette specification.

Door Thickness Specifications

- Standard Door Thickness: 1¼"- 2"
  Standard Components:
- Privacy Pin (for privacy sets)
- Inside Passage Half Spindle
- 1½" Rosette Screws
- Full-Lip Strike Plate

- Extended Door Thickness: 2"- 2½"
  Extended Components:
- Privacy Pin w/ Extension (for privacy sets)
- Long Inside Passage Half Spindle
- 2" Rosette Screws
- Extended Full-Lip Strike Plate

- Extended Door Thickness: 2½"- 3"
  Extended Components:
- Privacy Pin w/ Extension (for privacy sets)
- Extra Long Inside Passage Half Spindle
- 2½" Rosette Screws
- Extended Full-Lip Strike Plate

Aireon (A)
with Modern Rosette
DISCONTINUED

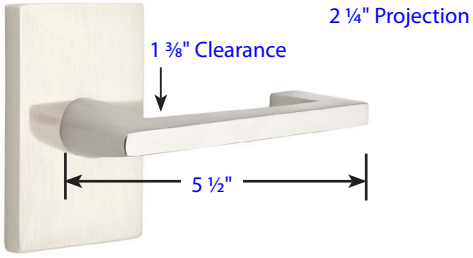

Argos (AG)
with Modern Rectangular Rosette

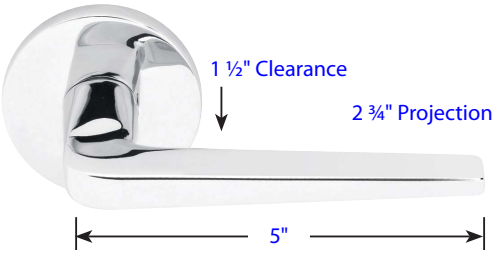

Athena (ATN)
with Disk Rosette

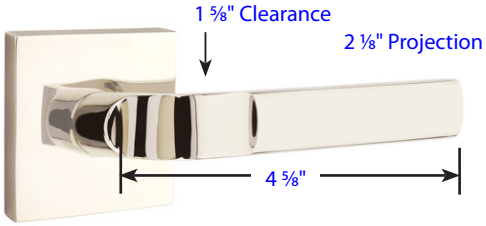

Aston (AST)
with Square Rosette

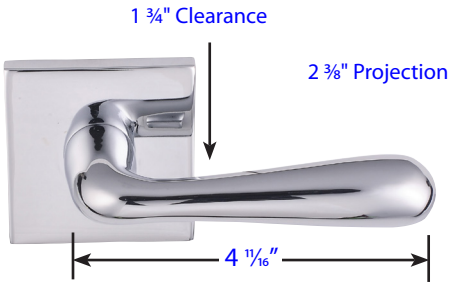

Basel (BA)
with Square Rosette

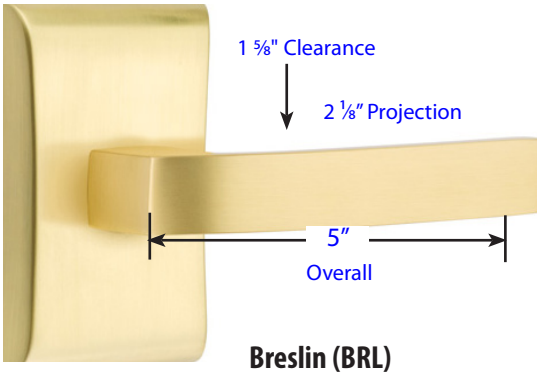

Breslin (BRL)
with Neos Rosette

See page 7 for rosette specification.

Door Thickness Specifications

- Standard Door Thickness: 1¼"- 2"
  Standard Components:
- Privacy Pin (for privacy sets)
- Inside Passage Half Spindle
- 1½" Rosette Screws
- Full-Lip Strike Plate

- Extended Door Thickness: 2"- 2½"
  Extended Components:
- Privacy Pin w/ Extension (for privacy sets)
- Long Inside Passage Half Spindle
- 2" Rosette Screws
- Extended Full-Lip Strike Plate

- Extended Door Thickness: 2½"- 3"
  Extended Components:
- Privacy Pin w/ Extension (for privacy sets)
- Extra Long Inside Passage Half Spindle
- 2½" Rosette Screws
- Extended Full-Lip Strike Plate

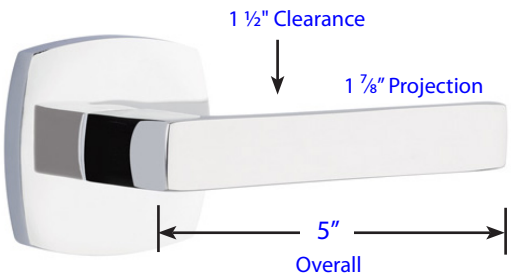

Dumont (DT)
with Urban Modern Rosette

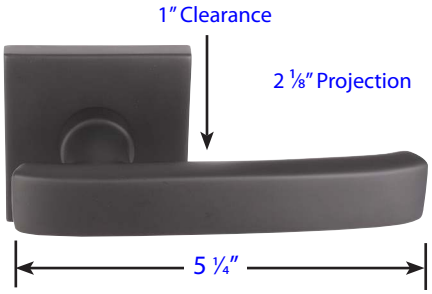

Geneva (GV)
with Square Rosette

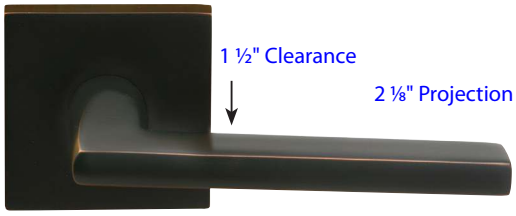

Helios (HLO)
with Square Rosette

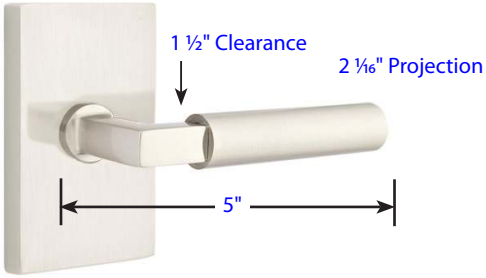

Hercules (HEC)
with Modern Rectangular Rosette

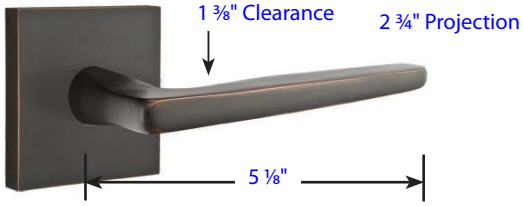

Hermes (HER)
with Square Rosette

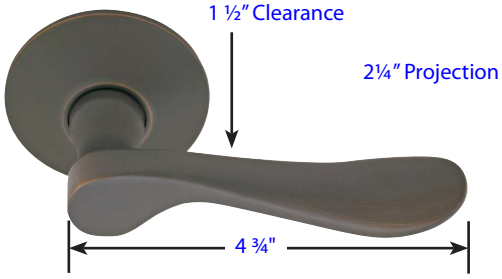

Luzern (LU)
with Modern Rosette

See page 7 for rosette specification.

Door Thickness Specifications

- Standard Door Thickness: 1¼"- 2"
  Standard Components:
- Privacy Pin (for privacy sets)
- Inside Passage Half Spindle
- 1½" Rosette Screws
- Full-Lip Strike Plate

- Extended Door Thickness: 2"- 2½"
  Extended Components:
- Privacy Pin w/ Extension (for privacy sets)
- Long Inside Passage Half Spindle
- 2" Rosette Screws
- Extended Full-Lip Strike Plate

- Extended Door Thickness: 2½"- 3"
  Extended Components:
- Privacy Pin w/ Extension (for privacy sets)
- Extra Long Inside Passage Half Spindle
- 2½" Rosette Screws
- Extended Full-Lip Strike Plate

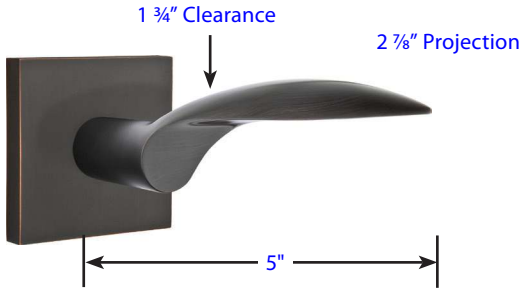

Mercury (MC)
with Square Rosette

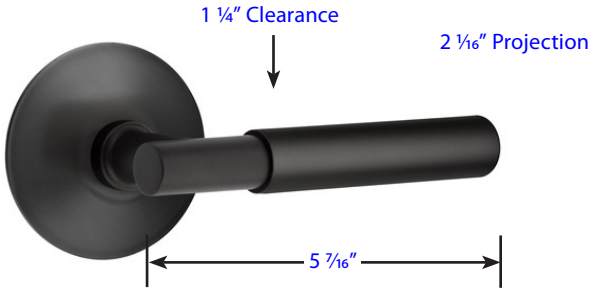

Myles (MYL)
with Modern Rosette

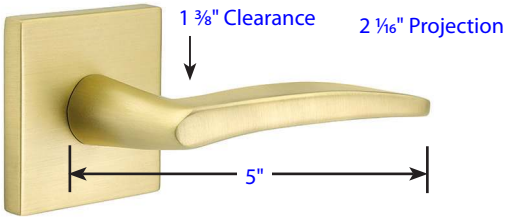

Poseidon (POS)
with Square Rosette

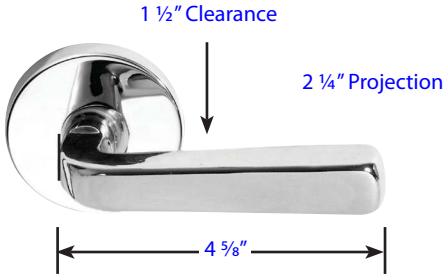

Sion (SIO)
with Disk Rosette

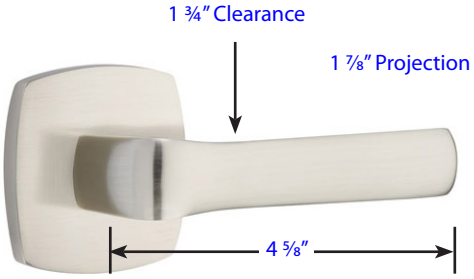

Spencer (SPN)
with Urban Modern Rosette

Stuttgart (STU)
with Disk Rosette

See page 7 for rosette specification.

Door Thickness Specifications

- Standard Door Thickness: 1¼"- 2"
  Standard Components:
- Privacy Pin (for privacy sets)
- Inside Passage Half Spindle
- 1½" Rosette Screws
- Full-Lip Strike Plate

- Extended Door Thickness: 2"- 2½"
  Extended Components:
- Privacy Pin w/ Extension (for privacy sets)
- Long Inside Passage Half Spindle
- 2" Rosette Screws
- Extended Full-Lip Strike Plate

- Extended Door Thickness: 2½"- 3"
  Extended Components:
- Privacy Pin w/ Extension (for privacy sets)
- Extra Long Inside Passage Half Spindle
- 2½" Rosette Screws
- Extended Full-Lip Strike Plate

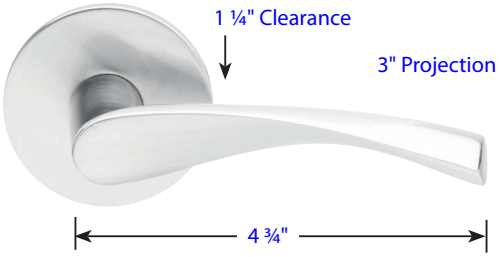

Triton (TRT)
with Disk Rosette

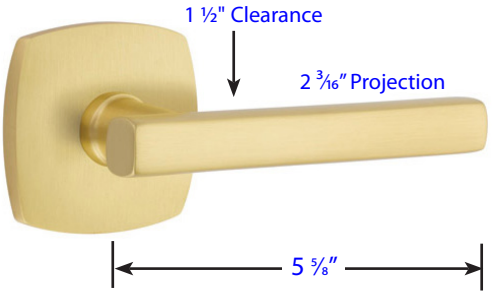

Urban Modern Freestone (FRL)
with Urban Modern Rosette

Rosettes

3⁄8" Thick

Disk

2½" Dia.

Urban Modern

2½" x 2½"

Quincy

2½" x 2½"

Modern Rectangular

2½" x 4"

Oval Stretto

1½" x 3"

Square

2½" x 2½"

Watford

2½" Dia.

Stretto

1½" x 5"

7⁄16" Thick

Wilshire

3" x 2½"

½" Thick

Modern

2¾" Dia.

Neos

2⅝" x 4"

Door Thickness Specifications

- Standard Door Thickness: 1¼"- 2"
  Standard Components:
- Privacy Pin (for privacy sets)
- Inside Passage Half Spindle
- 1½" Rosette Screws
- Full-Lip Strike Plate

- Extended Door Thickness: 2"- 2½"
  Extended Components:
- Privacy Pin w/ Extension (for privacy sets)
- Long Inside Passage Half Spindle
- 2" Rosette Screws
- Extended Full-Lip Strike Plate

- Extended Door Thickness: 2½"- 3"
  Extended Components:
- Privacy Pin w/ Extension (for privacy sets)
- Extra Long Inside Passage Half Spindle
- 2½" Rosette Screws
- Extended Full-Lip Strike Plate

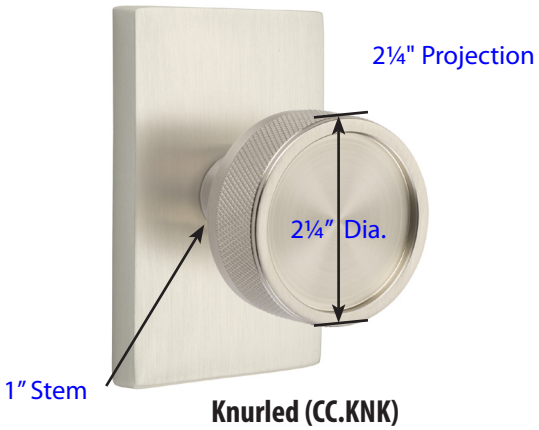

Knurled (CC.KNK)
with Modern Rectangular Rosette

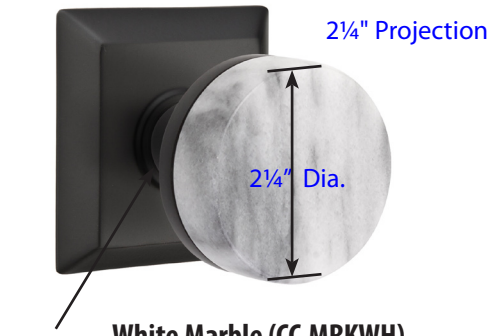

White Marble (CC.MRKWH)
with Quincy Rosette

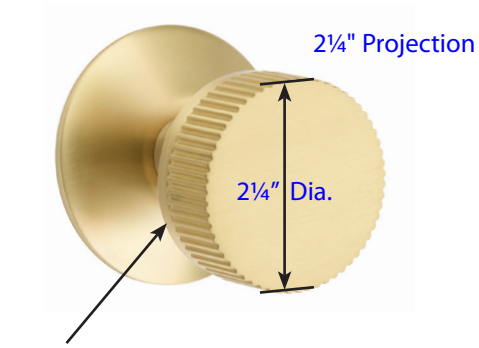

Straight Knurled (CC.SKK)
with Modern Rosette

Dark Walnut (CC.WNKWD)
with Urban Modern Rosette

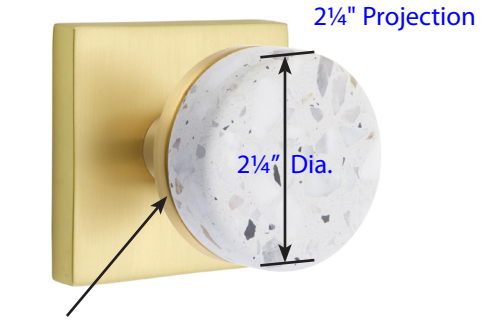

Terrazzo (CC.TZLT)
with Modern Rosette

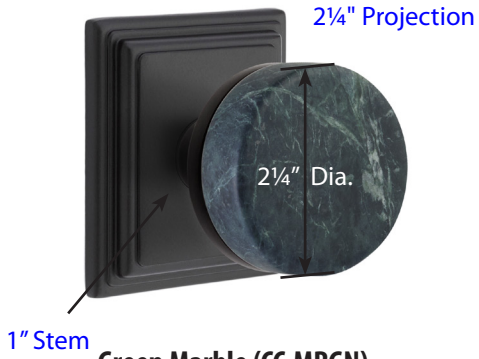

Green Marble (CC.MRGN)
with Wilshire Rosette

See page 7 for rosette specification.

Door Thickness Specifications

- Standard Door Thickness: 1¼"- 2"
  Standard Components:
- Privacy Pin (for privacy sets)
- Inside Passage Half Spindle
- 1½" Rosette Screws
- Full-Lip Strike Plate

- Extended Door Thickness: 2"- 2½"
  Extended Components:
- Privacy Pin w/ Extension (for privacy sets)
- Long Inside Passage Half Spindle
- 2" Rosette Screws
- Extended Full-Lip Strike Plate

- Extended Door Thickness: 2½"- 3"
  Extended Components:
- Privacy Pin w/ Extension (for privacy sets)
- Extra Long Inside Passage Half Spindle
- 2½" Rosette Screws
- Extended Full-Lip Strike Plate

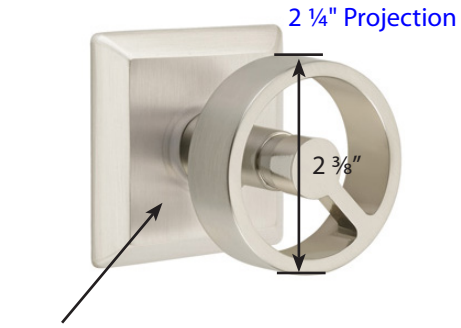

Spoke (SPK)
with Quincy Rosette

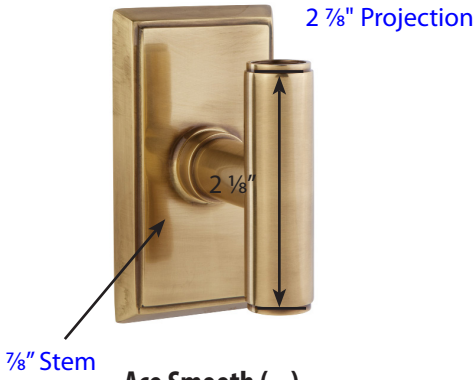

Ace Smooth ( )
with _____ Rosette

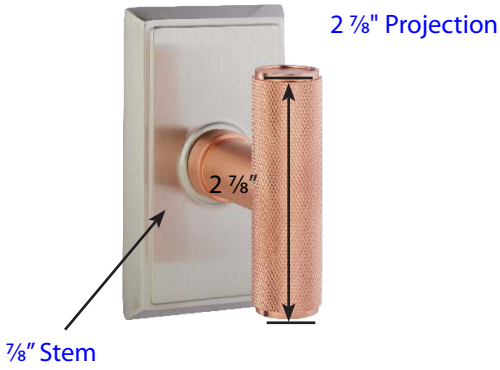

Ace Knurled ( )
with _____ Rosette

See page ____ for rosette specification.

Door Thickness Specifications

- Standard Door Thickness: 1¼"- 1¾"
  Standard Components:
- Privacy Pin (for privacy sets)
- Inside Passage Half Spindle
- 1½" Rosette Screws
- Full-Lip Strike Plate

- Extended Door Thickness: 1⅞"- 2½"
  Extended Components:
- See priv pin table (for privacy sets)
- Long Inside Passage Half Spindle
- 2" Rosette Screws & 2½" Rosette Screws
- Extended Full-Lip Strike Plate

- Extended Door Thickness: 2⅝"- 3"
  Extended Components:
- See priv pin table (for privacy sets)
- Extra Long Inside Passage Half Spindle
- 2½" Rosette Screws
- Extended Full-Lip Strike Plate

Bern (BN)
with Square Rosette

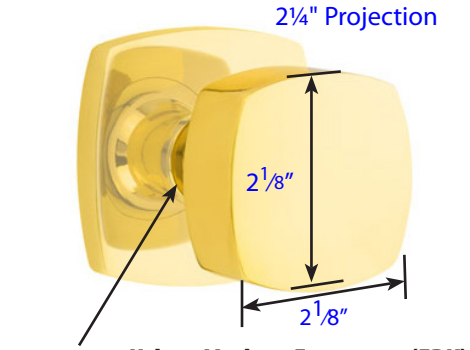

Urban Modern Freestone (FRK)
with Urban Modern Rosette

Laurent (LAU)
with Modern Rectangular Rosette

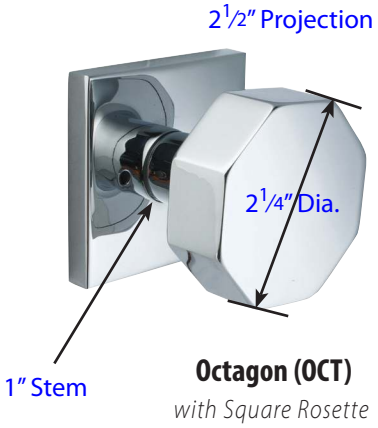

Octagon (OCT)
with Square Rosette

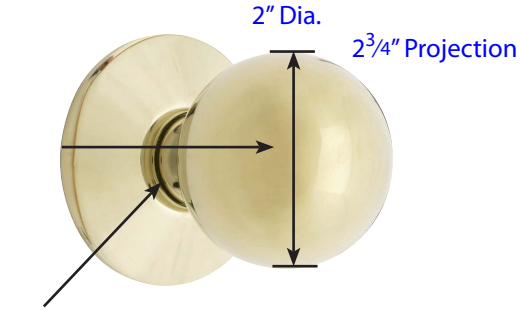

Orb (OR)
with Modern Rosette

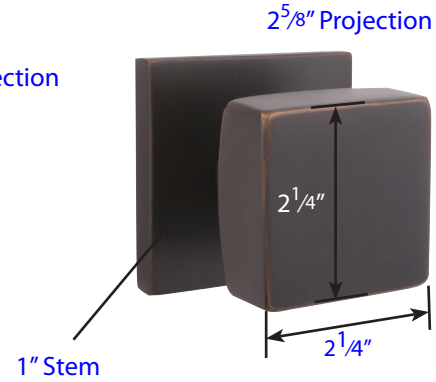

Square (SQU)
with Square Rosette

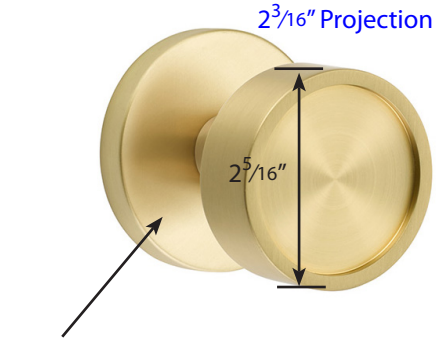

Verve (VR)
with Disk Rosette

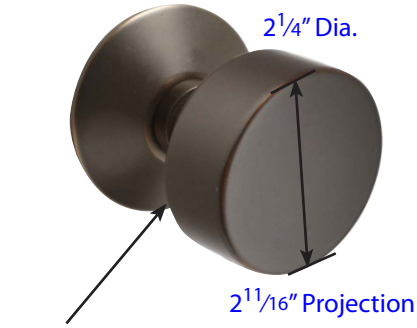

Round (ROU)
with Modern Rosette

See page 7 for rosette specification.

Door Thickness Specifications

- Standard Door Thickness: 1¼"- 2"
  Standard Components:
- Privacy Pin (for privacy sets)
- Inside Passage Half Spindle
- 1½" Rosette Screws
- Full-Lip Strike Plate

- Extended Door Thickness: 2"- 2½"
  Extended Components:
- Privacy Pin w/ Extension (for privacy sets)
- Long Inside Passage Half Spindle
- 2" Rosette Screws
- Extended Full-Lip Strike Plate

- Extended Door Thickness: 2½"- 3"
  Extended Components:
- Privacy Pin w/ Extension (for privacy sets)
- Extra Long Inside Passage Half Spindle
- 2½" Rosette Screws
- Extended Full-Lip Strike Plate

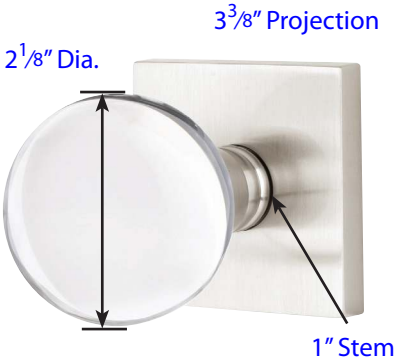

Bristol - Modern (BL)
with Square Rosette

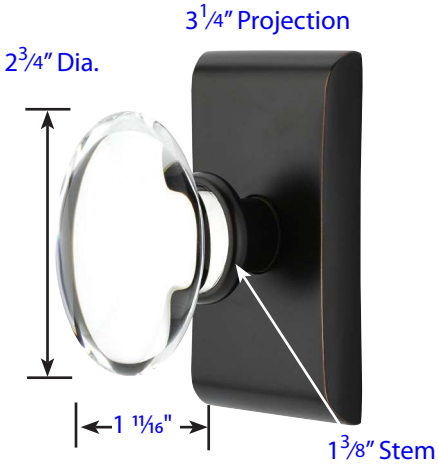

Hampton - Modern (HT)
with Neos Rosette

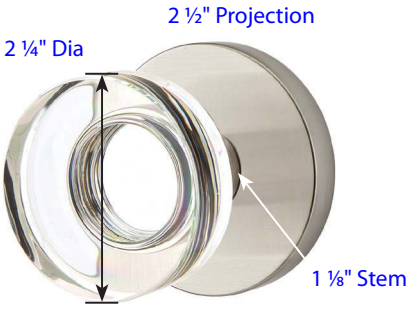

Modern Disc Crystal (MDC)
with Disk Rosette

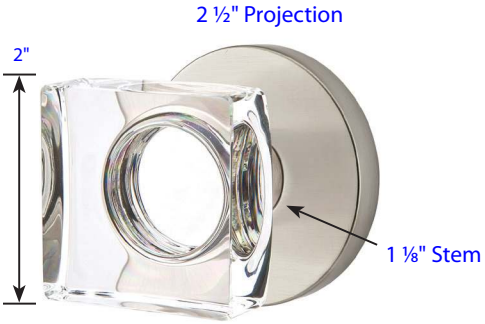

Modern Square Crystal (MSC)
with Disk Rosette

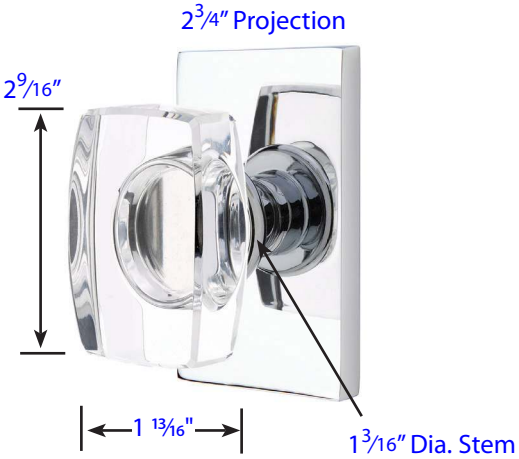

Windsor - Modern (WS)
with Modern Rectangular Rosette

See page 7 rosette specification.

Door Thickness Specifications

- Standard Door Thickness: 1¼"- 2"

Standard Components:
- Privacy Pin (for privacy sets)
- Inside Passage Half Spindle
- 1-1⁄2" Rosette Screws
- Full-Lip Strike Plate

- *Extended* Door Thickness: 2"- 2½"

Extended Components:
- Privacy Pin w/ Extension (for privacy sets)
- Long Inside Passage Half Spindle
- 2" Rosette Screws
- Extended Full-Lip Strike Plate

- *Extended* Door Thickness: 2½"- 3"

Extended Components:
- Privacy Pin w/ Extension (for privacy sets)
- Extra Long Inside Passage Half Spindle
- 2-1⁄2" Rosette Screws
- Extended Full-Lip Strike Plate

Athena (AT)
with Square Rosette

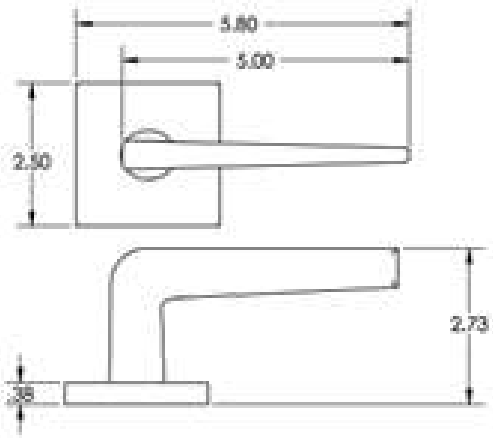

Clearance 1½"

Cologne (CO)
with Disk Rosette

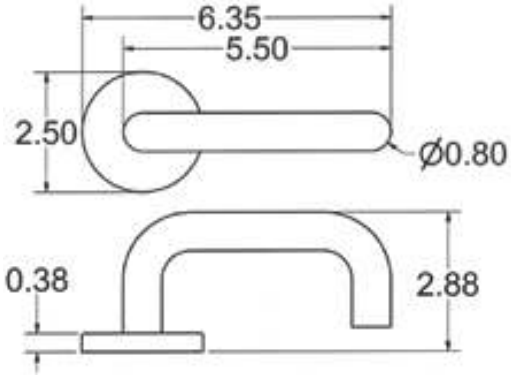

Clearance 1⅝"

Dresden (DD)
with Square Rosette

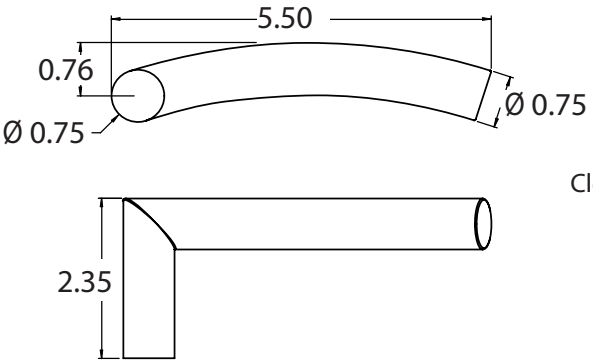

Clearance 1⁹⁄₁₆"

See page 16 for rosette specification.

Door Thickness Specifications

- Standard Door Thickness: 1⅜"- 2"

Standard Components:
- Privacy Pin (for privacy sets)
- Inside Passage Half Spindle
- 1½" Socket Head Machine Screws
- Full-Lip Strike Plate

- *Extended* Door Thickness: 2"- 2½"

Extended Components:
- Privacy Pin w/ Extension (for privacy sets)
- Long Inside Passage Half Spindle
- 2" Socket Head Machine Screws
- Extended Full-Lip Strike Plate

- *Extended* Door Thickness: 2½"- 2¾"

Extended Components:
- Privacy Pin w/ Extension (for privacy sets)
- Long Inside Passage Half Spindle
- 2½" Socket Head Machine Screws
- Extended Full-Lip Strike Plate

Helios (HL)
with Square Rosette

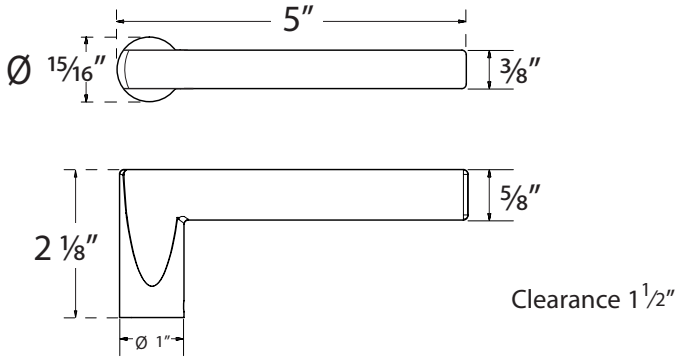

Hercules (HS)
with Square Rosette

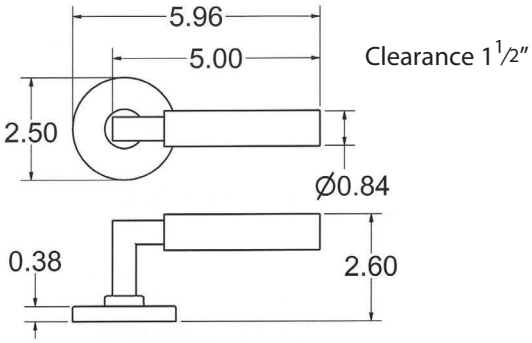

Hermes (HES)
with Beveled Rosette

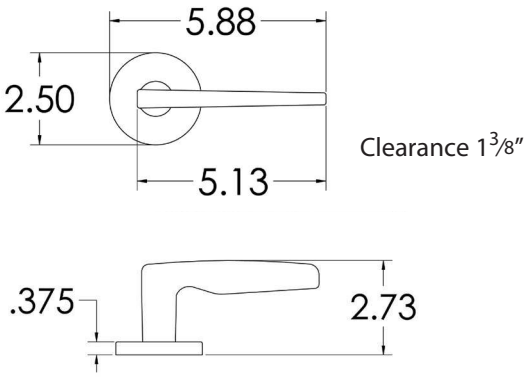

See page 16 for rosette specification.

Door Thickness Specifications

- Standard Door Thickness: 1 3⁄8”- 2”

Standard Components:
- Privacy Pin (for privacy sets)
- Inside Passage Half Spindle
- 1 1⁄2” Socket Head Machine Screws
- Full-Lip Strike Plate

- *Extended* Door Thickness: 2”- 2 1⁄2”

Extended Components:
- Privacy Pin w/ Extension (for privacy sets)
- Long Inside Passage Half Spindle
- 2” Socket Head Machine Screws
- Extended Full-Lip Strike Plate

- *Extended* Door Thickness: 2 1⁄2”- 2 3⁄4”

Extended Components:
- Privacy Pin w/ Extension (for privacy sets)
- Long Inside Passage Half Spindle
- 2 1⁄2” Socket Head Machine Screws
- Extended Full-Lip Strike Plate

Kiel (KL)
with Square Rosette

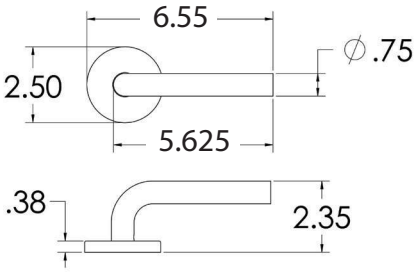

Clearance:1¼"

Poseidon (PO)
with Square Rosette

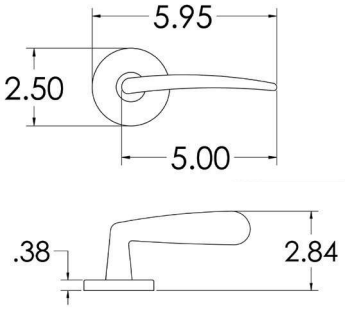

Clearance:1⅜"

Stuttgart (STT)
with Disk Rosette

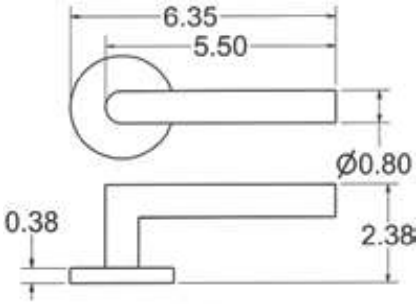

Clearance: 1¼"

See page 16 for rosette specification.

Door Thickness Specifications

- Standard Door Thickness: 1 3/8"- 2"

Standard Components:
- Privacy Pin (for privacy sets)
- Inside Passage Half Spindle
- 1 1/2" Socket Head Machine Screws
- Full-Lip Strike Plate

- *Extended* Door Thickness: 2"- 2 1/2"

Extended Components:
- Privacy Pin w/ Extension (for privacy sets)
- Long Inside Passage Half Spindle
- 2" Socket Head Machine Screws
- Extended Full-Lip Strike Plate

- *Extended* Door Thickness: 2 1/2"- 2 3/4"

Extended Components:
- Privacy Pin w/ Extension (for privacy sets)
- Long Inside Passage Half Spindle
- 2 1/2" Socket Head Machine Screws
- Extended Full-Lip Strike Plate

Functions:

Passage: Lever operates from either side of door.

Privacy: Push button on the interior engages privacy. Turning the inside lever releases privacy and retracts latchbolt.

Dummy Pair: Surface mounted on threaded spindle. Requires no door prep.

Door Prep Specifications:

- Fits standard door prep--2⅛" face bore & 1" edge bore.
- Fits a range of door thickness from 1⅜" to 2". Thicker doors--please specify.

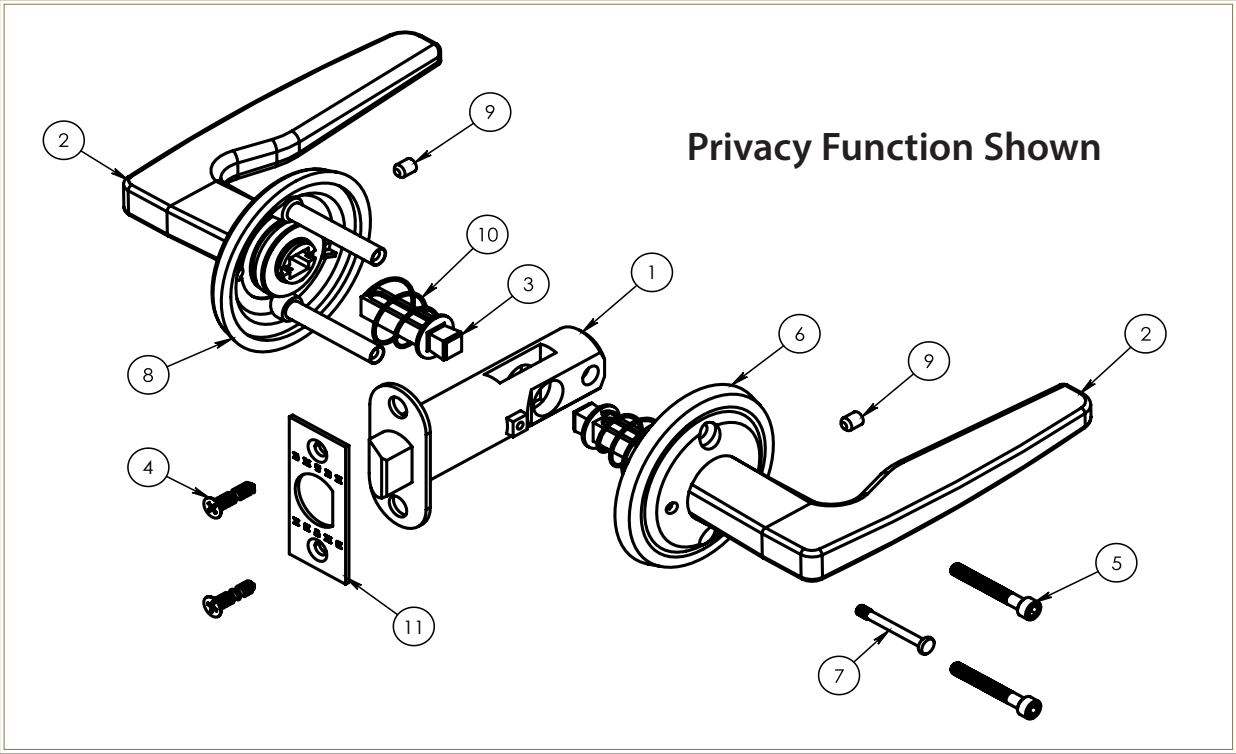

Latches:

- 28º retraction
- 8mm hub
- Split spindles
- 2⅜" backset standard
- 2¾" backset available--please specify
- Brass nosebolt

Strike & Face Plates:

- Strike Plate--1½"W x 2¼"H
- Face Plate--1"W x 2¼"H
- Full Lip strike is standard
- "T" strike optional--please specify
- Strike & faceplates are square cornered

Legend

1) Latch (Passage/Privacy)
2) Lever Handles
3) Spindles
4) Face Plate Wood Screws
5) Socket Hex Head Machine Screws
6) Inside Rosette
7) Privacy Pin (for Privacy Sets)
8) Outside Rosette
9) Set Screws
10) Spindle Spring
11) Latch Face Plate

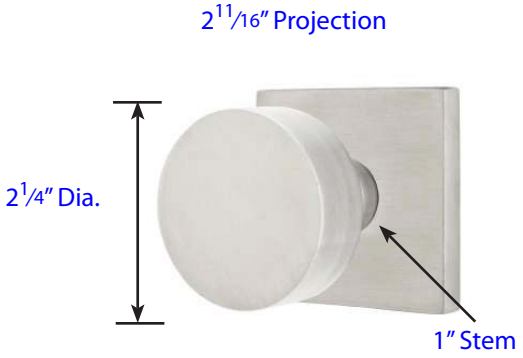

Round (RNK)
with Square Rosette

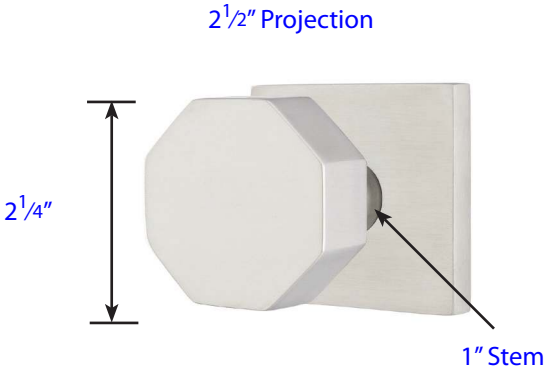

Octagon (OK)
with Square Rosette

Rosettes

3/8" Thick

Beveled
DISCONTINUED

2 7/16" Dia.

Disk

2 1/2" Dia.

Square

2 1/2" x 2 1/2"

Door Thickness Specifications

- Standard Door Thickness: 1 3/8"- 2"

Standard Components:
- Privacy Pin (for privacy sets)
- Inside Passage Half Spindle
- 1 1/4" Socket Head Machine Screws
- Full-Lip Strike Plate

- *Extended* Door Thickness: 2"- 2 1/2"

Extended Components:
- Privacy Pin w/ Extension (for privacy sets)
- Long Inside Passage Half Spindle
- 2" Socket Head Machine Screws
- Extended Full-Lip Strike Plate

- *Extended* Door Thickness: 2 1/2"- 2 3/4"

Extended Components:
- Privacy Pin w/ Extension (for privacy sets)
- Long Inside Passage Half Spindle
- 2 1/2" Socket Head Machine Screws
- Extended Full-Lip Strike Plate

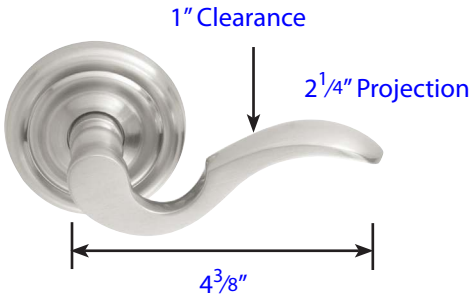

Cortina (C)
with Regular Rosette

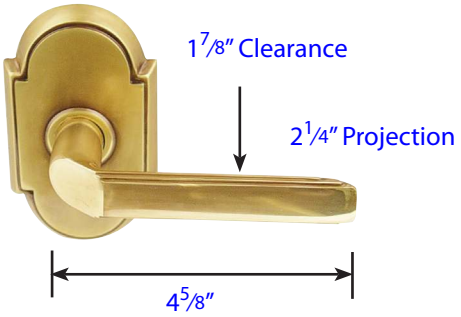

Milano (M)
with #8 Rosette

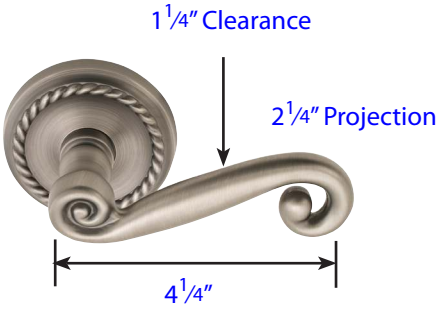

Rustic (R)
with Rope Rosette

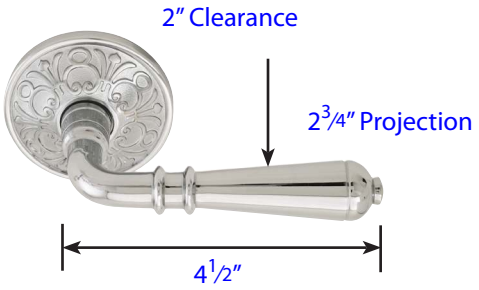

Turino (T)
with Lancaster Rosette

See page 19 for rosette specification.

Door Thickness Specifications

- Standard Door Thickness: 1¼″- 2″
  Standard Components:
- Privacy Pin (for privacy sets)
- Inside Passage Half Spindle
- 1½″ Rosette Screws
- Full-Lip Strike Plate

- Extended Door Thickness: 2″- 2½″
  Extended Components:
- Privacy Pin w/ Extension (for privacy sets)
- Long Inside Passage Half Spindle
- 2″ Rosette Screws
- Extended Full-Lip Strike Plate

- Extended Door Thickness: 2½″- 3″
  Extended Components:
- Privacy Pin w/ Extension (for privacy sets)
- Extra Long Inside Passage Half Spindle
- 2½″ Rosette Screws
- Extended Full-Lip Strike Plate

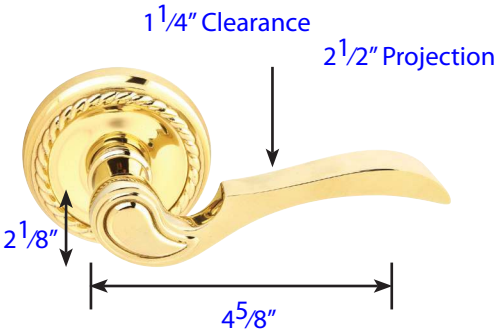

Coventry (CV)
with Rope Rosette

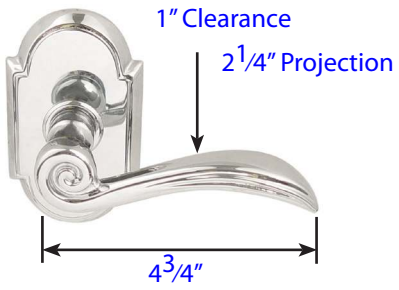

Elan (EN)
with #8 Rosette

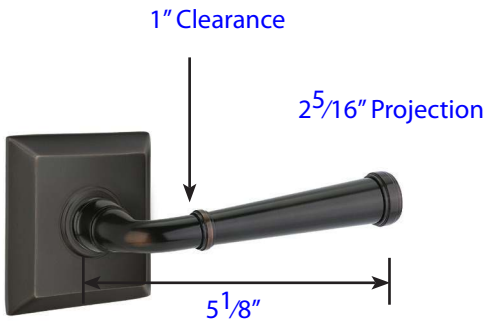

Merrimack (ME)
with Quincy Rosette

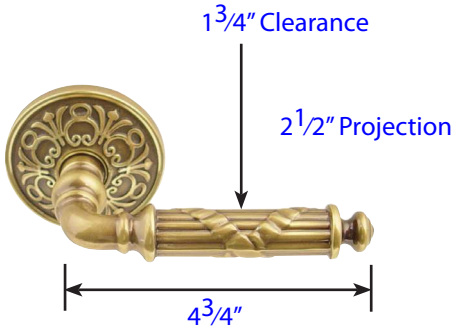

Ribbon & Reed (RBL)
with Lancaster Rosette

See page 19 for rosette specification.

Door Thickness Specifications

- Standard Door Thickness: 1¼"- 2"
  Standard Components:
- Privacy Pin (for privacy sets)
- Inside Passage Half Spindle
- 1½" Rosette Screws
- Full-Lip Strike Plate

- Extended Door Thickness: 2"- 2½"
  Extended Components:
- Privacy Pin w/ Extension (for privacy sets)
- Long Inside Passage Half Spindle
- 2" Rosette Screws
- Extended Full-Lip Strike Plate

- Extended Door Thickness: 2½"- 3"
  Extended Components:
- Privacy Pin w/ Extension (for privacy sets)
- Extra Long Inside Passage Half Spindle
- 2½" Rosette Screws
- Extended Full-Lip Strike Plate

Rope (RL)
with Rope Rosette

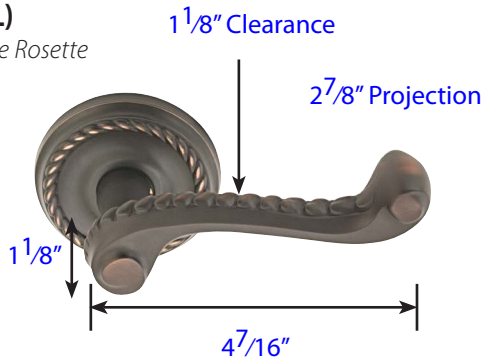

Santa Fe (SF)
with Regular Rosette

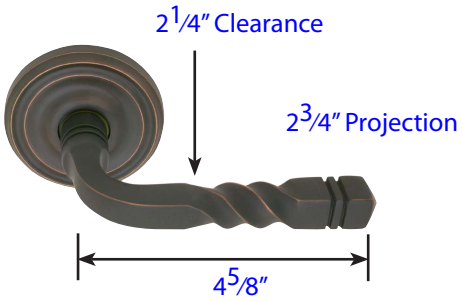

Wembley (WM)
with Regular Rosette

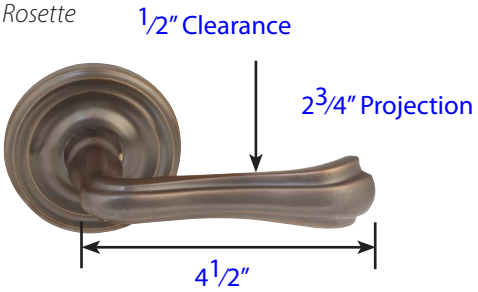

Rosettes

3/8" Thick

Regular

2 3/4" Dia.

Rope

2 3/4" Dia.

Rectangular

4 3/8" x 2 9/16"

Quincy

2 1/2" x 2 1/2"

Lancaster

2 3/4" Dia.

Ribbon & Reed

2 3/4" Dia.

#8

4 3/8" x 2 9/16"

7/16" Thick

Oval

4 1/2" x 2 1/2"

Wilshire

3" x 2 1/2"

Hammered

2 3/4" x 2 3/4"

Porcelain

2 1/2" x 2 1/2"

1/2" Thick

Arts & Crafts
Rectangular

4" x 2 1/2"

Door Thickness Specifications

- Standard Door Thickness: 1 1/4"- 2"
  Standard Components:
- Privacy Pin (for privacy sets)
- Inside Passage Half Spindle
- 1 1/2" Rosette Screws
- Full-Lip Strike Plate

- Extended Door Thickness: 2"- 2 1/2"
  Extended Components:
- Privacy Pin w/ Extension (for privacy sets)
- Long Inside Passage Half Spindle
- 2" Rosette Screws
- Extended Full-Lip Strike Plate

- Extended Door Thickness: 2 1/2"- 3"
  Extended Components:
- Privacy Pin w/ Extension (for privacy sets)
- Extra Long Inside Passage Half Spindle
- 2 1/2" Rosette Screws
- Extended Full-Lip Strike Plate

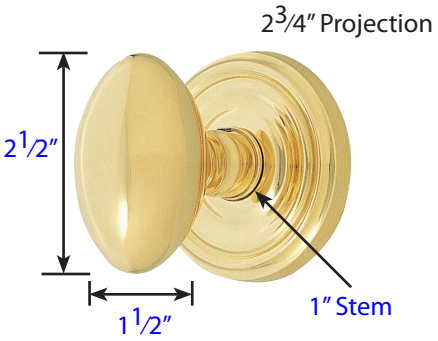

Egg (E)
with Regular Rosette

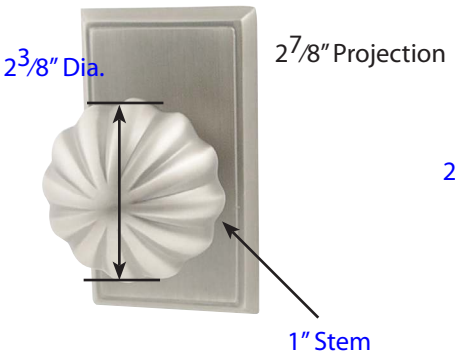

Melon (MN)
with Rectangular Rosette

Norwich (NW)
with #8 Rosette

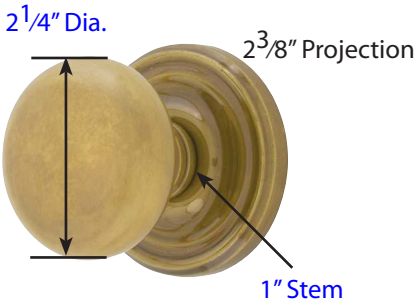

Providence (P)
with Regular Rosette

Waverly (W)
with Regular Rosette

See page 19 for rosette specification.

Door Thickness Specifications

- Standard Door Thickness: 1¼"- 2"
  Standard Components:
- Privacy Pin (for privacy sets)
- Inside Passage Half Spindle
- 1½" Rosette Screws
- Full-Lip Strike Plate

- Extended Door Thickness: 2"- 2½"
  Extended Components:
- Privacy Pin w/ Extension (for privacy sets)
- Long Inside Passage Half Spindle
- 2" Rosette Screws
- Extended Full-Lip Strike Plate

- Extended Door Thickness: 2½"- 3"
  Extended Components:
- Privacy Pin w/ Extension (for privacy sets)
- Extra Long Inside Passage Half Spindle
- 2½" Rosette Screws
- Extended Full-Lip Strike Plate

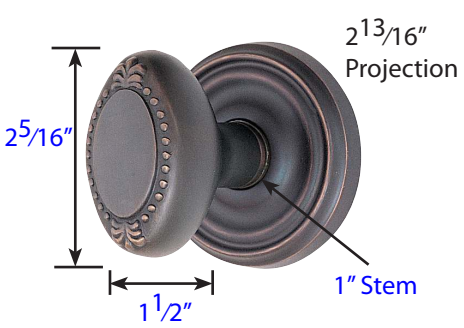

Beaded Egg (BE)
with Regular Rosette

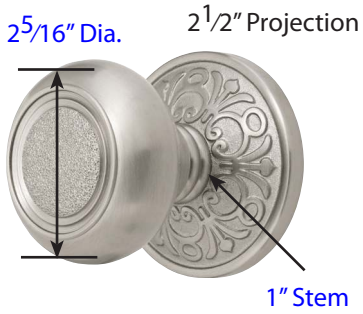

Belmont (BT)
with Lancaster Rosette

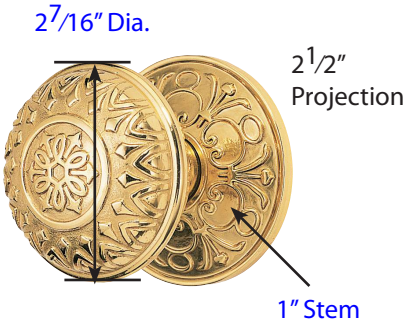

Lancaster (LN)
with Lancaster Rosette

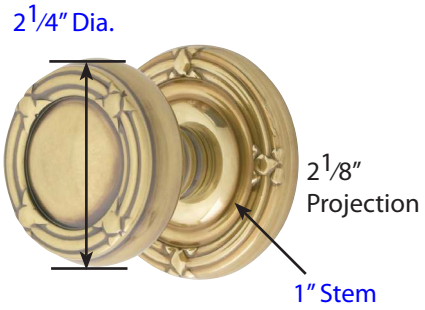

Ribbon & Reed (RBK)
with Ribbon & Reed Rosette

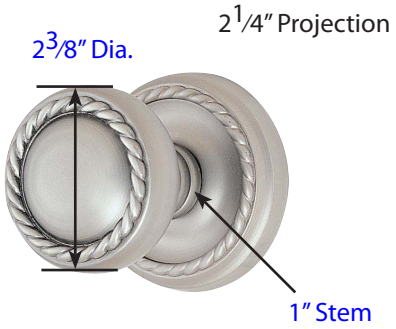

Rope (RK)
with Rope Rosette

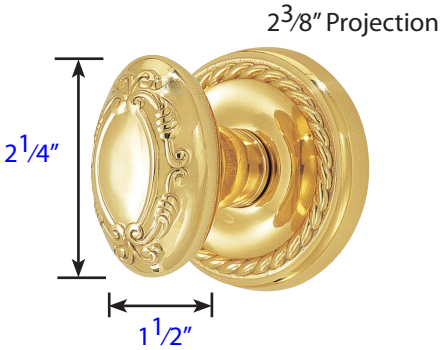

Victoria (V)
with Rope Rosette

See page 19 for rosette specification.

Door Thickness Specifications

- Standard Door Thickness: 1¼″- 2″
  Standard Components:
- Privacy Pin (for privacy sets)
- Inside Passage Half Spindle
- 1½″ Rosette Screws
- Full-Lip Strike Plate

- Extended Door Thickness: 2″- 2½″
  Extended Components:
- Privacy Pin w/ Extension (for privacy sets)
- Long Inside Passage Half Spindle
- 2″ Rosette Screws
- Extended Full-Lip Strike Plate

- Extended Door Thickness: 2½″- 3″
  Extended Components:
- Privacy Pin w/ Extension (for privacy sets)
- Extra Long Inside Passage Half Spindle
- 2½″ Rosette Screws
- Extended Full-Lip Strike Plate

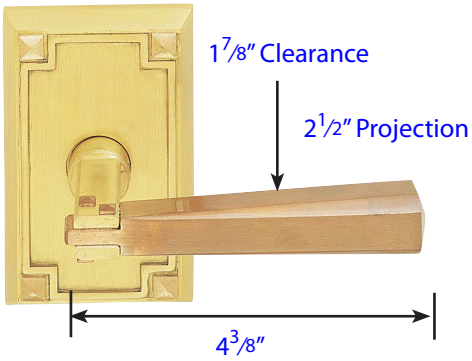

Arts & Crafts (AC)
with Arts & Crafts Rectangular Rosette

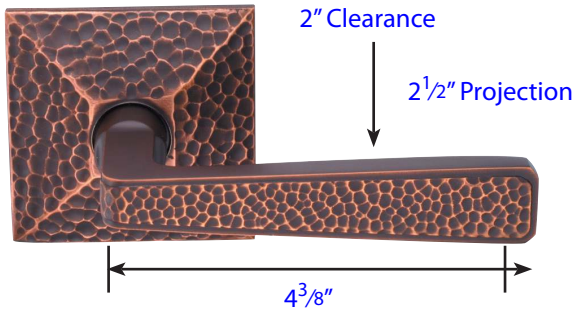

Hammered (HM)
with Hammered Rosette

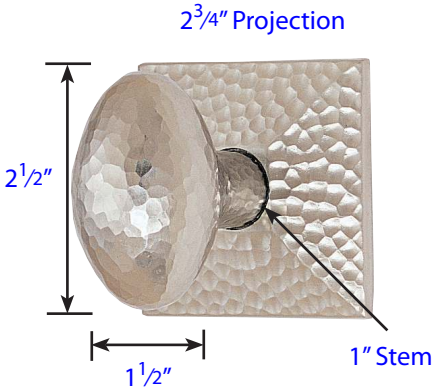

Hammered Egg (HE)
with Hammered Rosette

See page 19 for rosette specification.

Door Thickness Specifications

- Standard Door Thickness: 1¼"- 2"
  Standard Components:
- Privacy Pin (for privacy sets)
- Inside Passage Half Spindle
- 1½" Rosette Screws
- Full-Lip Strike Plate

- Extended Door Thickness: 2"- 2½"
  Extended Components:
- Privacy Pin w/ Extension (for privacy sets)
- Long Inside Passage Half Spindle
- 2" Rosette Screws
- Extended Full-Lip Strike Plate

- Extended Door Thickness: 2½"- 3"
  Extended Components:
- Privacy Pin w/ Extension (for privacy sets)
- Extra Long Inside Passage Half Spindle
- 2½" Rosette Screws
- Extended Full-Lip Strike Plate

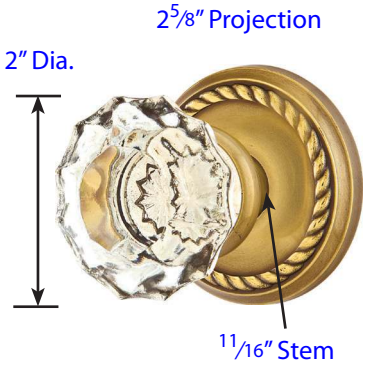

Astoria Clear (AS)
with Rope Rosette

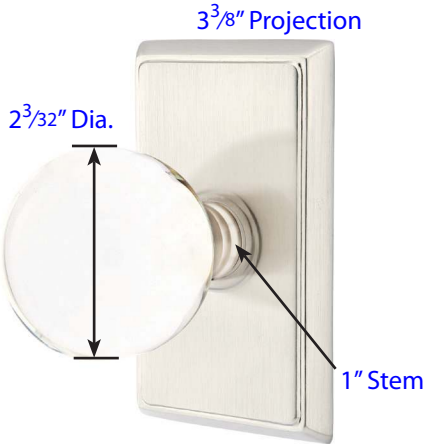

Bristol (BL)
with Rectangular Rosette

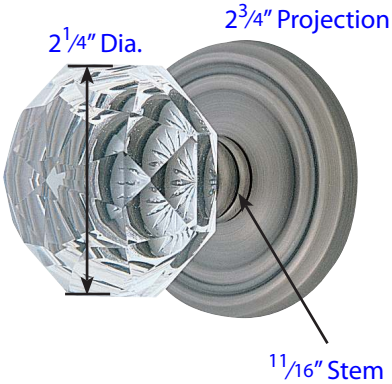

Diamond (CK)
with Regular Rosette

Georgetown (GT)
with Lancaster Rosette

See page 19 for rosette specification.

Door Thickness Specifications

- Standard Door Thickness: 1¼"- 2"
  Standard Components:
- Privacy Pin (for privacy sets)
- Inside Passage Half Spindle
- 1½" Rosette Screws
- Full-Lip Strike Plate

- Extended Door Thickness: 2"- 2½"
  Extended Components:
- Privacy Pin w/ Extension (for privacy sets)
- Long Inside Passage Half Spindle
- 2" Rosette Screws
- Extended Full-Lip Strike Plate

- Extended Door Thickness: 2½"- 3"
  Extended Components:
- Privacy Pin w/ Extension (for privacy sets)
- Extra Long Inside Passage Half Spindle
- 2½" Rosette Screws
- Extended Full-Lip Strike Plate

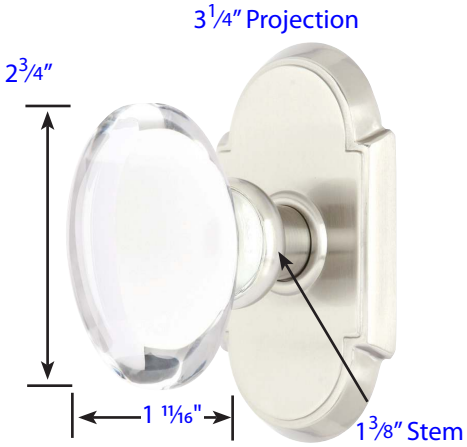

Hampton (HT)
with #8 Rosette

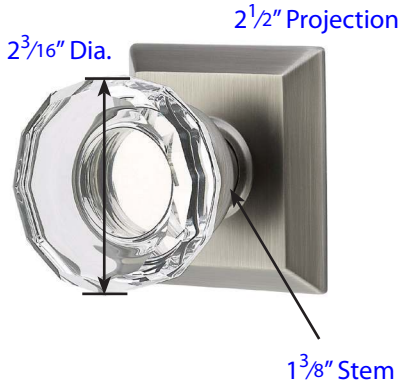

Lowell Crystal (LW)
with Quincy Rosette

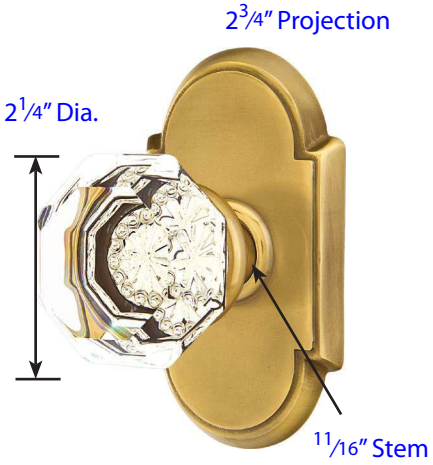

Old Town - Clear (OT)
with #8 Rosette

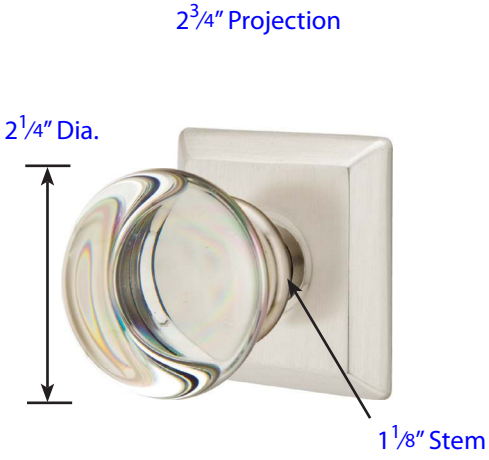

Providence Crystal (PC)
with Quincy Rosette

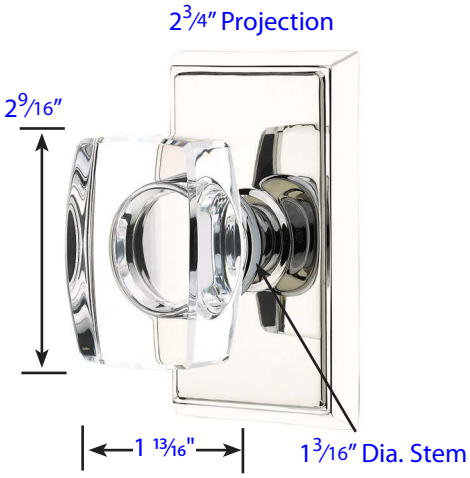

Windsor (WS)
with Rectangular Rosette

See page 19 for rosette specification.

Door Thickness Specifications

- Standard Door Thickness: 1¼"- 2"
  Standard Components:
- Privacy Pin (for privacy sets)
- Inside Passage Half Spindle
- 1½" Rosette Screws
- Full-Lip Strike Plate

- Extended Door Thickness: 2"- 2½"
  Extended Components:
- Privacy Pin w/ Extension (for privacy sets)
- Long Inside Passage Half Spindle
- 2" Rosette Screws
- Extended Full-Lip Strike Plate

- Extended Door Thickness: 2½"- 3"
  Extended Components:
- Privacy Pin w/ Extension (for privacy sets)
- Extra Long Inside Passage Half Spindle
- 2½" Rosette Screws
- Extended Full-Lip Strike Plate

PORCELAIN KNOBSETS WITH PORCELAIN ROSETTES

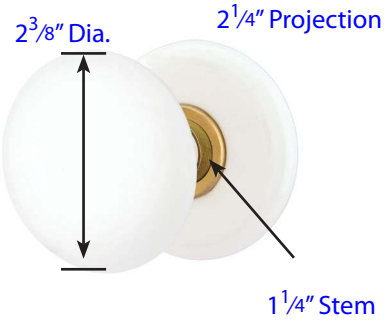

Ice White (IW)
with Porcelain Rosette

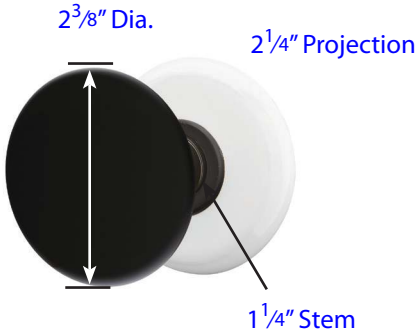

Ebony (EB)
with Porcelain Rosette

PORCELAIN KNOBSETS WITH BRASS ROSETTES

Ebony (EB)
with Ribbon & Reed Rosette

Ice White (IW)
with Regular Rosette

See page 19 for rosette specification.

Door Thickness Specifications

- Standard Door Thickness: 1¼"- 2"
  Standard Components:
- Privacy Pin (for privacy sets)
- Inside Passage Half Spindle
- 1½" Rosette Screws
- Full-Lip Strike Plate

- Extended Door Thickness: 2"- 2½"
  Extended Components:
- Privacy Pin w/ Extension (for privacy sets)
- Long Inside Passage Half Spindle
- 2" Rosette Screws
- Extended Full-Lip Strike Plate

- Extended Door Thickness: 2½"- 3"
  Extended Components:
- Privacy Pin w/ Extension (for privacy sets)
- Extra Long Inside Passage Half Spindle
- 2½" Rosette Screws
- Extended Full-Lip Strike Plate

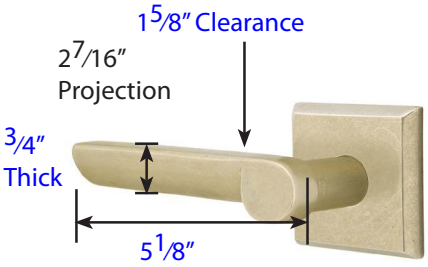

Aurora (AR)
with #6 Rosette

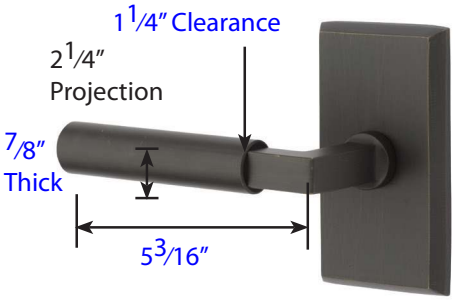

Bryce (BR)
with #3 Rosette

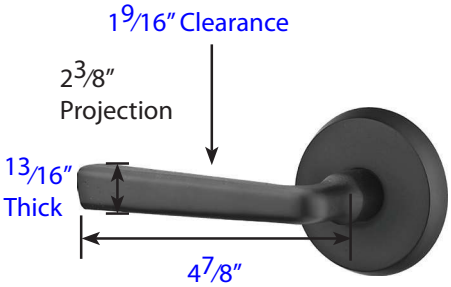

Cimarron (CR)
with #2 Rosette

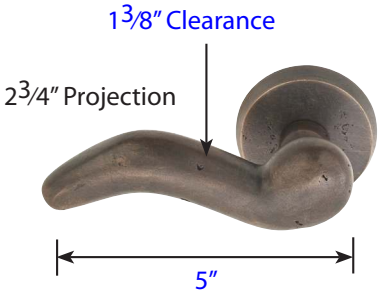

Cody (CD)
with #2 Rosette

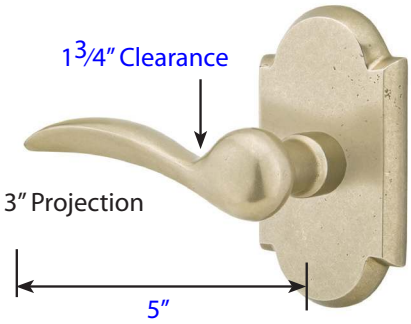

Durango (D)
with #1 Rosette

See page 28 for rosette specification.

Door Thickness Specifications

- Standard Door Thickness: 1¼"- 2"
  Standard Components:
- Privacy Pin (for privacy sets)
- Inside Passage Half Spindle
- 1½" Rosette Screws
- Full-Lip Strike Plate

- Extended Door Thickness: 2"- 2½"
  Extended Components:
- Privacy Pin w/ Extension (for privacy sets)
- Long Inside Passage Half Spindle
- 2" Rosette Screws
- Extended Full-Lip Strike Plate

- Extended Door Thickness: 2½"- 3"
  Extended Components:
- Privacy Pin w/ Extension (for privacy sets)
- Extra Long Inside Passage Half Spindle
- 2½" Rosette Screws
- Extended Full-Lip Strike Plate

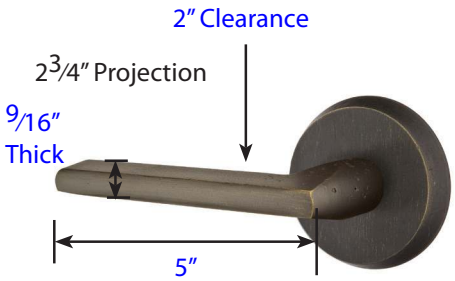

Lariat (LR)
with #2 Rosette

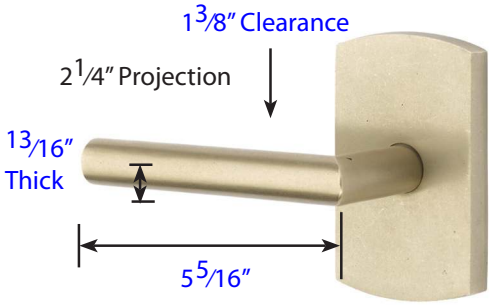

Mariposa (MA)
with #4 Rosette

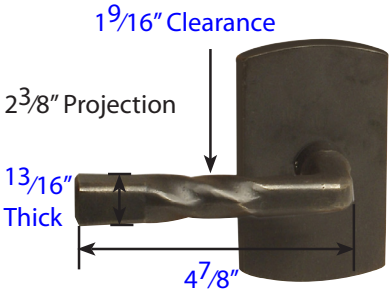

Montrose (MT)
with #4 Rosette

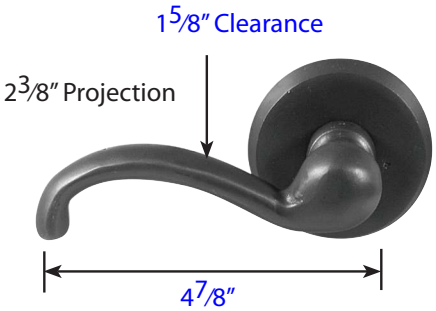

Teton (TT)
with #2 Rosette

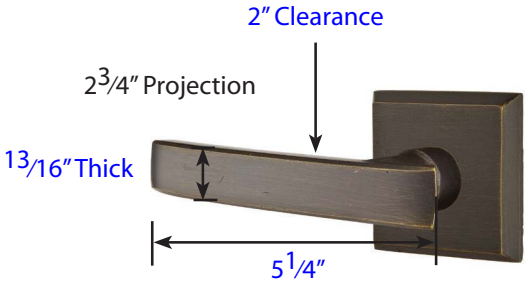

Yuma (YM)
with #6 Rosette

See page 28 for rosette specification.

Door Thickness Specifications

- Standard Door Thickness: 1¼″- 2″
  Standard Components:
- Privacy Pin (for privacy sets)
- Inside Passage Half Spindle
- 1½″ Rosette Screws
- Full-Lip Strike Plate

- Extended Door Thickness: 2″- 2½″
  Extended Components:
- Privacy Pin w/ Extension (for privacy sets)
- Long Inside Passage Half Spindle
- 2″ Rosette Screws
- Extended Full-Lip Strike Plate

- Extended Door Thickness: 2½″- 3″
  Extended Components:
- Privacy Pin w/ Extension (for privacy sets)
- Extra Long Inside Passage Half Spindle
- 2½″ Rosette Screws
- Extended Full-Lip Strike Plate

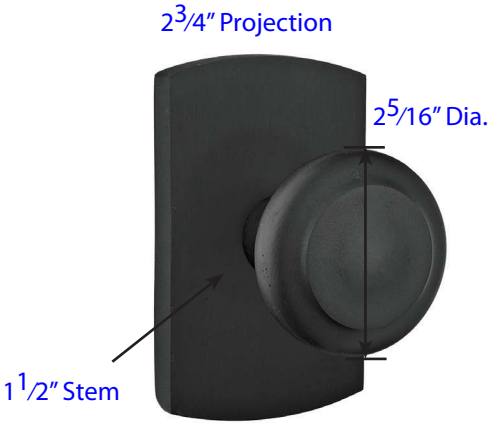

Butte (BU)
with #4 Rosette

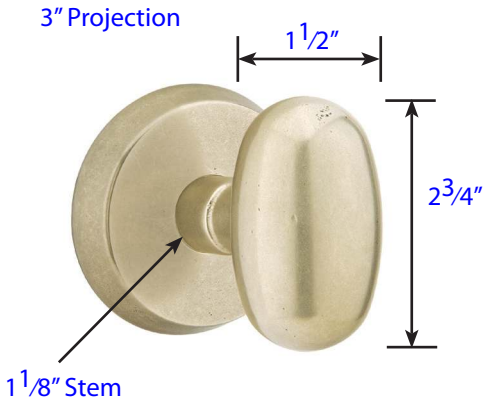

Bronze Egg (BZE)
with #2 Rosette

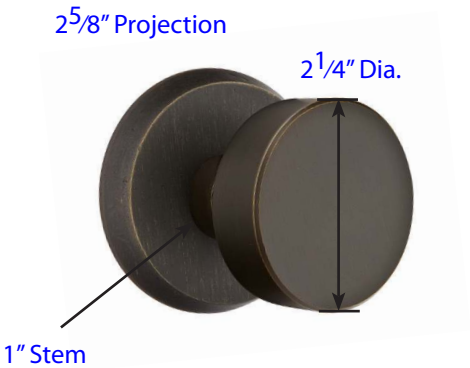

Round (BZRN)
with #2 Rosette

Winchester (WC)
with #2 Rosette

Rosettes

7/16" Thick

#1

4½" x 2½"

#2

2¾" Dia.

#3

4½" x 2½"

½" Thick

#4

4½" x 2 13/16"

7/16" Thick

#6

2½" x 2½"

Door Thickness Specifications

- Standard Door Thickness: 1¼"- 2"
  Standard Components:
- Privacy Pin (for privacy sets)
- Inside Passage Half Spindle
- 1½" Rosette Screws
- Full-Lip Strike Plate

- Extended Door Thickness: 2"- 2½"
  Extended Components:
- Privacy Pin w/ Extension (for privacy sets)
- Long Inside Passage Half Spindle
- 2" Rosette Screws
- Extended Full-Lip Strike Plate

- Extended Door Thickness: 2½"- 3"
  Extended Components:
- Privacy Pin w/ Extension (for privacy sets)
- Extra Long Inside Passage Half Spindle
- 2½" Rosette Screws
- Extended Full-Lip Strike Plate

Astoria (AS)
with #6 Rosette

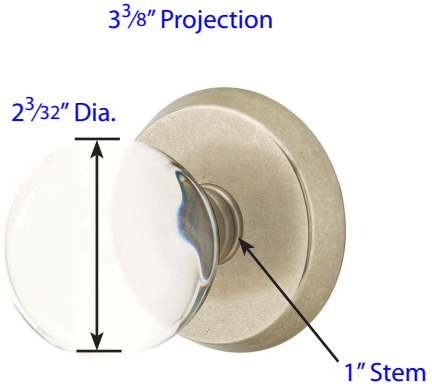

Bristol (BL)
with #2 Rosette

Diamond Crystal (CK)
with #3 Rosette

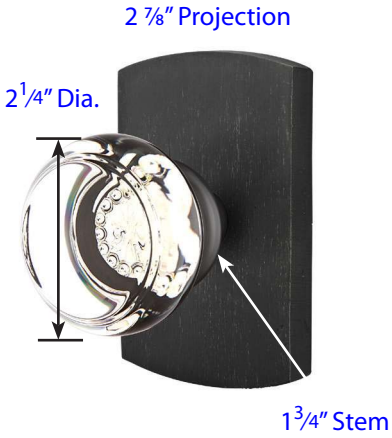

Georgetown (GT)
with #4 Rosette

See page 28 for rosette specification.

Door Thickness Specifications

- Standard Door Thickness: 1¼"- 2"
  Standard Components:
- Privacy Pin (for privacy sets)
- Inside Passage Half Spindle
- 1½" Rosette Screws
- Full-Lip Strike Plate

- Extended Door Thickness: 2"- 2½"
  Extended Components:
- Privacy Pin w/ Extension (for privacy sets)
- Long Inside Passage Half Spindle
- 2" Rosette Screws
- Extended Full-Lip Strike Plate

- Extended Door Thickness: 2½"- 3"
  Extended Components:
- Privacy Pin w/ Extension (for privacy sets)
- Extra Long Inside Passage Half Spindle
- 2½" Rosette Screws
- Extended Full-Lip Strike Plate

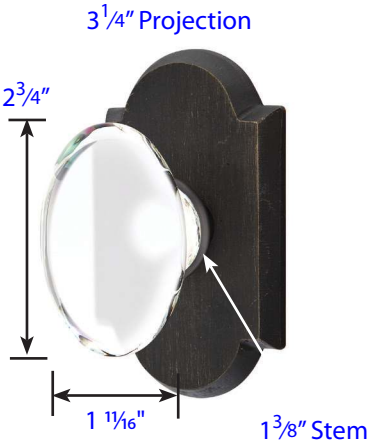

Hampton (HT)
with #1 Rosette

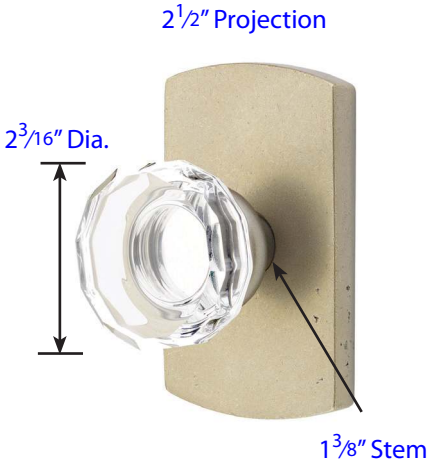

Lowell (LW)
with #4 Rosette

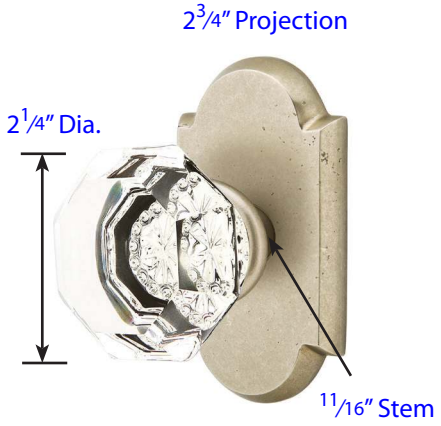

Old Town - Clear (OT)
with #1 Rosette

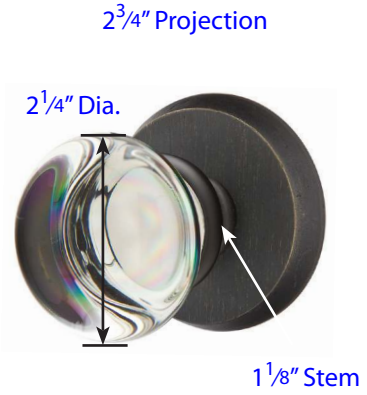

Providence (PC)
with #2 Rosette

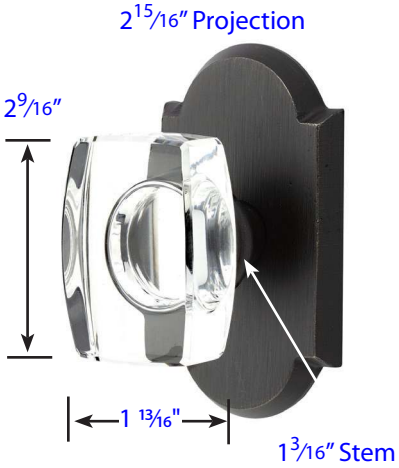

Windsor (WS)
with #1 Rosette

See page 28 for rosette specification.

Door Thickness Specifications

- Standard Door Thickness: 1¼"- 2"
  Standard Components:
- Privacy Pin (for privacy sets)
- Inside Passage Half Spindle
- 1½" Rosette Screws
- Full-Lip Strike Plate

- Extended Door Thickness: 2"- 2½"
  Extended Components:
- Privacy Pin w/ Extension (for privacy sets)
- Long Inside Passage Half Spindle
- 2" Rosette Screws
- Extended Full-Lip Strike Plate

- Extended Door Thickness: 2½"- 3"
  Extended Components:
- Privacy Pin w/ Extension (for privacy sets)
- Extra Long Inside Passage Half Spindle
- 2½" Rosette Screws
- Extended Full-Lip Strike Plate

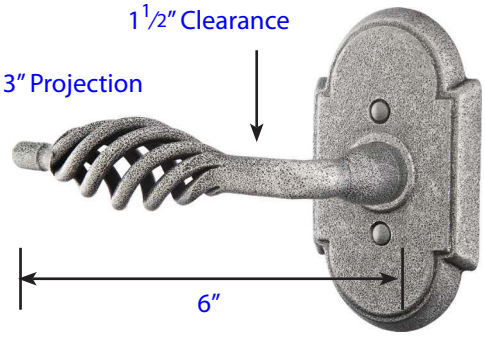

Lafayette (L)
with #1 Rosette
DISCONTINUED

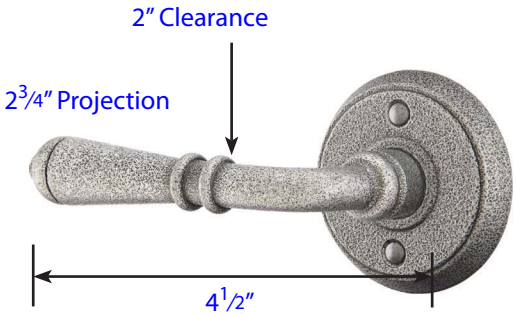

Normandy (N)
with #2 Rosette

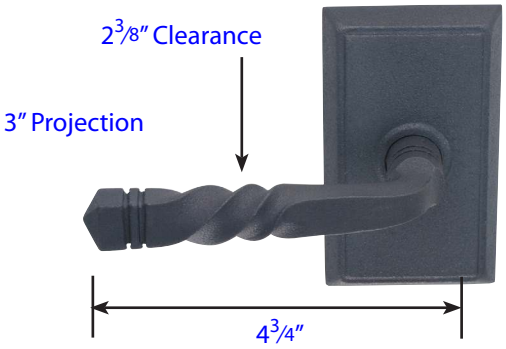

San Carlos (SC)
with #3 Rosette

Rosettes

⅜" Thick

#1

4⅜" x 2⁹⁄₁₆"

#2

2⅝" Dia.

#3

4⅜" x 2⁹⁄₁₆"

Door Thickness Specifications

- Standard Door Thickness: 1⅜"- 2"
  Standard Components:
- Privacy Pin (for privacy sets)
- Inside Passage Half Spindle
- 1½" Rosette Screws
- Full-Lip Strike Plate

- Extended Door Thickness: 2"- 2½"
  Extended Components:
- Privacy Pin w/ Extension (for privacy sets)
- Long Inside Passage Half Spindle
- 2" Rosette Screws
- Extended Full-Lip Strike Plate

- Extended Door Thickness: 2½"- 3"
  Extended Components:
- Privacy Pin w/ Extension (for privacy sets)
- Extra Long Inside Passage Half Spindle
- 2½" Rosette Screws
- Extended Full-Lip Strike Plate

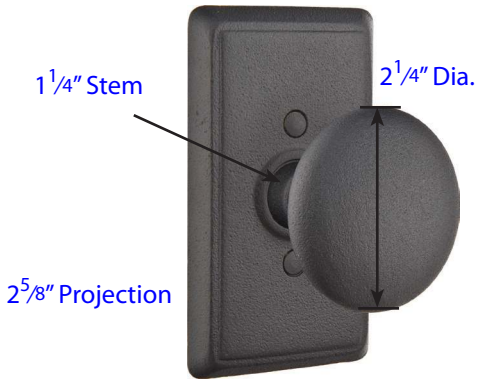

Jamestown (J)
with #3 Rosette

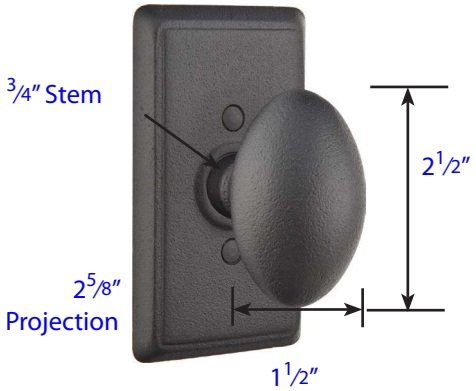

Savannah (SV)
with #3 Rosette

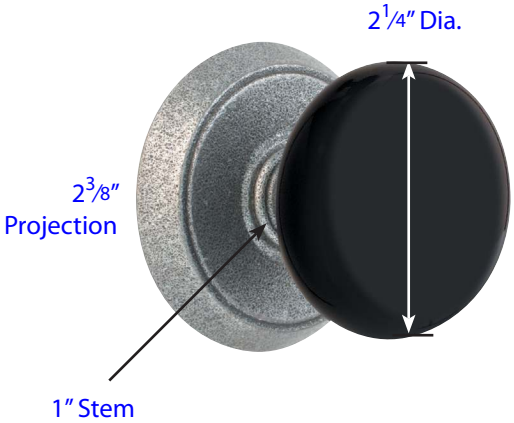

Madison Black (MB)
with #2 Rosette

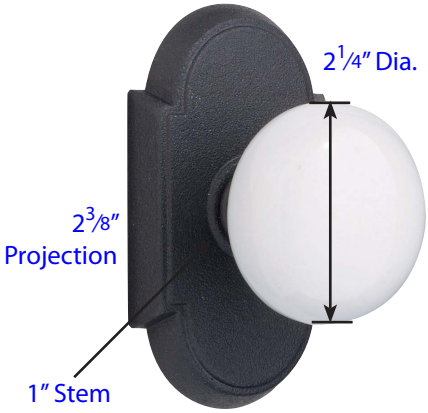

Madison Ivory (MI)
with #1 Rosette

See page 31 for rosette specification.

Door Thickness Specifications

- Standard Door Thickness: 1⅜"- 2"
  Standard Components:
- Privacy Pin (for privacy sets)
- Inside Passage Half Spindle
- 1½" Rosette Screws
- Full-Lip Strike Plate

- Extended Door Thickness: 2"- 2½"
  Extended Components:
- Privacy Pin w/ Extension (for privacy sets)
- Long Inside Passage Half Spindle
- 2" Rosette Screws
- Extended Full-Lip Strike Plate

- Extended Door Thickness: 2½"- 3"
  Extended Components:
- Privacy Pin w/ Extension (for privacy sets)
- Extra Long Inside Passage Half Spindle
- 2½" Rosette Screws
- Extended Full-Lip Strike Plate

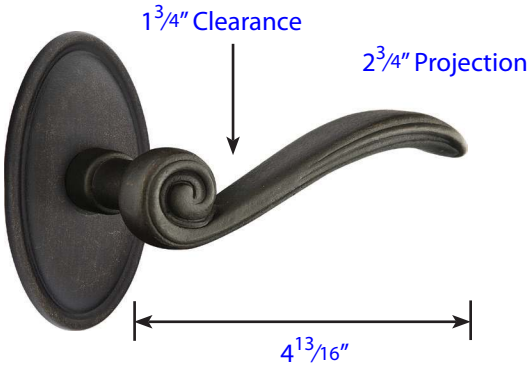

Medici (MDI)
with #14 Rosette

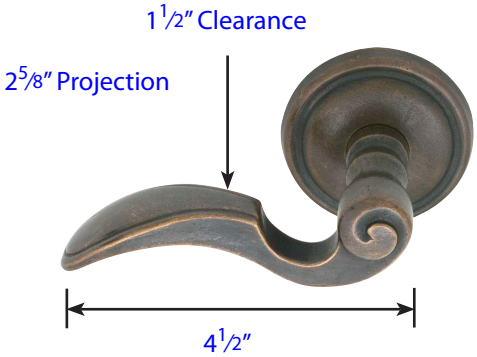

Napoli (NA)
with #12 Rosette

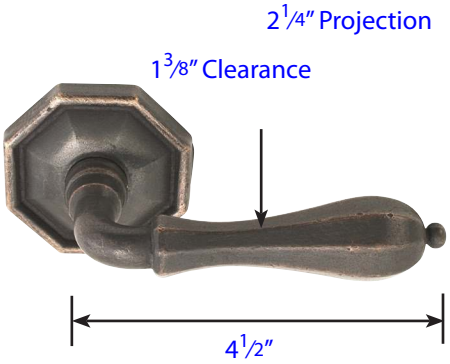

Octagon (OCL)
with #15 Rosette

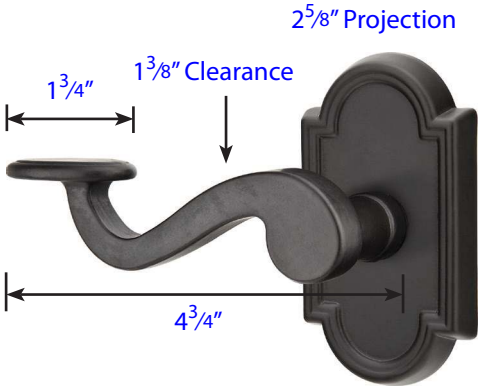

Padua (PD)
with #11 Rosette

See page 34 for rosette specification.

Door Thickness Specifications

- Standard Door Thickness: 1⅜"- 2"
  Standard Components:
- Privacy Pin (for privacy sets)
- Inside Passage Half Spindle
- 1½" Rosette Screws
- Full-Lip Strike Plate

- Extended Door Thickness: 2"- 2½"
  Extended Components:
- Privacy Pin w/ Extension (for privacy sets)
- Long Inside Passage Half Spindle
- 2" Rosette Screws
- Extended Full-Lip Strike Plate

- Extended Door Thickness: 2½"- 3"
  Extended Components:
- Privacy Pin w/ Extension (for privacy sets)
- Extra Long Inside Passage Half Spindle
- 2½" Rosette Screws
- Extended Full-Lip Strike Plate

2 7/8" Projection

Octagon (OCK)
with #15 Rosette

2 3/8" Projection

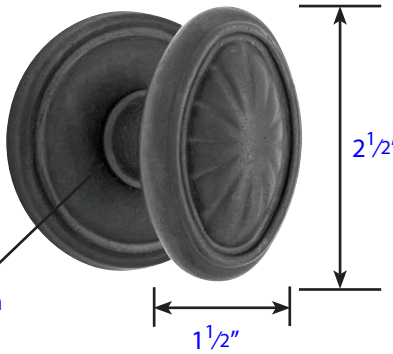

Parma (PA)
with #12 Rosette

2 5/8" Projection

Petal (PT)
with #12 Rosette

Rosettes

7/16" Thick

#11

4½" x 2½"

#12

2⅝" Dia.

#14

4½" x 2⅜"

#15

2½" x 2½"

Door Thickness Specifications

- Standard Door Thickness: 1⅜"- 2"
  Standard Components:
- Privacy Pin (for privacy sets)
- Inside Passage Half Spindle
- 1½" Rosette Screws
- Full-Lip Strike Plate

- Extended Door Thickness: 2"- 2½"
  Extended Components:
- Privacy Pin w/ Extension (for privacy sets)
- Long Inside Passage Half Spindle
- 2" Rosette Screws
- Extended Full-Lip Strike Plate

- Extended Door Thickness: 2½"- 3"
  Extended Components:
- Privacy Pin w/ Extension (for privacy sets)
- Extra Long Inside Passage Half Spindle
- 2½" Rosette Screws
- Extended Full-Lip Strike Plate