DURASTAR®
SIRIUS HEAT™

48,000 BTU/H SIRIUS HEAT MULTI-ZONE HEAT PUMP

SUBMITTAL COVER SHEET

PROJECT NAME _____

LOCATION _____

ARCHITECT _____

ENGINEER _____

CONTRACTOR _____

REFERENCE _____

SUBMITTED BY _____ **DATE** _____

Multi-Zone Outdoor Unit (ODU):
DRA6H48M2A

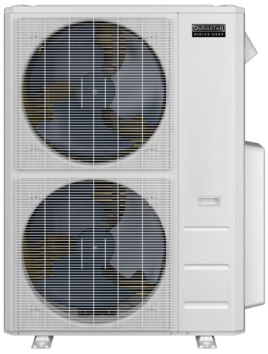

PRODUCT FEATURES

- High heating capacity at 0°F
- Variable speed inverter compressor
- Low ambient heating and cooling down to -22°F
- Quiet operation
- Included base pan heater
- Auto restart
- Anti-corrosive coil coating
- A2L refrigerant detection system
- Electronic refrigerant shut-off valve
- Port adaptors included

EFFICIENCY DATA	DUCTLESS	MIXED	DUCTED
SEER2	21.20	20.80	20.40
EER2	12.00	11.85	11.70
HSPF2	10.20	10.60	11.00
COP at 47°F (8°C)[2]	3.60	3.56	3.52
COP at 17°F (-8°C)[3]	2.40	2.50	2.60
COP at 5°F (-15°C)[4]	2.00	2.00	2.00

SYSTEM DATA	
Refrigerant Type	R-454B
Refrigerant Charge (oz. (kg))	151.7 (4.3)
Design Pressure (PSIG)	550/340
Indoor/ Outdoor Coil Coating	Golden Fin Coating

CAPACITIES		DUCTLESS	MIXED	DUCTED
Cooling (BTU/hr)	Rated at 95°F (35°C)[1]	45000	46000	47000
	at 109°F (43°C)	42000	43500	45000
	at 5°F (-15°C)	57500	59250	61000
	Minimum	12000	12000	12000
	Maximum	55000	56000	57000
Heating (BTU/hr)	Rated at 47°F (8°C)[2]	49000	48500	48000
	Rated at 17°F (-8°C)[3]	40500	42500	44500
	Rated at 5°F (-15°C)[4]	48000	48000	48000
	at -13°F (-25°C)	29000	29500	30000
	at -22°F (-30°C)	22600	23800	25000
	Minimum	13000	13000	13000
	Maximum	55000	57500	60000
Nominal ODU Capacity[5]		48000		

LOW GWP R-454B REFRIGERANT

ENERGY STAR

AHRI CERTIFIED® www.ahridirectory.org Unitary Small HP AHRI Standard 210/240 Certification applies only when the complete system is listed with AHRI.

c ETL US Intertek

Specifications are subject to change without notice.
© 2024 Ferguson Enterprises LLC
www.durastar.com

DURASTAR®
SIRIUS HEAT™

48,000 BTU/H SIRIUS HEAT MULTI-ZONE HEAT PUMP

SPECIFICATIONS-DRA6H48M2A

LINE SET REQUIREMENTS	
Connection Type	Flare
Liquid (in. (mm))	6 x Ø1/4 (Ø6.35)
Gas (in. (mm))	4 x Ø3/8 (Ø9.52) 2 x Ø1/2 (Ø12.70)
Refrigeration Adaptors Included (in)	2 x 1/4 ->3/8 1 x 3/8 ->1/2 2 x 1/2 ->3/8 2 x 1/2 ->5/8
Minimum Indoor Units Connected	2
Pre-Charge Length/ Zone (ft. (m))	25 (7.5)
Maximum Length (combined IDUs) (ft. (m))	262 (80)
Maximum Length (per IDU) (ft. (m))	115 (35)
Minimum Length (per IDU) (ft. (m))	10 (3)
Max. Height Differential between IDU and ODU (ft. (m))	49 (15)
Max. Height Differential between IDUs (ft. (m))	33 (10)
Additional Refrigerant for Ø1/4" Liquid Pipe (oz./ft (g/m))	.16 (15)
Additional Refrigerant for Ø3/8" Liquid Pipe (oz./ft (g/m))	.32 (30)

ELECTRICAL DATA	DUCTLESS	DUCTED
Voltage/Phase/Frequency	208-230V, 1 Phase, 60 Hz	
Voltage Range	187-253V	
Recommended Breaker (Amps)	45	
Minimum Circuit Ampacity (Amps)	43.0	
Communication Wire Size	14*4 AWG Stranded	
Rated Current - Cooling (Amps)[1]	16.8	17.9
Rated Current - Heating (Amps)[2]	18.0	17.5

[1] Value at AHR1 Rated Capacity at 95°F (35°C) (AFull)
[2] Value at AHR1 Rated Capacity at 47°F (8°C) (H1Full)
[3] Value at AHR1 Rated Capacity at 17°F (-8°C) (H32)
[4] Value at AHR1 Rated Capacity at 5°F (-15°C) (H42)
[5] If the total indoor unit load exceeds the nominal capacity of the outdoor unit, the practical output capacity of each indoor unit will be correspondingly reduced. This situation is very evident during heating mode.

OUTDOOR UNIT DATA		
Unit Dimensions (in. (mm))	Width	37-1/2 (952)
	Depth	16-5/16 (415)
	Height	52-1/2 (1333)
Carton Dimensions (in. (mm))	Width	43-1/8 (1095)
	Depth	19-1/2 (495)
	Height	58-1/4 (1480)
Net Weight (lbs. (kg))	246.5 (111.8)	
Gross Weight (lbs. (kg))	276.7 (125.5)	
Cooling Operating Temp. (°F (°C))	-22 - 122 (-30 - 50)	
Heating Operating Temp. (°F (°C))	-22 - 75 (-30 - 24)	
Airflow (CFM)	4503	
Sound Pressure (dB(A))	65	
Fan Speed (r/min)	Low	650
	Med	700
	High	800
Fan Motor Current Type	DC	

COMPRESSOR	
Type	DC Inverter Twin Cylinder Rotary
Oil Type	VG75
Oil Charge (oz.(ml))	44 (1300)

Specifications are subject to change without notice.
© 2024 Ferguson Enterprises LLC

48,000 BTU/H SIRIUS HEAT MULTI-ZONE HEAT PUMP

ODU DIMENSIONS - DRA6H48M2A

Clearances

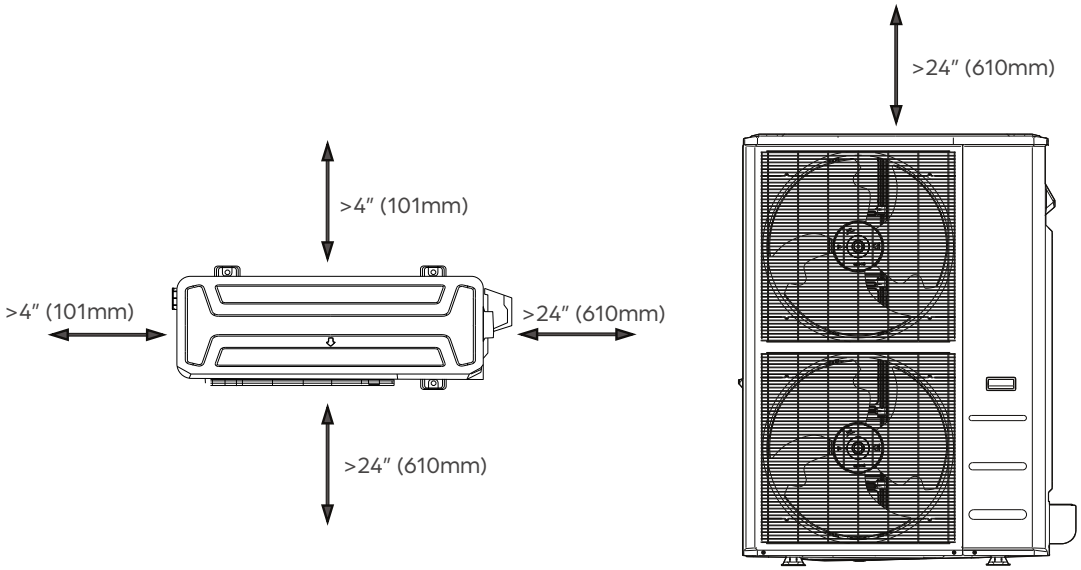

Dimensions

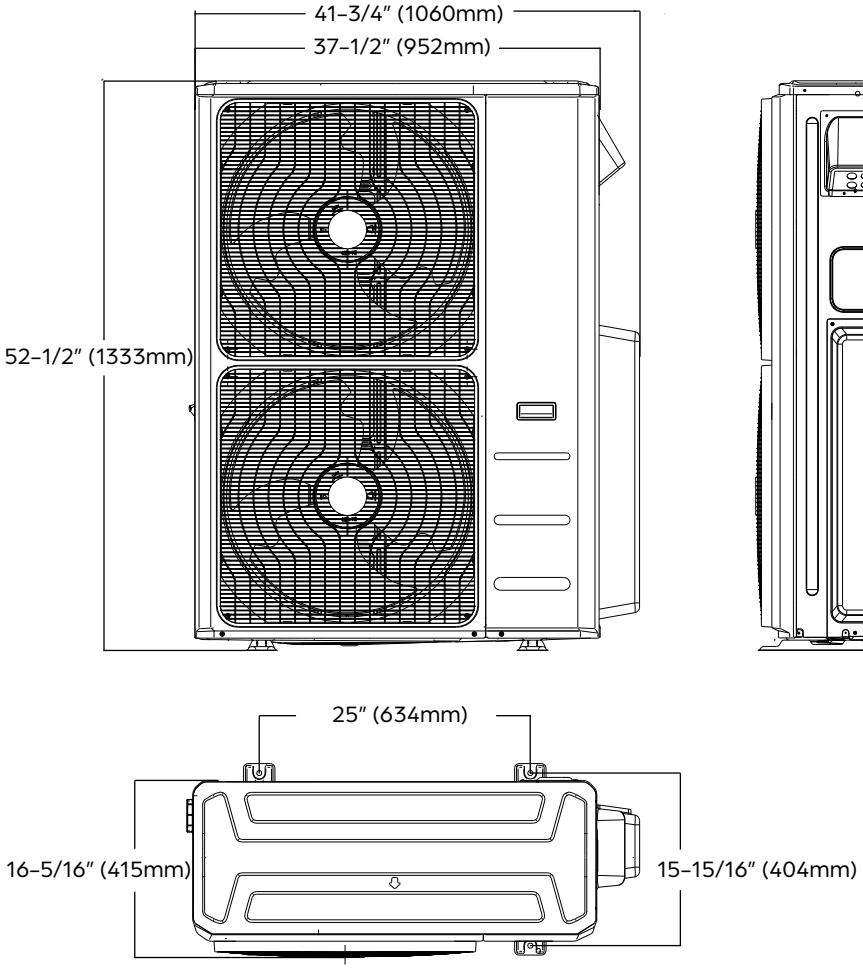

Specifications are subject to change without notice.
© 2024 Ferguson Enterprises LLC