CONEALED WALL BOX
MODEL: ATW-CWB

FOR USE WITH ATW-TDHC and ATW-TDHCR
SIRIO | QUADRO | MODELLO i | VEGA | ANTUS

TECHNICAL DRAWING

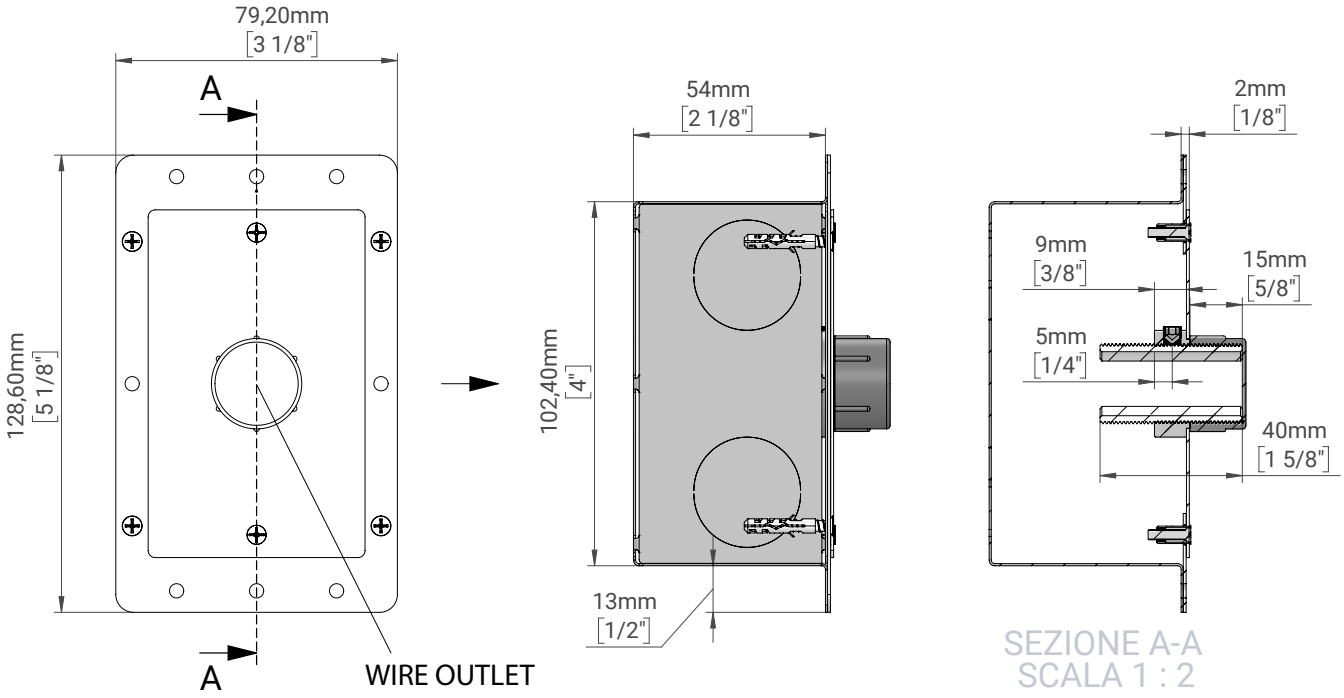

SEZIONE A-A
SCALA 1 : 2

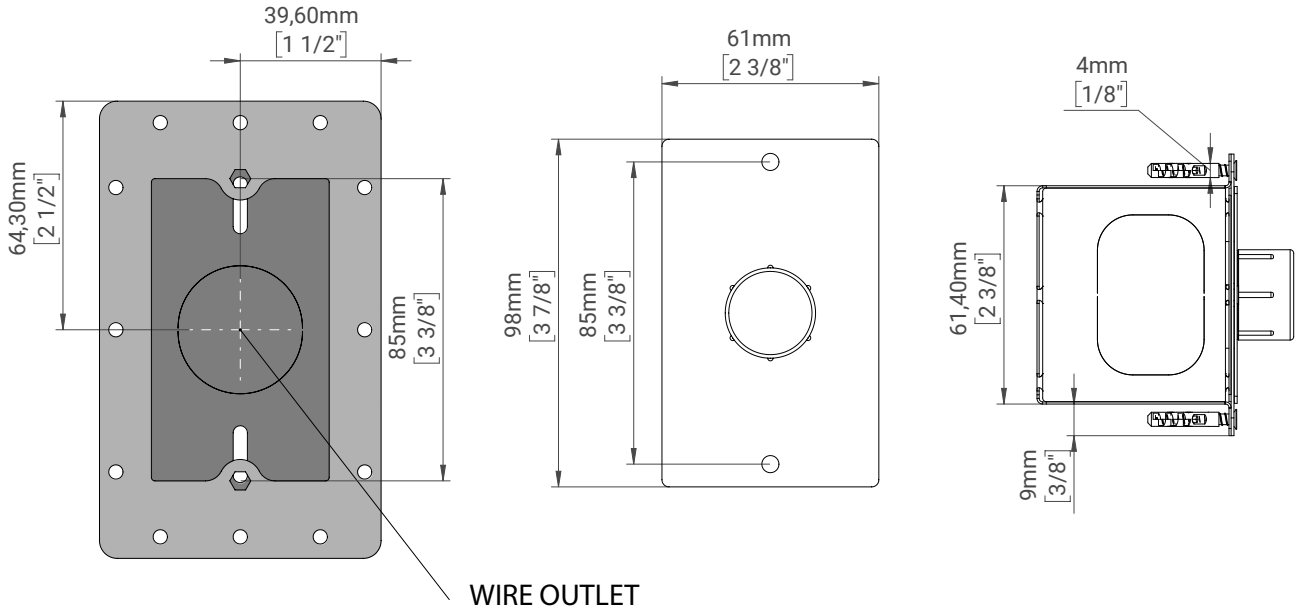

Amba
HEATED TOWEL RACKS
www.ambaproducts.com