Installation, Operation, and Maintenance

Packaged Rooftop Air Conditioners Precedent™ — Heat Pump

3 to 10 Tons — 60 Hz

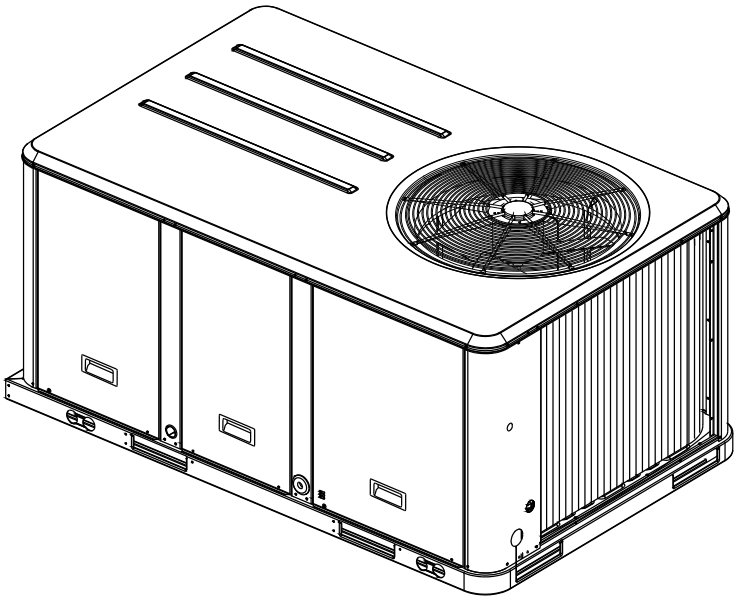

Model Numbers: WSC036H-WSC060H
Model Numbers: WSC092H, WSC102H, WSC120H
Model Numbers: W/DHC036H-W/DHC120H

⚠ SAFETY WARNING

Only qualified personnel should install and service the equipment. The installation, starting up, and servicing of heating, ventilating, and air-conditioning equipment can be hazardous and requires specific knowledge and training. Improperly installed, adjusted or altered equipment by an unqualified person could result in death or serious injury. When working on the equipment, observe all precautions in the literature and on the tags, stickers, and labels that are attached to the equipment.

September 2022 **RT-SVX23R-EN**

Introduction

Read this manual thoroughly before operating or servicing this unit.

Warnings, Cautions, and Notices

Safety advisories appear throughout this manual as required. Your personal safety and the proper operation of this machine depend upon the strict observance of these precautions.

The three types of advisories are defined as follows:

⚠WARNING Indicates a potentially hazardous situation which, if not avoided, could result in death or serious injury.

⚠CAUTION Indicates a potentially hazardous situation which, if not avoided, could result in minor or moderate injury. It could also be used to alert against unsafe practices.

NOTICE Indicates a situation that could result in equipment or property-damage only accidents.

Important Environmental Concerns

Scientific research has shown that certain man-made chemicals can affect the earth's naturally occurring stratospheric ozone layer when released to the atmosphere. In particular, several of the identified chemicals that may affect the ozone layer are refrigerants that contain Chlorine, Fluorine and Carbon (CFCs) and those containing Hydrogen, Chlorine, Fluorine and Carbon (HCFCs). Not all refrigerants containing these compounds have the same potential impact to the environment. Trane advocates the responsible handling of all refrigerants-including industry replacements for CFCs and HCFCs such as saturated or unsaturated HFCs and HCFCs.

Important Responsible Refrigerant Practices

Trane believes that responsible refrigerant practices are important to the environment, our customers, and the air conditioning industry. All technicians who handle refrigerants must be certified according to local rules. For the USA, the Federal Clean Air Act (Section 608) sets forth the requirements for handling, reclaiming, recovering and recycling of certain refrigerants and the equipment that is used in these service procedures. In addition, some states or municipalities may have additional requirements that must also be adhered to for responsible management of refrigerants. Know the applicable laws and follow them.

⚠WARNING

Proper Field Wiring and Grounding Required!

Failure to follow code could result in death or serious injury. All field wiring MUST be performed by qualified personnel. Improperly installed and grounded field wiring poses FIRE and ELECTROCUTION hazards. To avoid these hazards, you MUST follow requirements for field wiring installation and grounding as described in NEC and your local/state/national electrical codes.

⚠WARNING

Personal Protective Equipment (PPE) Required!

Failure to wear proper PPE for the job being undertaken could result in death or serious injury. Technicians, in order to protect themselves from potential electrical, mechanical, and chemical hazards, MUST follow precautions in this manual and on the tags, stickers, and labels, as well as the instructions below:

- **Before installing/servicing this unit, technicians MUST put on all PPE required for the work being undertaken (Examples; cut resistant gloves/sleeves, butyl gloves, safety glasses, hard hat/bump cap, fall protection, electrical PPE and arc flash clothing). ALWAYS refer to appropriate Safety Data Sheets (SDS) and OSHA guidelines for proper PPE.**
- **When working with or around hazardous chemicals, ALWAYS refer to the appropriate SDS and OSHA/GHS (Global Harmonized System of Classification and Labeling of Chemicals) guidelines for information on allowable personal exposure levels, proper respiratory protection and handling instructions.**
- **If there is a risk of energized electrical contact, arc, or flash, technicians MUST put on all PPE in accordance with OSHA, NFPA 70E, or other country-specific requirements for arc flash protection, PRIOR to servicing the unit. NEVER PERFORM ANY SWITCHING, DISCONNECTING, OR VOLTAGE TESTING WITHOUT PROPER ELECTRICAL PPE AND ARC FLASH CLOTHING. ENSURE ELECTRICAL METERS AND EQUIPMENT ARE PROPERLY RATED FOR INTENDED VOLTAGE.**

⚠WARNING

Follow EHS Policies!

Failure to follow instructions below could result in death or serious injury.

- **All Trane personnel must follow the company's Environmental, Health and Safety (EHS) policies when performing work such as hot work, electrical, fall protection, lockout/tagout, refrigerant handling, etc. Where local regulations are more stringent than these policies, those regulations supersede these policies.**
- **Non-Trane personnel should always follow local regulations.**

Copyright

This document and the information in it are the property of Trane, and may not be used or reproduced in whole or in part without written permission. Trane reserves the right to revise this publication at any time, and to make changes to its content without obligation to notify any person of such revision or change.

Trademarks

All trademarks referenced in this document are the trademarks of their respective owners.

Revision History

- Updated Model Number Description chapter.
- Updated Dimensions and Weights chapter.
- Updated Installation chapter.
- Updated Wiring Diagrams chapter.

Table of Contents

Model Number Descriptions 6
Model Number Notes 7
General Information 8
Unit Inspection 8
Storage 8
Unit Nameplate 8
Compressor Nameplate 8
Unit Description 8
Economizer Control Actuator (Optional) . . . 8
System Input Devices and Functions 9
Low Pressure Control 9
High Pressure Control 9
Power Exhaust Control (Optional) 10
Lead/Lag Control (Dual Circuit Only) 10
Pre-Installation 12
Dimensions and Weights 13
Installation 21
Foundation 21
Horizontal Units 21
Ductwork 21
Roof Curb 22
Rigging 23
General Unit Requirements 24
Factory Installed Economizer 24
Temperature Limit Switch Usage for Electric Heat Units 24
Horizontal Discharge Conversion WSC036H, WSC048H, W/DHC036H 24
Horizontal Discharge Conversion WSC060H, WSC092-120H, W/DHC048-120H 25
TCO-A Instructions 26
Return Air Smoke Detector 26
Air-Fi® Wireless Communication Interface . . 27
Main Electrical Power Requirements 28
Through-the-Base Gas Installation 28
Requirements for Gas Heat 28
Electric Heat Requirements 29
Low Voltage Wiring (AC and DC) Requirements 29
Condensate Drain Configuration 29
Filter Installation 30
Field Installed Power Wiring 30
Standard Wiring 30
Optional TBUE Wiring (Through-the-Base Electrical Option) 30
Field Installed Control Wiring 31
Controls Using 24 Vac 31
Controls Using DC Analog Input/Outputs (Standard Low Voltage Multiconductor Wire) 32
Space Temperature Averaging (ReliaTel™ only) 34
Pre-Start 38
Voltage Imbalance 38
Electrical Phasing (Three Phase Motors) . . .38
Compressor Crankcase Heaters 39
ReliaTel™ Controls 39
Test Modes 40
Unit Start-Up 42
Sequence of Operation 42
ReliaTel™ Controls 42
ReliaTel™ Controls - Constant Volume (CV) 42
ReliaTel™ Control Cooling without an Economizer 42
Three-Stages of Cooling 42
ReliaTel™ Control Evaporator Fan Operation (for Gas Units) 42
ReliaTel™ Control Evaporator Fan Operation (for Cooling Only Units) 43
Low Ambient Operation 43
Multi-Speed Indoor Motor 43
Fan Output% 43
Multi-Zone VAV Sequence of Operation 43
Supply Air Pressure Control 43
Supply Air Static Pressure Limit 44
Supply Air Temperature Controls 44
Supply Air Setpoint Reset 44

Zone Temperature Control 44
Variable Air Volume Applications (Single Zone VAV) 45
Discharge Air Cool Setpoint Adjustment . . 45
ReliaTel™ Control Cooling with an Economizer 45
ReliaTel™ Control Dehumidification 46
Dehumidification Coil Purge Cycle 46
ReliaTel™ Control Cooling with an Economizer 46
Economizer Set-Up 46
ReliaTel™ Control Heating Operation (for Cooling Only Units) 47
ReliaTel™ Control Heating Operation (for Gas Units) 47
Ignition Module 47
Drain Pan Condensate Overflow Switch (Optional) 48
Sequence of Operation - Heat Pumps 49
Heating Operation 49
Demand Defrost 49
Emergency Heat Operation 49
Verifying Proper Air Flow 49
Units with 5-Tap Direct Drive Indoor Fan . . 49
Units with Belt Drive Indoor Fan 50
Units with Constant CFM Direct Drive Indoor Fan 50
3 to 5 Ton 17 Plus/WHC/DHC units with the constant CFM direct drive indoor fan . . 50
ReliaTel™ Units Equipped with Direct Drive Indoor Plenum Fan (optional except for 10 Ton Units) 51
Return Air Smoke Detector 52
Economizer Start-Up 52
Compressor Start-Up 53
Heating Start-Up 54
Final System Setup 54
Maintenance 55
Fan Belt Adjustment - Belt Drive Units 55
Monthly Maintenance 56
Filters 56
Return Air Smoke Detector Maintenance . . 56
Condensate Overflow Switch 56
Cooling Season 56
Heating Season 56
Coil Cleaning 57
Troubleshooting 59
ReliaTel™ Control 59
System Status Checkout Procedure 59
Method 1 59
Resetting Cooling and Heating Lockouts . . .60
Zone Temperature Sensor (ZTS) Service Indicator 61
Clogged Filter Switch 61
Fan Failure Switch 61
Condensate Overflow Switch 61
Zone Temperature Sensor (ZTS) Test 61
Test 1 Zone Temperature Thermistor (ZTEMP) 61
Test 2 Cooling Set Point (CSP) and Heating Set Point (HSP) 61
Test 3 System Mode and Fan Selection . . .61
Test 4 LED Indicator Test, (SYS ON, HEAT, COOL and SERVICE) 61
Programmable and Digital Zone Sensor Test 62
Mixed Air Temperature Low Limit Diagnostic 64
Troubleshooting Procedures for Direct Drive Plenum Fan 64
Wiring Diagrams 65
Limited Warranty 67
Heat Pump WCD, WCH, WSC, WHC and DHC (Parts Only) 67
Models Less Than 20 Tons for Commercial Use* 67

Model Number Descriptions

Digit 1 - Unit Type

W Packaged Heat Pump[2]
D Dual Fuel Heat Pump

Digit 2 - Efficiency

S Standard Efficiency
H High Efficiency

Digit 3 - Airflow

C Convertible

Digit 4,5,6 - Nominal Gross Cooling Capacity (MBh)

036 3 Ton
048 4 Ton
060 5 Ton
074 6 Ton
092 7.5 Ton
102 8.5 Ton
120 10 Ton

Digit 7 - Major Design Sequence

Digit 8 - Voltage Selection

3 208-230/60/3
4 460/60/3
W 575/60/3

Digit 9 - Unit Controls

R ReliaTel™ Microprocessor

Digit 10 - Heating Capacity

Note: *Applicable to Digit 1,W models only.*

0 No Electric Heat
B 6 kW
C 9 kW
E 12 kW
G 18 kW
J 23 kW
K 27 kW
N 36 kW
P 54 kW

Note: *Applicable to Digit 1,D models only.*

L Low Heat
M Medium Heat
H High Heat
X Low Heat, Stainless Steel Heat Exchanger
Y Medium Heat, Stainless Steel Heat Exchanger
Z High Heat, Stainless Steel Heat Exchanger

Digit 11 - Minor Design Sequence

Digit 12,13 - Service Sequence

** Factory Assigned

Digit 14 - Fresh Air Selection

0 No Fresh Air
A Manual Outside Air Damper 0-50%[1]
B Motorized Outside Air Damper 0-50%[10]
C Economizer, Dry Bulb 0-100% without Barometric Relief[4]
D Economizer, Dry Bulb 0-100% with Barometric Relief[4]
E Economizer, Reference Enthalpy 0-100% without Barometric Relief[4]
F Economizer, Reference Enthalpy 0-100% with Barometric Relief[4]
G Economizer, Comparative Enthalpy 0-100% without Barometric Relief[4]
H Economizer, Comparative Enthalpy 0-100% with Barometric Relief[4]
K Low Leak Economizer with Barometric Relief
M Low Leak Economizer with Reference Enthalpy with Barometric Relief
P Low Leak Economizer with Comparative Enthalpy with Barometric Relief

Digit 15 - Supply Fan/Drive Type/ Motor

0 Standard Drive[3]
1 Oversized Motor[3]
2 Optional Belt Drive Motor
6 Single Zone Variable Air Volume (SZVAV)[14]
7 Multi-Speed Indoor Fan[12]
8 Single Zone Variable Air Volume (SZVAV) w/Oversized Motor[14]
E Multi-Zone Variable Air Volume (MZVAV)[14]
F Multi-Zone Variable Air Volume (MZVAV) w/Oversized Motor[14]

Digit 16 - Hinged Service Access/ Filters

0 Standard Panels/Standard Filters
A Hinged Access Panels/Standard Filters
B Standard Panels/2-in. MERV 8 Filters
C Hinged Access Panels/2-in. MERV 8 Filters
D Standard Panels/2-in. MERV 13 Filters
E Hinged Access Panels/2-in. MERV 13 Filters

Digit 17 - Condenser Coil Protection

0 Standard Coil
1 Standard Coil with Hail Guard
2 Black Epoxy Pre-Coated Condenser Coil
3 Black Epoxy Pre-Coated Condenser Coil with Hail Guard

Digit 18 - Through-the-Base Provisions

0 No Through-the-Base Provisions
A Through-the-Base Electric[5]
B Through-the-Base Gas Piping[17]
C Through-the-Base Electric and Gas Piping[17]

Digit 19 - Disconnect/Circuit Breaker (three-phase only)

0 No Disconnect/No Circuit Breaker
1 Unit Mounted Non-Fused Disconnect[5]
2 Unit Mounted Circuit Breaker[5]

Digit 20 - Convenience Outlet

0 No Convenience Outlet
A Unpowered Convenience Outlet
B Powered Convenience Outlet (three-phase only)[6]

Digit 21 - Communications Options

0 No Communications Interface
1 Trane® Communications Interface
2 LonTalk® Communications Interface
6 BACnet® Communications Interface
7 Air-Fi® Wireless Communications[15]

Digit 22 - Refrigeration System Option

0 Standard Refrigeration System[7]

Digit 23 - Refrigeration Controls

0 No Refrigeration Control[2]
1 Frostat™[11]
2 Crankcase Heater[16]
3 Frostat™ and Crankcase Heater[11,16]

Digit 24 - Smoke Detector

0 No Smoke Detector
A Return Air Smoke Detector[8]
B Supply Air Smoke Detector
C Supply and Return Air Smoke Detectors[8]
D Plenum Smoke Detector

Digit 25 - System Monitoring Controls

0 No Monitoring Control
1 Clogged Filter Switch
2 Fan Failure Switch
3 Discharge Air Sensing Tube
4 Clogged Filter Switch and Fan Fail Switch
5 Clogged Filter Switch and Discharge Air Sensing Tube
6 Fan Fail Switch and Discharge Air Sensing Tube
7 Clogged Filter and Fan Fail Switches and Discharge Air Sensing Tube
A Condensate Drain Pan Overflow Switch
B Clogged Filter Switch and Condensate Drain Pan Overflow Switch
C Fan Failure Switch and Condensate Drain Pan Overflow Switch
D Discharge Air Sensing and Condensate Drain Pan Overflow Switch
E Clogged Filter Switch, Fan Failure Switch and Condensate Drain Pan Overflow Switch
F Clogged Filter Switch, Discharge Air Sensing Tube and Condensate Drain Pan Overflow Switch
G Fan Failure Switch, Discharge Air Sensing Tube and Condensate Drain Pan Overflow Switch

H Clogged Filter Switch, Fan Failure Switch, Discharge Air Sensing and Condensate Drain Pan Overflow Switch

Digit 26 - System Monitoring Controls

0 No Monitoring Controls
A Demand Control Ventilation (CO_2)[13]
B Low Leak Economizer with FDD (Fault Detection and Diagnostics)
C FDD (Fault Detection and Diagnostics) with DCV (Demand Control Ventilation)

Digit 27 - Unit Hardware Enhancements

0 No Enhancements
1 Stainless Steel Drain Pan

Digit 31 - Advanced Unit Controls

0 Standard Unit Controls
1 Human Interface

Model Number Notes

1. Manual outside air damper will ship factory supplied within the unit, but must be field installed.
2. High pressure control is standard on all units.
3. Multi-stage, direct drive standard on 3 to 5 tons models. Belt drive standard on 7.5 to 8.5 tons standard efficiency models. Variable speed direct drive standard on 10 tons model and 6 to 8.5 tons high efficiency models.
4. Economizer with barometric relief is for downflow configured units only. Order economizer without barometric relief for horizontal configuration. Barometric relief for horizontal configured units must be ordered as field installed accessory.
5. Through-the-base electric required when ordering disconnect/circuit breaker options.
6. Requires use of disconnect or circuit breaker.
7. Standard metering devices are TXVs.
8. The return air smoke detector may not fit up or work properly on the Precedent™ units when used in conjunction with 3rd party accessories such as bolt on heat wheels, economizers and power exhaust. Do not order the return air smoke detectors when using this type of accessory.
9. Requires hinged access panels.
10. Motorized outside air damper is not available on multi-speed or SZVAV (Single Zone Variable Air Volume) or MZVAV (Multi Zone Variable Air Volume) products.
11. Frostat™ standard on 6 to 10 tons High Efficiency, multi-speed and SZVAV (single zone variable air volume) products.
12. Multi-speed indoor fan available on 6, 7.5, 8.5 and 10 tons products.
13. Demand control ventilation option includes wiring only. The CO_2 sensor is a field-installed only option.
14. SZVAV/MZVAV available only on 3 to 10 tons high efficiency and SZVAV available on 7.5 to 10 tons standard efficiency unit.
15. Must be used with BACnet® open protocol.
16. Crankcase heater is standard on all heat pumps.
17. Includes gas piping and shutoff (field assembly required).

General Information

Unit Inspection

As soon as the unit arrives at the job site

- Verify that the nameplate data matches the data on the sales order and bill of lading (including electrical data).
- Verify that the power supply complies with the unit nameplate specifications.
- Visually inspect the exterior of the unit, including the roof, for signs of shipping damage.

If the job site inspection of the unit reveals damage or material shortages, file a claim with the carrier immediately. Specify the type and extent of the damage on the “bill of lading” before signing.

- Visually inspect the internal components for shipping damage as soon as possible after delivery and before it is stored. Do not walk on the sheet metal base pans.
- If concealed damage is discovered, notify the carrier’s terminal of damage immediately by phone and by mail. Concealed damage must be reported within 15 days.
- Request an immediate joint inspection of the damage by the carrier and the consignee. Do not remove damaged material from the receiving location. Take photos of the damage, if possible. The owner must provide reasonable evidence that the damage did not occur after delivery.
- Notify the appropriate sales representative before installing or repairing a damaged unit.

Storage

Take precautions to prevent condensate from forming inside the unit’s electrical compartments and motors if:

1. the unit is stored before it is installed; or,
2. the unit is set on the roof curb, and temporary heat is provided in the building. Isolate all side panel service entrances and base pan openings (e.g., conduit holes, Supply Air and Return Air openings, and flue openings) from the ambient air until the unit is ready for start-up.

Note: *Do not use the unit’s heater for temporary heat without first completing the start-up procedure detailed under the Unit Start-Up chapter.*

The manufacturer will not assume any responsibility for equipment damage resulting from condensate accumulation on the unit’s electrical and/or mechanical components.

Unit Nameplate

A Mylar unit nameplate is located on the unit’s corner support next to the filter access panel. It includes the unit model number, serial number, electrical characteristics, refrigerant charge, as well as other pertinent unit data.

Compressor Nameplate

The nameplate for the compressors are located on the side of the compressor.

Unit Description

Before shipment, each unit is leak tested, dehydrated, charged with refrigerant and compressor oil, and run tested for proper control operation.

The condenser coils are aluminum fin, mechanically bonded to copper tubing.

Direct-drive, vertical discharge condenser fans are provided with built-in thermal overload protection.

The ReliaTel™ Control Module is a microelectronic control system that is referred to as “Refrigeration Module” (RTRM). The acronym RTRM is used extensively throughout this document when referring to the control system network.

These modules through proportional/integral control algorithms perform specific unit functions that governs unit operation in response to; zone temperature, supply air temperature, and/or humidity conditions depending on the application. The stages of capacity control for these units is achieved by starting and stopping the compressors.

The RTRM is mounted in the control panel and is factory wired to the respective internal components. The RTRM receives and interpret information from other unit modules, sensors, remote panels, and customer binary contacts to satisfy the applicable request for cooling.

Economizer Control Actuator (Optional)

The ECA monitors the mixed air temperature, return air temperature, minimum position setpoint (local or remote), power exhaust setpoint, CO_2 setpoint, CO_2, and ambient dry bulb/enthalpy sensor or comparative humidity (return air humidity against ambient humidity) sensors, if selected, to control dampers to an accuracy of +/- 5% of stroke. The actuator is spring returned to the closed position any time that power is lost to the unit. It is capable of delivering up to 25 inch pounds of torque and is powered by 24 Vac.

RTCI - ReliaTel™ Trane® Communication Interface (Optional)

This module is used when the application calls for an ICSTM building management type control system. It allows the control and monitoring of the system through an ICS panel. The module can be ordered from the factory or ordered as a kit to be field installed. Follow the installation instruction that ships with each kit when field installation is necessary.

RLCI - ReliaTel™ LonTalk® Communication Interface (Optional)

This module is used when the application calls for an ICSTM building management type control system that is LonTalk®. It allows the control and monitoring of the system through an ICS panel. The module can be ordered from the factory or ordered as a kit to be field installed. Follow the installation instruction that ships with each kit when field installation is necessary.

RBCI - ReliaTel™ BACnet® Communications Interface (Optional)

This module is used when the application calls for an open BACnet® protocol. It allows the control and monitoring of the system through an ICS panel. The module can be ordered from the factory or as a kit to be field installed. Follow the installation instructions that ships with each kit when field installation is necessary.

RTOM – ReliaTel™ Options Module

The RTOM monitors the supply fan proving, clogged filter, supply air temperature, exhaust fan setpoint, supply air tempering, Frostat™ and smoke detector. Refer to system input devices and functions for operation.

This module is standard on 10 tons products and 6 to 10 tons high efficiency products.

System Input Devices and Functions

The RTRM must have a zone sensor or thermostat input in order to operate the rooftop unit. The flexibility of having several mode capabilities depends upon the type of zone sensor thermostat selected to interface with the RTRM.

The descriptions of the following basic Input Devices used within the RTRM network are to acquaint the operator with their function as they interface with the various modules. Refer to the unit's electrical schematic for the specific module connections.

The following controls are available from the factory for field installation.

Supply Fan Failure Input (Optional)

The Fan Failure Switch can be connected to sense indoor fan operation:

FFS (Fan Failure Switch) If air flow through the unit is not proven by the differential pressure switch connected to the RTRM (factory set point 0.07-in. w.c.) within 40 seconds nominally, the RTRM will shut off all mechanical operations, lock the system out, send a diagnostic to ICS, and the SERVICE output will flash. The system will remain locked out until a reset is initiated either manually or through ICS.

Clogged Filter Switch (Optional)

The unit mounted clogged filter switch monitors the pressure differential across the return air filters. It is mounted in the filter section and is connected to the RTOM. A diagnostic SERVICE signal is sent to the remote panel if the pressure differential across the filters is at least 0.5-in. w.c. The contacts will automatically open when the pressure differential across the filters decreases to approximately 0.4-in. w.c. The clogged filter output is energized when the supply fan is operating and the clogged filter switch has been closed for at least 2 minutes. The system will continue to operate regardless of the status of the filter switch.

Note: *On units equipped with factory installed MERV 13 filters, a clogged filter switch with different pressure settings will be installed. This switch will close when the differential pressure is approximately 0.8′ w.c. and open when the differential falls to 0.7-in. w.c.*

Condensate Drain Pan Overflow Switch (Optional)

ReliaTel™ Option

This input incorporates the Condensate Overflow Switch (COF) mounted on the drain pan and the ReliaTel™ Options Module (RTOM). When the condensate level reaches the trip point for 6 continuous seconds, the RTOM will shut down all unit functions until the overflow condition has cleared. The unit will return to normal operation after 6 continuous seconds with the COF in a non-tripped condition. If the condensate level causes unit shutdown more than 2 times in a 3 days period, the unit will be locked-out of operation requiring manual reset of diagnostic system through Zone Sensor or Building Automation System (BAS). Cycling unit power will also clear the fault.

Compressor Disable (CPR1/2)

This input incorporates the low pressure control (LPC) of each refrigeration circuit and can be activated by opening a field supplied contact installed on the LTB.

If this circuit is open before the compressor is started, the compressor will not be allowed to operate. Anytime this circuit is opened for 1 continuous second during compressor operation, the compressor for that circuit is immediately turned "Off". The compressor will not be allowed to restart for a minimum of 3 minutes should the contacts close.

If four consecutive open conditions occur during the first three minutes of operation, the compressor for that circuit will be locked out, a diagnostic communicated to the remote panel (if installed), and a manual reset will be required to restart the compressor.

Low Pressure Control

When the LPC is opened for 1 continuous second, the compressor for that circuit is turned off immediately. The compressor will not be allowed to restart for a minimum of 3 minutes.

If four consecutive open conditions occur during an active call for cooling, the compressor will be locked out, a diagnostic communicated to ICS™, if applicable, and a manual reset required to restart the compressor. On dual compressor units only the affected compressor circuit is locked out.

High Pressure Control

The high pressure controls are wired in series between the compressor outputs on the RTRM and the compressor contactor coils. If the high pressure control switch opens, the RTRM senses a lack of current while calling for cooling and locks the compressor out.

If four consecutive open conditions occur during an active call for cooling, the compressor will be locked out, a diagnostic communicated to ICS™, if applicable, and a manual reset required to restart the compressor. On dual compressor units only the affected compressor circuit is locked out.

Power Exhaust Control (Optional)

The power exhaust fan is started whenever the position of the economizer dampers meets or exceed the power exhaust setpoint when the indoor fan is on.

The setpoint panel is located in the return air section and is factory set at 25%. The return airflow must be configured in downflow orientation.

Lead/Lag Control (Dual Circuit Only)

Lead/Lag is a selectable input located on the RTRM. The RTRM is configured from the factory with the Lead/Lag control disabled. To activate the Lead/Lag function, simply cut the wire connected to J3-8 at the RTRM. When it is activated, each time the designated lead compressor is shut off due to the load being satisfied, the lead compressor or refrigeration circuit switches. When the RTRM is powered up, i.e. after a power failure, the control will default to the number one circuit compressor.

Zone Sensor Module (ZSM) (BAYSENS107*)

This electronic sensor features three system switch settings (Heat, Cool, and Off) and two fan settings (On and Auto). It is a manual changeover control with single setpoint. (Cooling Setpoint Only).

Zone Sensor Module (ZSM) (BAYSENS109*)

This electronic sensor features four system switch settings (Heat, Cool, Auto, and Off) and two fan settings (On and Auto). It is a manual or auto changeover control with dual setpoint capability. It can be used with a remote zone temperature sensor BAYSENS077*.

Programmable Zone Sensor - (BAYSENS119*)

This 7 day programmable sensor features 2, 3 or 4 periods for Occupied or Unoccupied programming per day. If the power is interrupted, the program is retained in permanent memory. If power is off for an extended period of time, only the clock and day may have to be reset.

The zone sensor allows selection of 2, 3 or 4 system modes (Heat, Cool, Auto, and Off), two fan modes (On and Auto). It has dual temperature selection with programmable start time capability.

The occupied cooling set point ranges between 45 and 98 degrees Fahrenheit. The heating set point ranges between 43 and 96 degrees Fahrenheit.

A liquid crystal display (LCD) displays zone temperature, temperature set points, day of the week, time, and operational mode symbols.

The Option Menu is used to enable or disable applicable functions, i.e.; Morning Warm-up, Economizer minimum position override during unoccupied status, Fahrenheit or Centigrade, Supply air tempering, Remote zone temperature sensor, 12/24 hour time display, Smart fan, and Computed recovery.

During an occupied period, an auxiliary relay rated for 1.25 amps @ 30 volts AC with one set of single pole double throw contacts is activated.

Status Inputs (4 Wires Optional). The ZSM can be wired to receive four (4) operating status signals from the RTRM (HEAT, COOL, SYSTEM “ON”, SERVICE). Four (4) wires from the RTRM should be connected to the appropriate terminals (7, 8, 9 and 10) on the ZSM.

Remote Zone Sensor (BAYSENS073*)

This electronic sensor features remote zone sensing and timed override with override cancellation. It is used with a Trane® Integrated Comfort™ building management system.

Remote Zone Sensor (BAYSENS074*)

This electronic sensor features single setpoint capability and timed override with override cancellation. It is used with a Trane® Integrated Comfort™ building management system.

Remote Zone Sensor (BAYSENS016*)

This bullet type temperature sensor can be used for; outside air (ambient) sensing, return air temperature sensing, supply air temperature sensing, remote temperature sensing (uncovered). Wiring procedures vary according to the particular application and equipment involved. Refer to the unit’s wiring diagrams for proper connections.

Remote Zone Sensor (BAYSENS077*)

This electronic sensor can be used with BAYSENS106*, 108*, 110*, 119* Remote Panels. When this sensor is wired to a BAYSENS119* remote panel, wiring must be 18 AWG shielded twisted pair (Belden 8760 or equivalent). Refer to the specific remote panel for wiring details.

Wireless Zone Sensor (BAYSENS050*)

This electronic sensor features five system settings (Auto, Off, Cool, Heat, and Emergency Heat) and with On and Auto fan settings. It is a manual or auto changeover control with dual setpoint capability. Other features include a timed override function, lockable system settings, and Fahrenheit or Celsius temperature display. Included with the wireless zone sensor will be a receiver that is to be mounted inside the unit, a mounting bracket, and a wire harness.

High Temperature Sensor (BAYFRST001*)

This sensor connects to the RTRM Emergency Stop Input located on the LTB and provides high limit “shutdown” of the unit and requires a manual reset. The sensor is used to detect high temperatures due to fire in the air conditioning or ventilation ducts. The sensor is designed to mount directly to the sheet metal duct. Each kit contains two sensors. The return air duct sensor (X1310004001) is set to open at 135°F. The supply air duct sensor (X1310004002) is set to open at 240°F. The control can be reset after the temperature has been lowered approximately 25°F below the cutout setpoint.

Evaporator Frost Control

This input incorporates the Frostat™ control (FOS) located on the indoor coil and can be activated by closing a field supplied contact installed in parallel with the FOS.

If this circuit is closed before the compressor is started, the compressor will not be allowed to operate. Anytime this circuit is closed for 1 continuous second during compressor operation, the compressor for that circuit is immediately turned “Off”. The compressor will not be allowed to restart for a minimum of 3 minutes should the FOS open.

Frostat™ is standard on multi-speed indoor motors and single zone VAV products (SZVAV).

Smoke Detector Sensor (Optional)

This sensor is only applicable on units equipped with a RTOM. It provides high limit “shutdown” of the unit and requires a manual reset. The sensor is used to detect smoke due to fire in the air conditioning or ventilation ducts.

Important:

- *The supply air smoke detector samples supply air. The return and plenum air smoke detectors sample return air. The smoke detectors are designed to shut off the unit if smoke is sensed in the supply air stream or return air stream. This function is performed by sampling the airflow entering the unit at the return air opening. Follow the instructions provided below to assure that the airflow through the unit is sufficient for adequate sampling. Failure to follow these instructions will prevent the smoke detectors from performing it's design function.*
- *Airflow through the unit is affected by the amount of dirt and debris accumulated on the indoor coil and filters. To insure that airflow through the unit is adequate for proper sampling by the return air smoke detector, complete adherence to the maintenance procedures, including recommended intervals between filter changes, and coil cleaning is required.*
- *Periodic checks and maintenance procedures must be performed on the smoke detector to insure that it will function properly. For detailed instructions concerning these checks and procedures, refer to the appropriate section(s) of the smoke detector Installation and Maintenance Instructions provided with the literature package for this unit.*

In order for the supply air smoke detector or return air smoke detector to properly sense smoke in the supply air stream or return air stream, the air velocity entering the smoke detector unit must be between 500 and 4000 feet per minute. Equipment covered in this manual will develop an airflow velocity that falls within these limits over the entire airflow range specified in the evaporator fan performance tables.

Phase Monitoring protection

Precedent units with 3-phase power are equipped with phase monitoring protection as standard. These devices protect motors and compressors against problems caused by phase loss, phase imbalance, and phase reversal indication.

This sensor monitors voltage between the 3 conductors of the 3 phase power supply. Two LED lights are provided. The green light indicates that a balanced 3 phase supply circuit is properly connected. The red light indicates that unit operation has been prevented. There are two conditions that will prevent unit operation. The power supply circuit is not balanced with the proper phase sequence of L1, L2, L3 for the 3 conductors of a 3 phase circuit. The line to line voltage is not between 180 volts and 633 volts.

Human Interface - 5 Inch Color Touchscreen (Optional)

The 5 inch Color Touchscreen Human Interface provides an intuitive user interface to the rooftop unit that speeds up unit commissioning, shortens unit troubleshooting times, and enhances preventative maintenance measures. The human interface includes several features including:

- Data trending capabilities by means of time series graphs.
- Historical alarm messages.
- Real-time sensor measurements.
- On board system setpoints.
- USB port that enables the downloading of component runtime information as well as trended historical sensor data.
- Customized reports.

Pre-Installation

⚠WARNING

Fiberglass Wool!

Exposure to glass wool fibers without all necessary PPE equipment could result in cancer, respiratory, skin or eye irritation, which could result in death or serious injury. Disturbing the insulation in this product during installation, maintenance or repair will expose you to airborne particles of glass wool fibers and ceramic fibers known to the state of California to cause cancer through inhalation.
You MUST wear all necessary Personal Protective Equipment (PPE) including gloves, eye protection, a NIOSH approved dust/mist respirator, long sleeves and pants when working with products containing fiberglass wool.

Precautionary Measures:

- **Avoid breathing fiberglass dust.**
- **Use a NIOSH approved dust/mist respirator.**
- **Avoid contact with the skin or eyes.Wear long sleeved, loose-fitting clothing, gloves, and eye protection.**
- **Wash clothes separately from other clothing; rinse washer thoroughly.**
- **Operations such as sawing, blowing, tear-out, and spraying may generate fiber concentrations requiring additional respiratory protection. Use the appropriate NIOSH approved respirator.**

First Aid Measures:

- **Eye Contact - Flush eyes with water to remove dust. If symptoms persist, seek medical attention.**
- **Skin Contact -Wash affected areas gently with soap and warm water after handling.**

Precautionary Measures

- Avoid breathing fiberglass dust.
- Use a NIOSH approved dust/mist respirator.
- Avoid contact with the skin or eyes. Wear long-sleeved, loose-fitting clothing, gloves, and eye protection.
- Wash clothes separately from other clothing: rinse washer thoroughly.
- Operations such as sawing, blowing, tear-out, and spraying may generate fiber concentrations requiring additional respiratory protection. Use the appropriate NIOSH approved respiration in these situations.

First Aid Measures

Eye Contact - Flush eyes with water to remove dust. If symptoms persist, seek medical attention.

Skin Contact - Wash affected areas gently with soap and warm water after handling.

Dimensions and Weights

Figure 1. Typical installation clearances for single and multiple unit applications

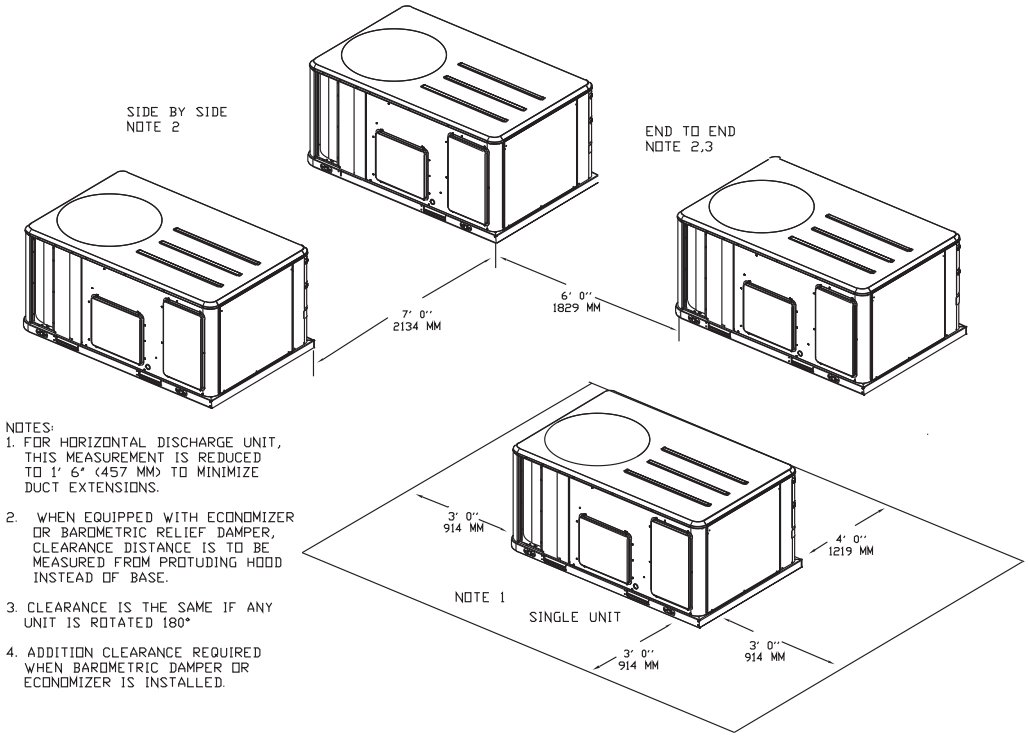

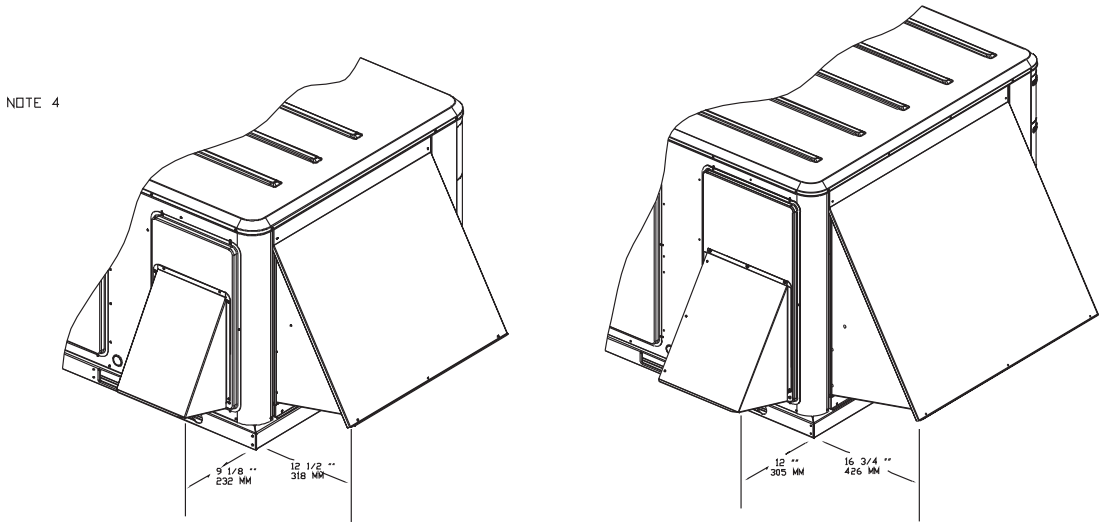

WSC036-048H, W/DHC036H Units

WSC060H, WSC092-120H, W/DHC048-120H Units

⚠WARNING

Heavy Objects!

Failure to properly lift waterbox could result in death or serious injury.
Each of the individual cables (chains or slings) used to lift the waterbox must be capable of supporting the entire weight of the waterbox. The cables (chains or slings) must be rated for overhead lifting applications with an acceptable working load limit. Refer to the waterbox weights table.

⚠WARNING

Improper Unit Lift!

Failure to properly lift unit in a LEVEL position could result in unit dropping and possibly crushing operator/ technician which could result in death or serious injury, and equipment or property-only damage.
Test lift unit approximately 24 inches (61 cm) to verify proper center of gravity lift point. To avoid dropping of unit, reposition lifting point if unit is not level.

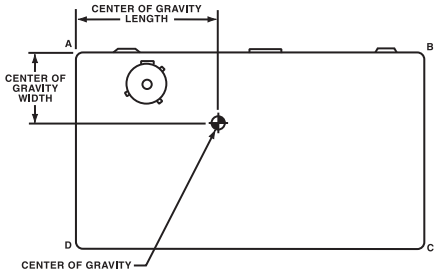

Table 1. Maximum unit and corner weights (lbs) and center of gravity dimensions (in.)

	Unit	Maximum Model Weights[a]		Corner Weights[b]				Center of Gravity (in.)	
Tons	Model No.	Shipping	Net	A	B	C	D	Length	Width
3	WSC036H	612	507	144	122	110	130	32	21
4	WSC048H	645	540	165	131	108	136	31	20
5	WSC060H	777	682	228	177	114	163	38	22
7.5	WSC092H	894	796	252	204	163	177	41	23
8.5	WSC102H	927	829	286	183	195	164	40	23
10	WSC120H	948	850	303	170	218	159	40	24
3	WHC036H	619	514	142	120	111	142	31	22
4	WHC048H	768	673	222	175	114	162	38	22
5	WHC060H	773	678	225	176	114	162	38	22
6	WHC074H	927	829	193	295	65	276	38	22
7.5	WHC092H	927	829	193	295	65	276	38	22
8.5	WHC102H	953	855	199	306	67	283	39	22
10	WHC120H	1433	1228	357	343	259	269	49	27
3	DHC036H	658	553	145	137	125	145	33	22
4	DHC048H	845	750	234	192	146	178	40	23
5	DHC060H	849	754	235	193	147	179	40	23
6	DHC074H	990	892	216	324	69	283	39	21
7.5	DHC092H	1004	906	218	330	70	288	39	21
8.5	DHC102H	1016	918	220	336	70	292	39	21
10	DHC120H	1499	1294	402	313	290	289	47	28

(a) Weights are approximate.
(b) Corner weights are given for information only.

Figure 2. Rigging and center-of-gravity data

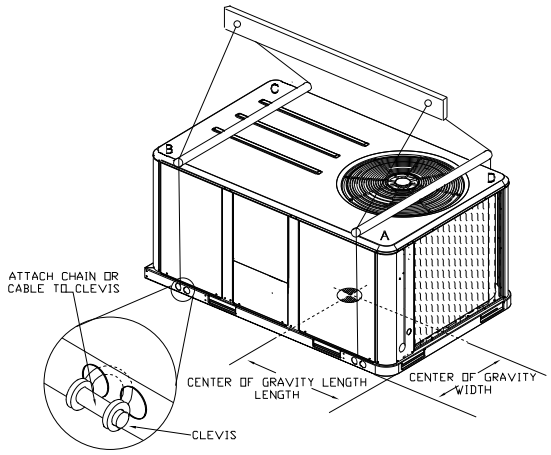

Table 2. Factory installed options (fiops)/accessory net weights (lbs)[(a),(b)]

Accessory	WSC036H-048H, W/DHC036H Net Weight 3 to 4 Tons	WSC060H, W/DHC048-060H Net Weight 4 to 5 Tons	WSC092-120H, W/DHC074-102H Net Weight 6 to 10 Tons	W/DHC120H Net Weight 10 Tons
460V/575V IDM Transformer[(c)]	29	29	—	—
Barometric Relief	7	10	10	10
Coil Guards	12	20	20	30
Economizer	26	36	36	36
Electric Heaters[(d)]	15	30	30 /44[(e)]	50
Hinged Doors	10	12	12	12
Low Leak Economizer	68	93	93	93
Manual Outside Air Damper	16	26	26	26
Motorized Outside Air Damper	20	30	30	30
Oversized Motor	5	8	8	—
Powered Convenience Outlet	38	38	38	50
Powered Exhaust	40	80	80	80
Roof Curb	61	78	78	89
Smoke Detector, Supply	5	5	5	5
Smoke Detector, Return	7	7	7	7
Stainless Steel Heat Exchanger[(f)]	4	6	—	—
Through-the-Base Electrical	8	13	13	13
Through-the-Base Gas[(f)]	5	5	—	—
Unit Mounted Circuit Breaker	5	5	5	5
Unit Mounted Disconnect	5	5	5	5

(a) Weights for options not listed are < 5 lbs.
(b) Net weight should be added to unit weight when ordering factory-installed accessories.
(c) Applicable to W/DHC 460/575V units.
(d) Applicable to heat pump units only (W*C).
(e) Larger weight applies to units with variable speed fan.
(f) Applicable to dual fuel units only (D*C).

Figure 3. Heat pump - 3 to 4 tons standard efficiency, 3 tons high efficiency

Note: 2-in. electrical connection: single point power when heat installed (WSC, W/DHC)

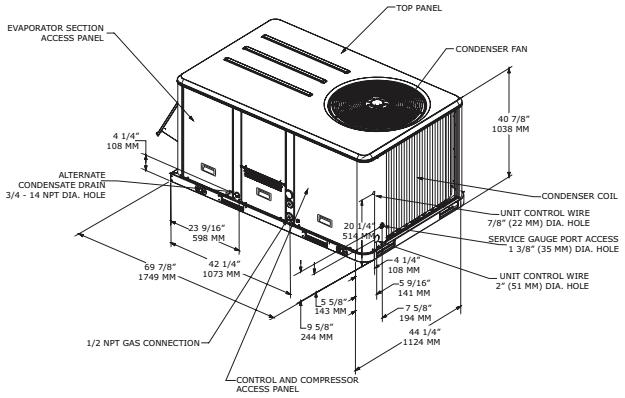

Figure 4. Heat pump - 3 to 4 tons standard efficiency, 3 tons high efficiency - downflow airflow supply/return - through-the-base utilities

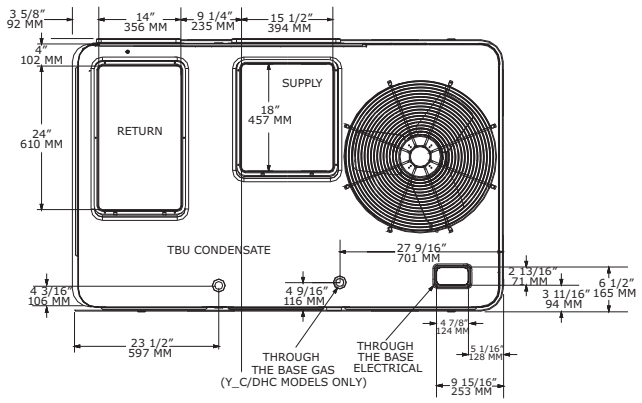

Figure 5. Heat pump - 3 to 4 tons standard efficiency, 3 tons high efficiency - horizontal airflow supply/return

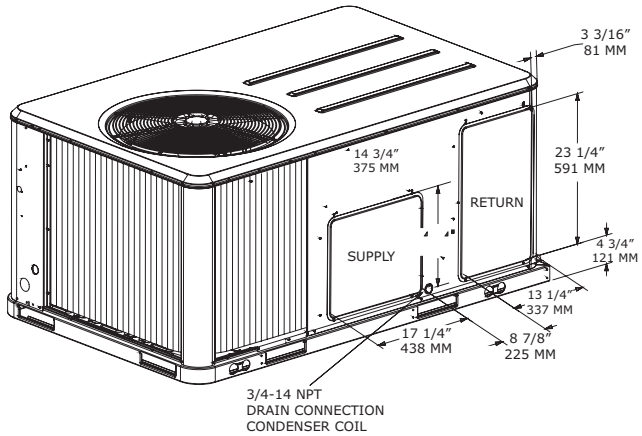

Figure 6. Heat pump - 3 to 4 tons standard efficiency, 3 tons high efficiency - unit clearance and roof opening

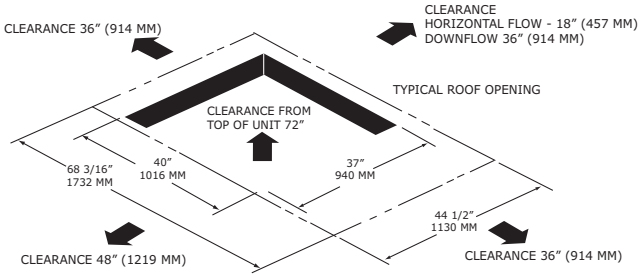

Figure 7. Heat pump - 3 to 4 tons standard efficiency, 3 tons high efficiency - roof curb

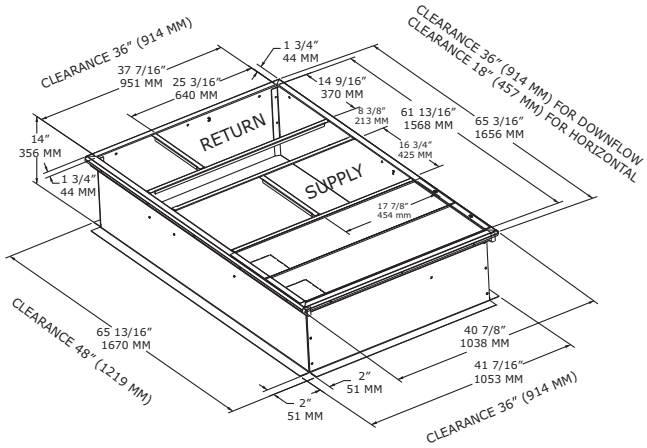

Figure 8. Heat pump - 3 to 4 tons standard efficiency, 3 tons high efficiency - downflow duct connections - field fabricated

Note: Reference tabular information for duct clearance to combustible materials in the application consideration chapter.

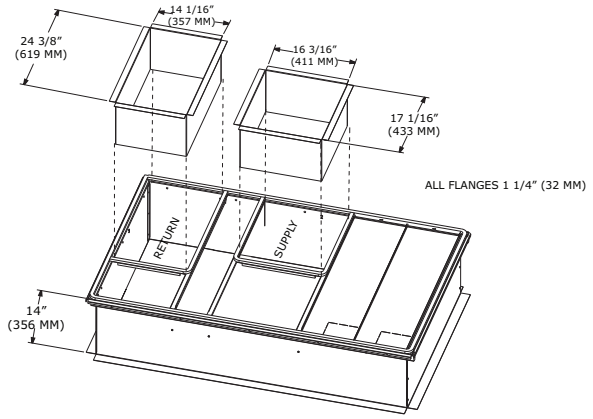

Figure 9. Heat pump - 3 to 4 tons standard efficiency, 3 tons high efficiency - economizer, manual or motorized fresh air damper; power exhaust

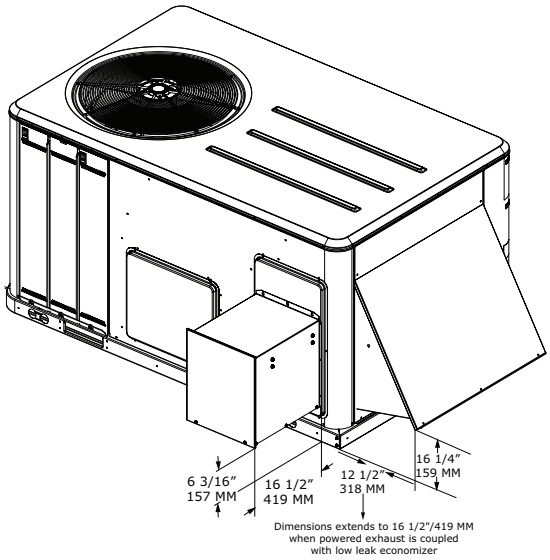

Figure 10. Heat pump 3 to 4 tons standard efficiency, 3 tons high efficiency - economizer and barometric relief damper hood

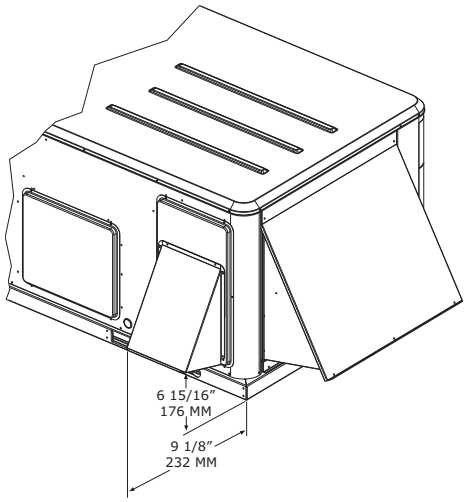

Figure 11. Heat pump - 3 to 4 tons standard efficiency, 3 tons high efficiency - swing diameter for hinged door(s) option

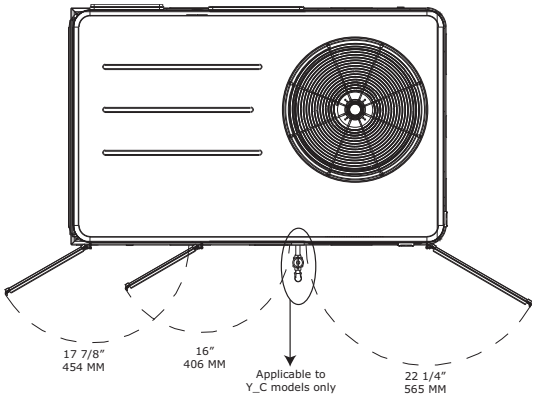

Figure 12. Heat pump - 5 tons standard efficiency, 4 to 5 tons high efficiency

Note: 2-in. electrical connection: single point power when heat installed (WSC, W/DHC)

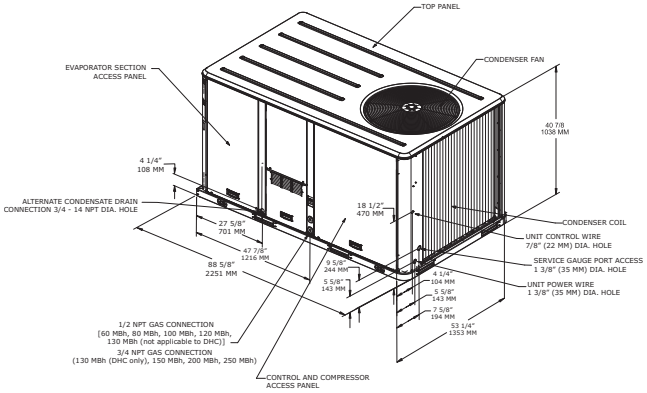

Figure 13. Heat pumps - 5 to 10 tons standard efficiency, 4 to 8.5 tons high efficiency - downflow airflow supply/return - through-the-base utilities

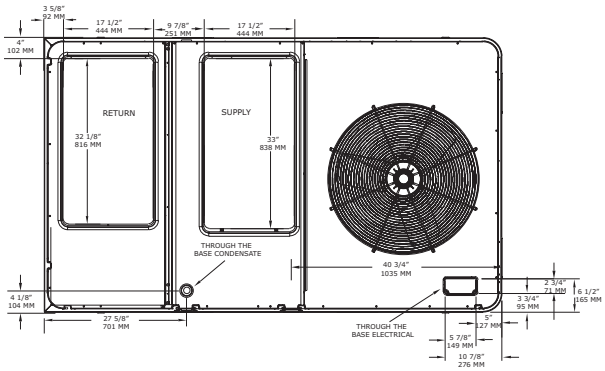

Figure 14. Heat pumps - 5 to 10 tons standard efficiency, 4 to 8.5 tons high efficiency - horizontal airflow supply and return

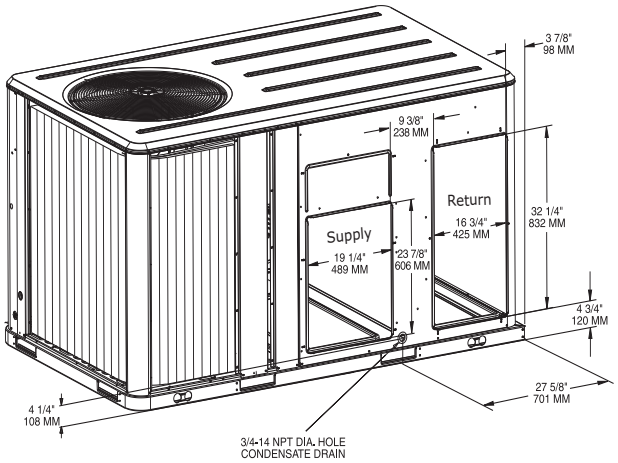

Figure 15. Heat pumps - 5 to 10 tons standard efficiency, 4 to 8.5 tons high efficiency - unit clearance and roof opening

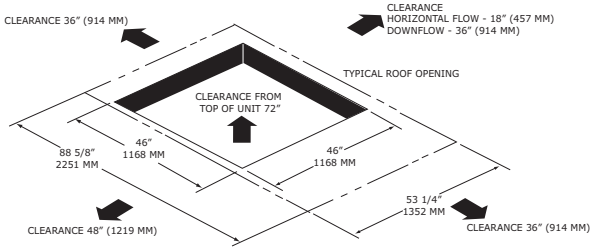

Figure 16. Heat pumps - 5 to 10 tons standard efficiency, 4 to 8.5 tons high efficiency - roof curb

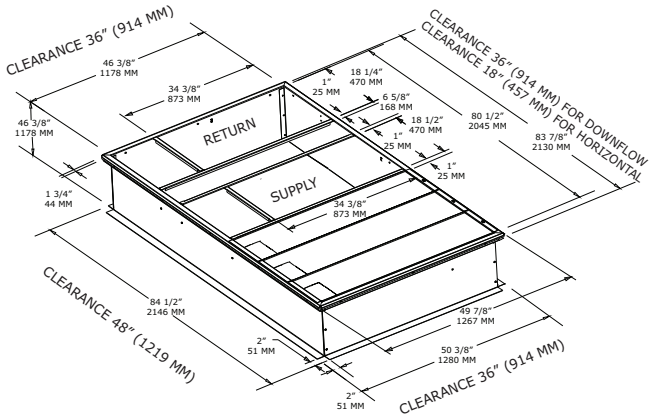

Figure 17. Heat pumps - 5 to 10 tons standard efficiency, 4 to 8.5 tons high efficiency - downflow duct connections field fabricated

Note: Reference tabular information for duct clearance to combustible materials in the Installation chapter.

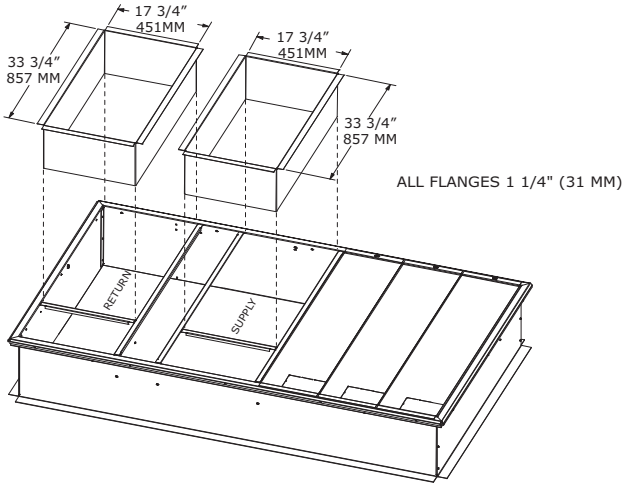

Figure 18. Heat pumps - 5 to 10 tons standard efficiency, 4 to 8.5 tons high efficiency - power exhaust

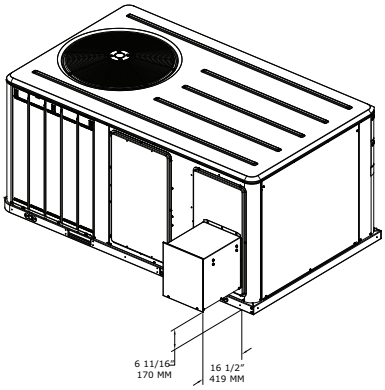

Figure 19. Heat pumps - 5 to 10 tons standard efficiency, 4 to 10 tons high efficiency - economizer, manual or motorized fresh air damper

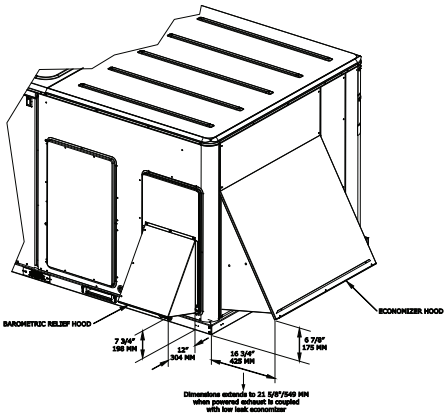

Figure 20. Heat pumps - 5 to 10 tons standard efficiency, 4 to 8.5 tons high efficiency - swing diameter for hinged door(s) option

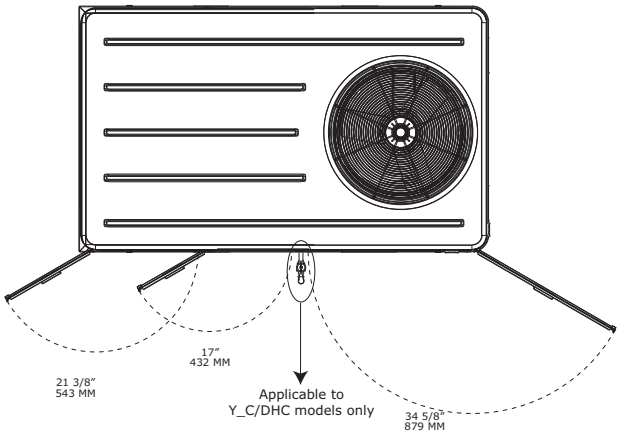

Figure 21. Heat pump - 7.5 to 10 tons standard efficiency, 6 to 8.5 tons high efficiency

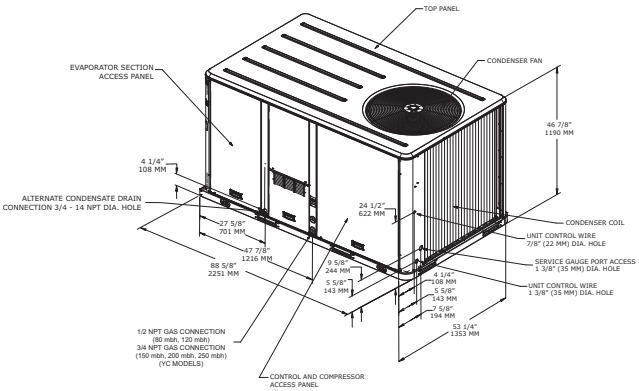

Figure 22. Heat pump - 10 tons high efficiency - downflow airflow supply/return through-the-base utilities

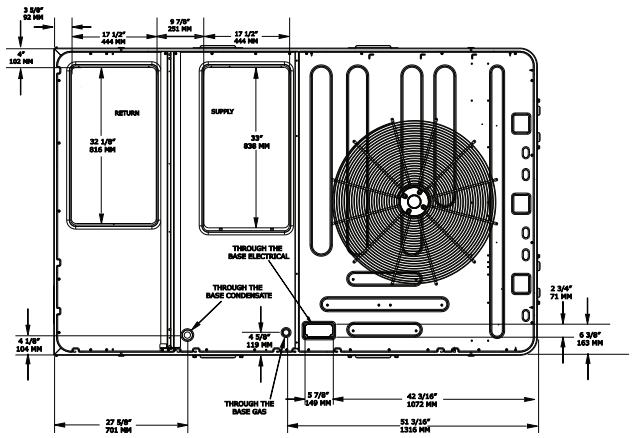

Figure 23. Heat pump - 10 tons high efficiency

Note: 2-in. Electrical Connection: single point power when heat installed.

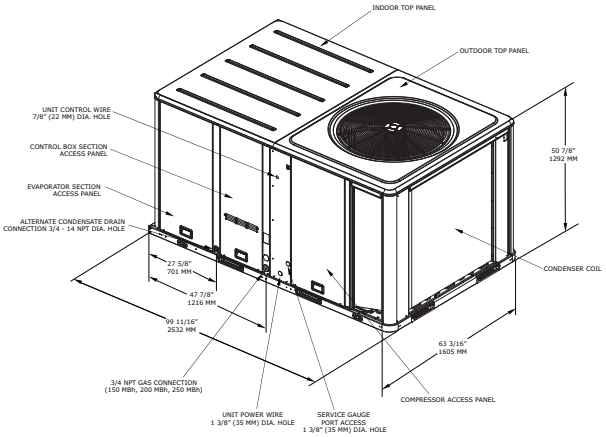

Figure 24. Heat pump - 10 tons high efficiency - unit clearance and roof opening

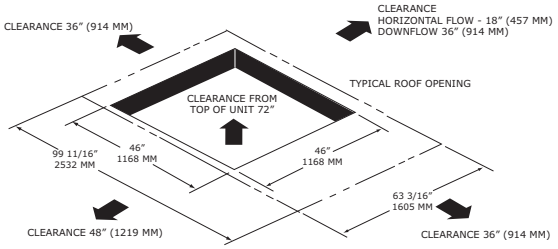

Figure 25. Heat pump - 10 tons high efficiency - roof curb

Note: 2-in. Electrical Connection: single point power when heat installed.

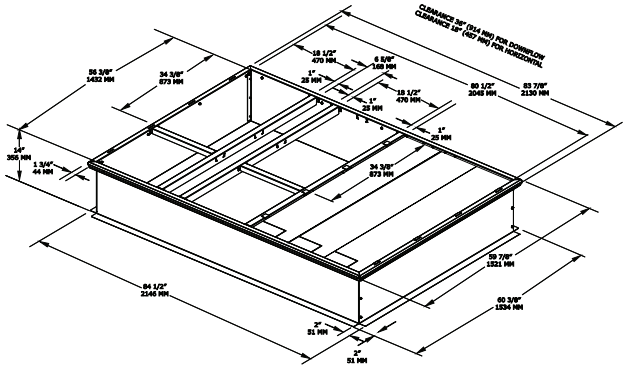

Figure 26. Heat pumps - 10 tons high efficiency - downflow duct connections field fabricated

Note: Reference tabular information for duct clearance to combustible materials in the application consideration chapter.

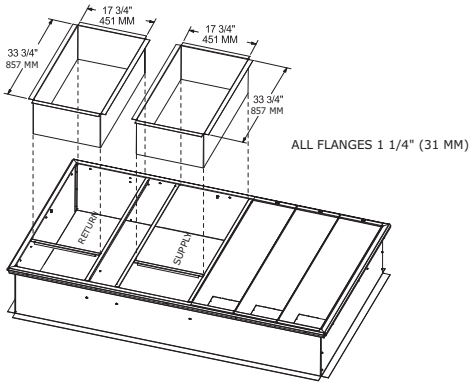

Figure 27. Heat pumps - 10 tons high efficiency - power exhaust

Note: Reference tabular information.

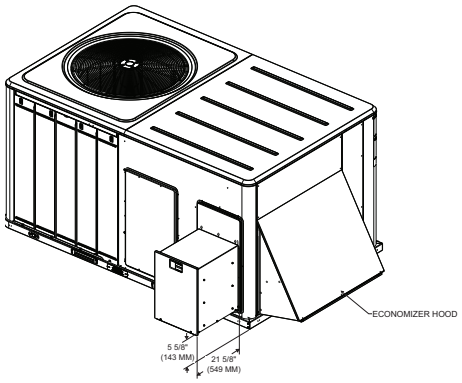

Figure 28. Heat pumps - 10 tons high efficiency -swing diameter for hinged door(s) option

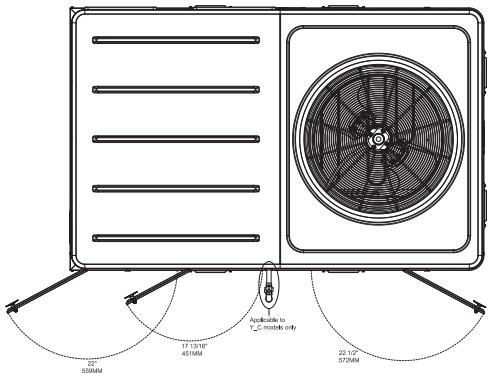

Installation

Foundation

Horizontal Units

If the unit is installed at ground level, elevate it above the snow line. Provide concrete footings at each support location with a “full perimeter” support structure or a slab foundation for support. For the unit’s operating and point loading weights when constructing a footing foundation, refer to the maximum unit/corner weights table in the weights section of this manual.

If anchoring is required, anchor the unit to the slab using hold down bolts or isolators. Isolators should be installed to minimize the transmission of vibrations into the building.

⚠WARNING

Risk of Roof Collapsing!

Failure to ensure proper structural roof support could cause the roof to collapse, which could result in death or serious injury and property damage.
Confirm with a structural engineer that the roof structure is strong enough to support the combined weight of the roofcurb, the unit, and any accessories.

NOTICE

Roof Damage!

System contains oil and refrigerant under high pressure. Roofs should be protected from exposure to oils and refrigerant in the system. If rooftop is not protected, damage to the roof may occur.

For rooftop applications, ensure the roof is strong enough to support the combined unit and support structural weight. If anchoring is required, anchor the unit to the roof with hold-down bolts or isolators.

Check with a roofing contractor for proper waterproofing procedures.

Ductwork

Supply and return air openings as viewed from the rear of the unit are shown in the following drawings.

Figure 29. Heat pump - 3 to 4 tons standard efficiency, 3 tons high efficiency - horizontal airflow supply/return

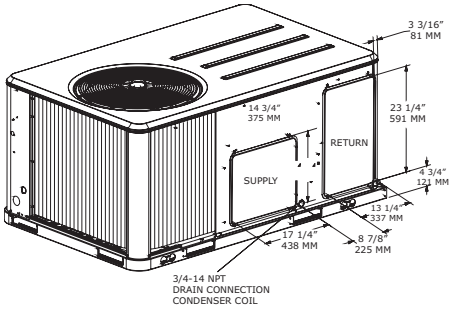

Figure 30. Heat pumps - 5 to 10 tons standard efficiency, 4 to 8.5 tons high efficiency - horizontal airflow supply and return

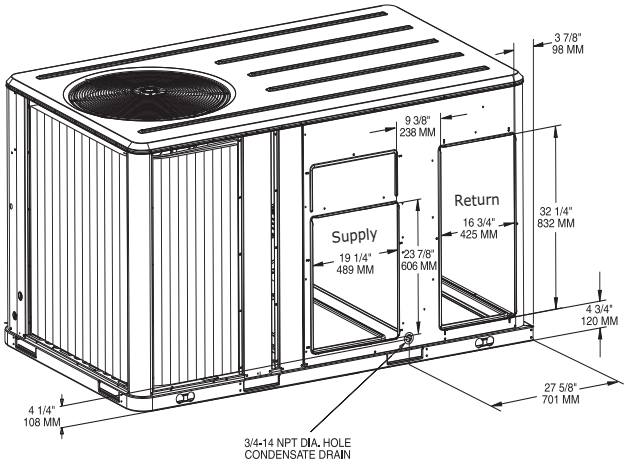

Figure 31. Heat pump - 10 tons high efficiency - horizontal airflow supply and return

Note: All dimensions are in inches/millimeters.

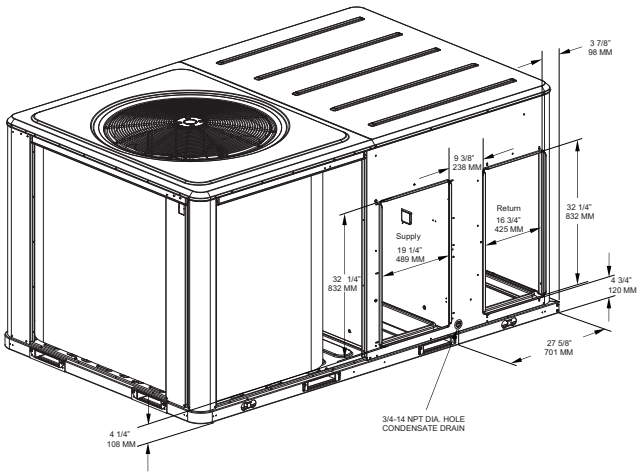

Note: *Duct covers are swapped for airflow conversion. For mixed airflow conversions, additional duct covers will be required.*

Supply and return air openings as viewed from a downflow configuration are shown in the following drawings.

Elbows with turning vanes or splitters are recommended to minimize air noise due to turbulence and to reduce static pressure.

When attaching the ductwork to the unit, provide a water- tight flexible connector at the unit to prevent operating sounds from transmitting through the ductwork. All outdoor ductwork between the unit and the structure should be weather proofed after installation is completed.

Figure 32. Heat pump - 3 to 4 tons standard efficiency, 3 tons high efficiency - downflow airflow supply/return - through-the-base utilities

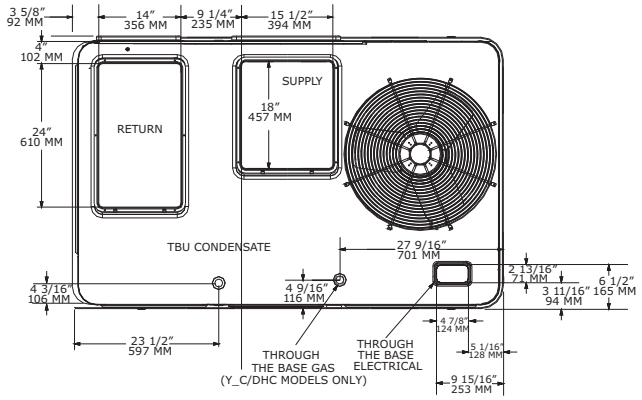

Figure 33. Heat pumps - 5 to 10 tons standard efficiency, 4 to 8.5 tons high efficiency - downflow airflow supply/return - through-the-base utilities

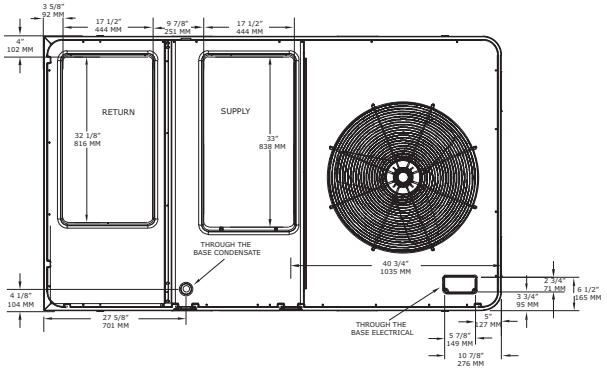

Figure 34. Heat pump - 10 tons high efficiency - downflow airflow supply/return through-the-base utilities

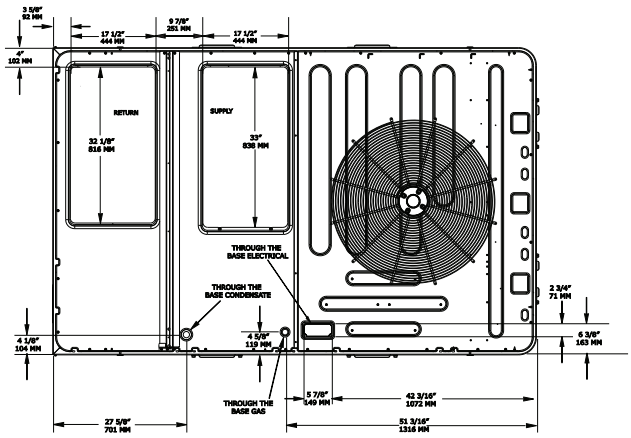

Roof Curb

The roof curbs for these units consists of a "full perimeter" enclosure to support the unit just inside of the unit base rail. The W/DHC120H unit contains a support base alignment rail and will extend past the end of the roof curb as shown in figures below.

Before installing any roof curb, verify;

- It is the correct curb for the unit,
- The necessary gaskets and hardware are included,
- The purposed installation location provides the required clearance for proper operation.
- Insure that the curb is level and square. The top surface of the curb must be true to assure an adequate curb-to-unit seal.

⚠WARNING

Combustible Materials!

Failure to maintain proper clearance between the unit and combustible materials could cause a fire which could result in death, serious injury, or property damage.
Refer to unit nameplate and installation instructions for proper clearances.

Verify that appropriate materials were used in the construction of roof and ductwork. Combustible materials should not be used in the construction of ductwork or roof curb that is in close proximity to heater elements or any hot surface. Any combustible material on the inside of the unit base should be removed and replaced with appropriate material.

Step-by-step curb assembly and installation instructions ship with each accessory roof curb kit. Follow the instructions carefully to assure proper fit-up when the unit is set into place.

Note: *To assure proper condensate flow during operation, as well as proper operation of the condensate overflow switch (if equipped), the unit and curb must be level.*

If the unit is elevated, a field constructed catwalk around the unit is strongly recommended to provide easy access for unit maintenance and service.

Recommendations for installing the Supply Air and Return Air ductwork joining the roof curb are included in the curb instruction booklet. Curb ductwork must be fabricated and installed by the installing contractor before the unit is set into place.

Note: *For sound consideration, cut only the holes in the roof deck for the ductwork penetrations. Do not cut out the entire roof deck within the curb perimeter.*

Figure 35. View for base to roof curb alignment W/DHC120H on 50 x 84 roof curb

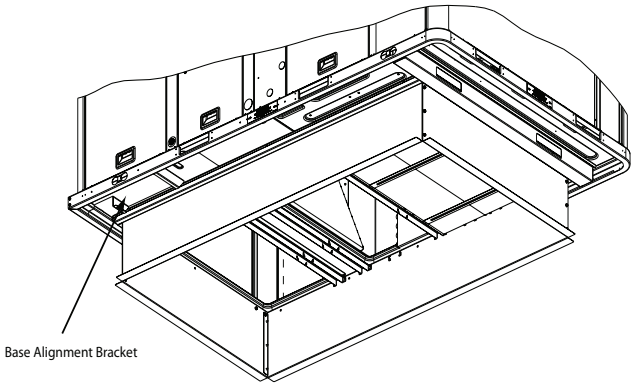

Figure 36. View for base to roof curb alignment W/DHC120H on 60 x 84 roof curb

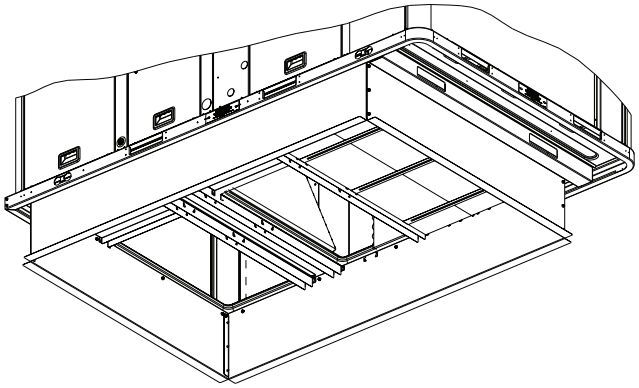

Model Number	Clearance required from duct to combustible surfaces (inches)
WSC036H	0
WSC048H	0
WSC060H	0
WSC092H	1
WSC102H	1
WSC120H	1
W/DHC036H	0
W/DHC048H	0
W/DHC060H	0
D/WHC074H	1
D/WHC092H	1
D/WHC102H	1
D/WHC120H	1

If a Curb Accessory Kit is not used:

- The ductwork can be attached directly to the factory-provided flanges around the unit's supply and return air openings. Be sure to use flexible duct connections at the unit.
- For "built-up" curbs supplied by others, gaskets must be installed around the curb perimeter flange and the supply and return air opening flanges.

Rigging

⚠WARNING

Heavy Objects!

Failure to properly lift waterbox could result in death or serious injury.
Each of the individual cables (chains or slings) used to lift the waterbox must be capable of supporting the entire weight of the waterbox. The cables (chains or slings) must be rated for overhead lifting applications with an acceptable working load limit. Refer to the waterbox weights table.

A Rigging illustration and Center-of-Gravity dimensional data table is shown in the weights section. Refer to the typical unit operating weights table before proceeding.

1. Remove all drill screws fastening wood protection to metal baserail. Remove all screws securing wooden protection to wooden top crate.

   On 6 to 10 tons high efficiency units, remove wire ties from outdoor grill.
2. Remove wooden top crate.

⚠WARNING

Improper Unit Lift!

Failure to properly lift unit in a LEVEL position could result in unit dropping and possibly crushing operator/ technician which could result in death or serious injury, and equipment or property-only damage.
Test lift unit approximately 24 inches (61 cm) to verify proper center of gravity lift point. To avoid dropping of unit, reposition lifting point if unit is not level.

3. Rig the unit as shown in the weights section. Attach adequate strength lifting slings to all four lifting brackets in the unit base rail. Do not use cables, chains, or slings except as shown.
4. Install a lifting bar, as shown in the weights section to protect the unit and to facilitate a uniform lift. The minimum distance between the lifting hook and the top of the unit should be 7 feet.
5. Test-lift the unit to ensure it is properly rigged and balanced, make any necessary rigging adjustments.

Figure 37. Fork lift pockets (all heat pump units except W/DHC120H)

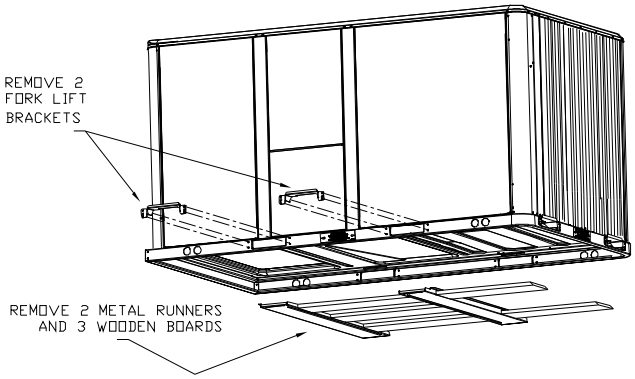

Figure 38. Fork lift pockets (W/DHC120H)

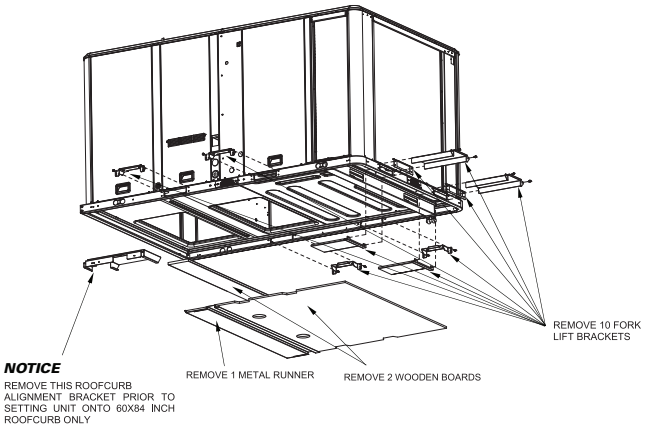

6. Lift the unit enough to allow the removal of base fork pocket protection components as shown in the following figures.
7. When 10 tons units are installed on smaller existing roof curb (50-in.x 84-in.) for replacement applications, do not remove alignment bracket. This bracket helps assure proper alignment of duct openings.
8. Downflow units; align the base rail of the unit with the curb rail while lowering the unit onto the curb. Make sure that the gasket on the curb is not damaged while positioning the unit.

General Unit Requirements

The checklist listed below is a summary of the steps required to successfully install a commercial unit. This checklist is intended to acquaint the installing personnel with what is required in the installation process. It does not replace the detailed instructions called out in the applicable sections of this manual.

- Check the unit for shipping damage and material shortage; file a freight claim and notify appropriate sales representative.
- Verify correct model, options and voltage from unit nameplate.
- Verify that the installation location of the unit will provide the required clearance for proper operation.
- Assemble and install the roof curb (if applicable). Refer to the latest edition of the curb installers guide that ships with each curb kit.
- Fabricate and install ductwork; secure ductwork to curb.
- Rig the unit.
- Set the unit onto the curb; check for levelness.
- Ensure unit-to-curb seal is tight and without buckles or cracks.
- Install and connect a condensate drain line to the evaporator drain connection.

Note: *Condensate Overflow Switch (if equipped) will not work if unit is not level or slightly sloped toward switch.*

Factory Installed Economizer

- Ensure the economizer has been pulled out into the operating position. Refer to the economizer installers guide for proper position and setup.
- Install all access panels.

Temperature Limit Switch Usage for Electric Heat Units

Units are factory shipped in the downflow discharge configuration but can be field converted to a horizontal discharge configuration. Some, but not all units require a different TCO-A limit switch, which is wire tied near the terminal block in the heater compartment if horizontal discharge configuration is used. See Figure 44, p. 26 for the location of TCO-A.

Horizontal Discharge Conversion WSC036H, WSC048H, W/DHC036H

Note: *3 to 4 tons standard efficiency and 3 tons high efficiency units supply cover to supply opening and return cover to return opening.*

- Supplies needed by installer for conversion: 3 oz. tube of High Temperature RTV sealant. (500°F/260°C: Similar to Dow Corning 736).

Important: *Failure to use recommended sealant could result in unit performance loss.*

If a unit is to be converted to a horizontal discharge, the following conversion must be performed:

1. Remove RETURN and SUPPLY duct covers.
2. Locate supply cover. Apply ¼ in. (6mm.) continuous bead of 500°F RTV sealant to the flange as shown in the following drawing.

Figure 39. Supply duct cover

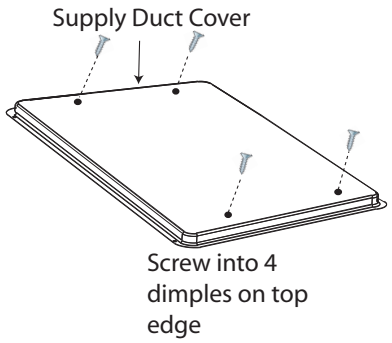

3. Position SUPPLY DUCT COVER as shown, rotate 90 degrees to allow entrance into supply opening.
4. Slide SUPPLY DUCT COVER into duct openings until inward edge of duct cover engages with the 2 retaining clips on the duct flanges. Secure the outward edge of each duct cover with 2 screws.

Figure 40. Supply and return openings

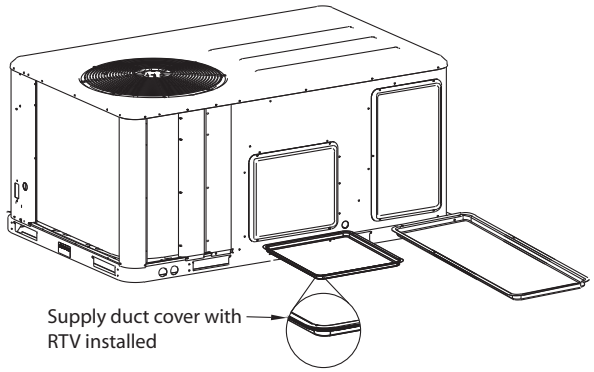

5. Slide RETURN DUCT COVER (insulation side up) into supply opening until inward edge of duct cover engages with the 2 retaining clips on the duct flange. Secure outward edge of the duct cover with two screws.

Note: *Certain unit/electric heater combinations require a limit switch change out for horizontal airflow applications. Refer to the following instructions to determine if this process is required for the unit undergoing installation.*

6. After completing installation of the duct covers for horizontal discharge, proceed to TCO-1 instructions.

Horizontal Discharge Conversion WSC060H, WSC092-120H, W/DHC048-120H

Note: *5 to 10 tons standard efficiency units and 4 to 10 tons high efficiency supply cover to return opening and return cover to supply opening. For mixed airflow conversions, additional duct covers will be required.*

- Supplies needed by installer for conversion: 3 oz. tube of high Temperature RTV sealant. (500°F/260°C: Similar to Dow Corning 736).

Important: *Failure to use recommended sealant could result in unit performance loss.*

If a unit is to be converted to a Horizontal discharge, the following conversion must be performed:

1. Remove RETURN and SUPPLY duct covers.
2. Place SUPPLY DUCT COVER over downflow return opening. (insulation side down).
3. Using self-drilling screws, (or screws removed from duct cover), screw through dimples to attach Duct Cover to base.

Figure 41. Supply duct cover

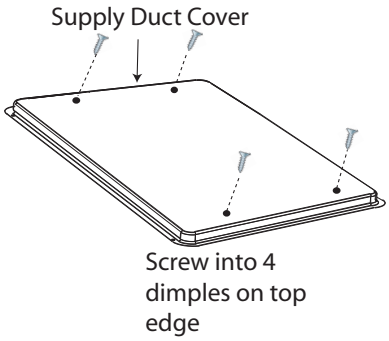

4. On original RETURN DUCT COVER, apply ¼-in. (6mm.) continuous bead of 500°F RTV sealant around flange (opposite insulation side), as shown.

Figure 42. Return duct cover

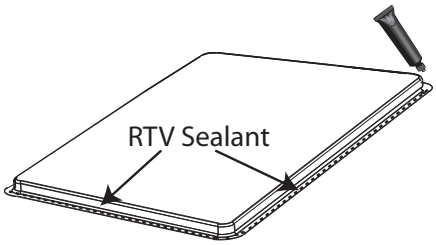

5. Slide RETURN DUCT COVER (insulation side up) into supply opening until inward edge of duct cover engages with the 2 retaining clips on the duct flange. Secure outward edge of the duct cover with two screws.

Figure 43. Supply and return openings

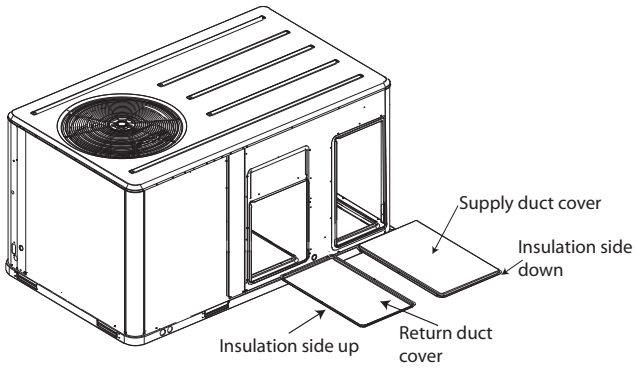

Notes:

- *If unit is equipped with Return Air Smoke Detector, refer to field conversion instructions for horizontal discharge before installing return air duct.*
- *Certain unit/electric heater combinations require a limit switch change out for horizontal airflow applications. Refer to the following instructions to determine if this process is required for the unit undergoing installation.*

6. After completing installation of the duct covers for horizontal discharge, proceed to TCO-A instructions.

TCO-A Instructions

If the unit being installed is listed in the following table and is equipped with the corresponding model number of factory installed electric heater package in the table, the limit control TCO-A must be replaced with the extra limit control shipped in the heater compartment. Replace TCO-A following the instructions in Step 1 through Step 3 below. If the unit being installed does not have a factory installed electric heater package or is equipped with a factory installed electric heater model that does not correspond to any in this table, skip Step 1 through Step 3 and go on to next step in the installation process.

Table 3. TCO-A replaced for horizontal duct configuration

Unit Model Number	Electric Heater Model Number	TCO-A location
WSC092H3	BAYHTRU336	Center
WSC092H4	BAYHTRU436	Center
WSC102H3	BAYHTRU336	Center
WSC102H4	BAYHTRU436	Center
WSC120H4	BAYHTRA454	Right
WSC120HW	BAYHTRAW36, W54	Right

1. Remove the heater section access panel and open the electric heater dead front panel.
2. TCO-A is the limit control located in the central or right part of the heater mounting plate and that is located on the bottom of the two heater element assemblies. To replace this device, first remove the two wires connected to the terminals. Next, remove the two screws which secure it to the heater element mounting plate. Once TCO-A has been removed from the heater element mounting plate, discard this device.

Figure 44. TCO-A location

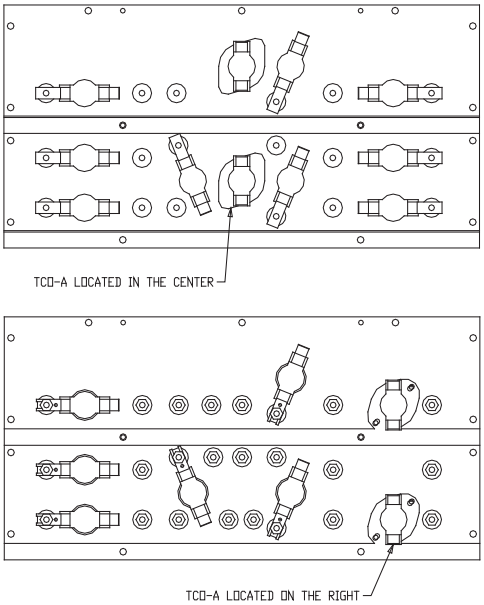

3. Obtain the replacement TCO-A which is secured by a wire tie near the electric heater terminal block in the heater compartment. Attach it to the heater element mounting plate with the two screws that were removed in Step 2 above. Connect the two wires that were un-hooked in Step 2 to the terminals on the new TCO-A. Refer to the heater package wiring diagram to assure that the wiring is connected properly.
4. Close the electric heater dead front panel and replace heat section access panel.

Return Air Smoke Detector

The factory installed Return Air Smoke Detector is installed in the downflow discharge position. No additional field setup is required.

If a unit is to be converted to Horizontal discharge, the following conversion must be performed:

1. If the unit has an economizer, it must be pulled out in the operating position.
2. Remove the 3 screws from the mounting brackets. Refer to downflow view for screw locations.

Note: *Refer to downflow view for screw locations.*

Figure 45. Downflow view

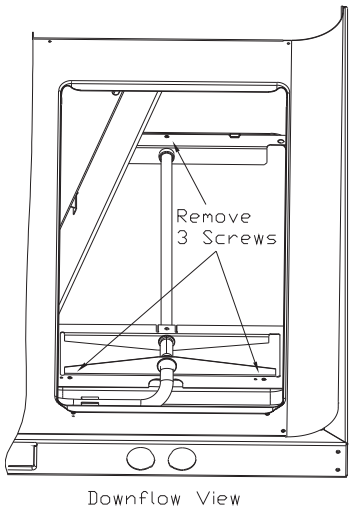

3. Lift the tube and bracket from the downflow duct opening. Rotate the tube and bracket assembly 180° ensuring that the holes on the copper sensing tube face away from the unit and face the return air ductwork.

Notes:

- *Refer to horizontal views below.*
- *Ensure that the flexible tubing lies flat on the base pan surface.*

4. Slide the top bracket down the copper sensing tube, insert the tab on the left side into the slot on the indoor coil block off and secure the right side of the bracket with one of the 3 screws removed in Step 2.

Note: *Refer to horizontal view.*

5. Using the remaining 2 screws removed in Step 2, secure the bottom bracket.

Note: *Refer to horizontal view below.*

Figure 46. Horizontal view

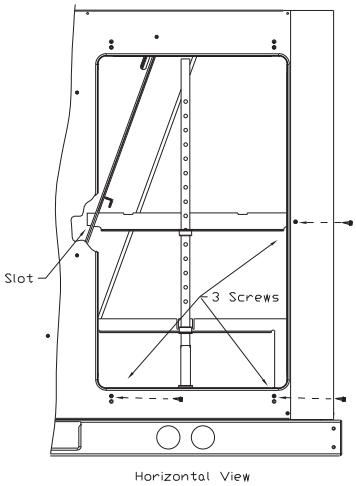

Air-Fi® Wireless Communication Interface

The factory installed wireless communications interface is installed in the downflow discharge position.

If a unit is to be converted to horizontal discharge, the following conversion must be performed:

1. If the unit has an economizer, it must be pulled out in the operating position.
2. Remove the screw from the mounting bracket. Refer to downflow view for screw and bracket location.

Figure 47. Wireless communication interface - downflow

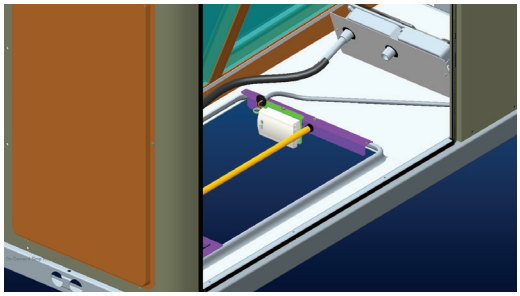

3. Mount the bracket in the horizontal discharge location. Refer to horizontal view for screw and bracket location.

Figure 48. Wireless communication interface - horizontal

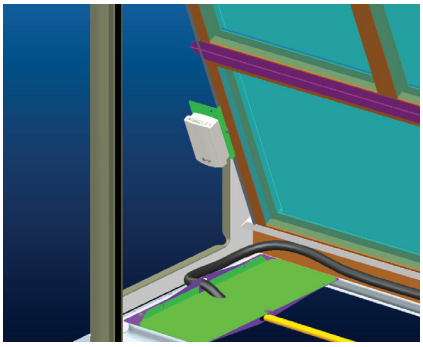

Note: *Cable ties must be removed to allow the cable to extend to the horizontal mounting location.*

Main Electrical Power Requirements

⚠WARNING

Hazardous Voltage w/Capacitors!

Failure to disconnect power and discharge capacitors before servicing could result in death or serious injury. Disconnect all electric power, including remote disconnects and discharge all motor start/run capacitors before servicing. Follow proper lockout/tagout procedures to ensure the power cannot be inadvertently energized. Verify with a CAT III or IV voltmeter rated per NFPA 70E that all capacitors have discharged.

⚠WARNING

Proper Field Wiring and Grounding Required!

Failure to follow code could result in death or serious injury. All field wiring MUST be performed by qualified personnel. Improperly installed and grounded field wiring poses FIRE and ELECTROCUTION hazards. To avoid these hazards, you MUST follow requirements for field wiring installation and grounding as described in NEC and your local/state/national electrical codes.

- Verify that the power supply complies with the unit nameplate specifications.
- Inspect all control panel components; tighten any loose connections.
- Connect properly sized and protected power supply wiring to a field-supplied/installed disconnect switch and to the main power terminal block (HTB1) in the unit control panel.
- Install proper grounding wires to an earth ground.

Note: *All field-installed wiring must comply with NEC and applicable local codes.*

Through-the-Base Gas Installation

The gas supply line must extend 4-in. above the base pan. The “Through-the-Base Gas” kit is located in the heat vestibule compartment. To gain access to the kit, remove the Heat Compartment access panel.

1. Remove the pipe assembly strapped to the manifold. Unscrew 90° elbow from 6½-in. nipple and slide rubber grommet off of nipple.
2. Remove the plastic plug from the hole in the center post and insert the grommet removed from 6½-in. pipe nipple.
3. Using pipe sealant, attach the 90° elbow to the gas supply line.
4. Disconnect the 5-in. pipe nipple and union from the “Through-the-Base Gas” kit assembly.
5. Using pipe sealant, attach the 6½-in. nipple and gas shutoff assembly to the 90° elbow on the gas supply line.
6. Using pipe sealant, attach the 5-in. pipe nipple and union to the street el attached to the gas valve.
7. Connect 5-in. pipe nipple and union to 6½-in. nipple and gas shutoff assembly.

Figure 49. Typical through-the-base gas installation

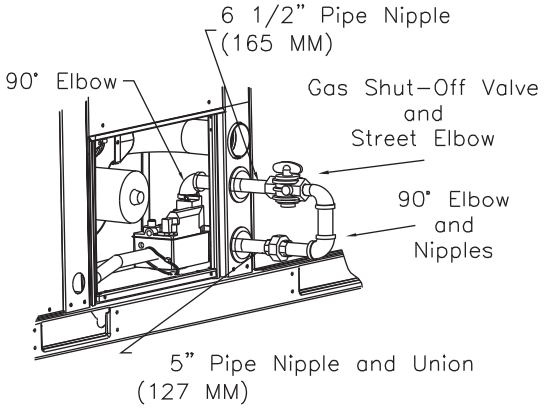

Requirements for Gas Heat

Note: *The unit gas train and optional through-the-base gas shut-off valve are rated at 1/2 PSIG maximum. A pressure reducing regulator is recommended to prevent this maximum from being exceeded. These components must be isolated during field gas piping test that exceed 1/2 PSIG. It is recommended that the field piping be capped prior to the unit gas train or optional through-the-base gas shut-off valve if present.*

- Gas supply line properly sized and connected to the unit gas train.
- All gas piping joints properly sealed.
- Gas piping leak checked with a soap solution. If piping connections to the unit are complete, do not pressurize piping in excess of 0.50 psig or 14-in. W.C. to prevent component failure.
- Drip leg Installed in the gas piping near the unit.
- Minimum gas supply pressure should be 4.5-in. W.C.
- Maximum gas supply pressure must not exceed 14.0-in. W.C.
- Manifold pressure for single stage heaters should be set to 3.3-in. W.C.
- Manifold pressure for two stage heaters should be set to 3.5-in. W.C. on HIGH FIRE and 1.8-in. W.C. on LOW FIRE.
- Flue Exhaust clear of any obstruction.

Electric Heat Requirements

- Verify that the power supply complies with the electric heater specifications on the unit and heater nameplate.
- Inspect the heater junction box and control panel; tighten any loose connections.
- Check electric heat circuits for continuity.

Low Voltage Wiring (AC and DC) Requirements

- Install the zone thermostat, with or without switching subbase.
- Connect properly sized control wiring to the proper termination points between the zone thermostat and the unit control panel.

Condensate Drain Configuration

⚠WARNING

Hazardous Voltage!

Failure to disconnect power before servicing could result in death or serious injury.
Disconnect all electric power, including remote disconnects before servicing. Follow proper lockout/tagout procedures to ensure the power can not be inadvertently energized. Verify that no power is present with a voltmeter.

An evaporator condensate drain connection is provided on each unit. Figure 29, p. 21 - Figure 34, p. 22 for the appropriate drain location.

The condensate drain pan is factory installed to drain condensate to the back side of the unit. See Figure 29, p. 21 - Figure 34, p. 22. It can be converted to drain condensate out the front side of the unit or through the base.

To convert drain condensate out the front of unit:

1. Remove evaporator access panel and supply air access panels.
2. Remove the support panel that the condensate drain pan exits through.
3. Slide the condensate drain pan out of the unit and rotate 180°.
4. Slide the condensate drain pan back into the unit, align the drain with the grommeted opening in the rear support panel and push until the coupling is seated in the grommet.
5. Replace the front support panel by aligning the panel with tabs in the raceway. Align the condensate drain pan support in the grommeted hole as the panel is put in place.
6. Replace evaporator access panel and supply air access panels.

To convert drain condensate through-the-base of unit:

1. Remove evaporator access panel and supply air access panels.
2. Remove the support panel that the condensate drain pan exits through.
3. Slide the condensate drain pan out of the unit.
4. Place on a level surface in the position it was removed from the unit.
5. Remove the plug knockout in the bottom of the drain pan to convert it to through the base drainage.
6. Plug the original condensate drain opening with a field supplied 3/4-in. NPT plug.
7. Slide the condensate drain pan back into the unit, align the drain support with the grommeted opening in the rear support panel and push until the support is seated in the grommet.
8. Replace the front support panel by aligning the panel with tabs in the raceway. Align the plugged condensate drain pan coupling in the grommeted hole as the panel is put in place.
9. Replace evaporator access panel and supply air access panels.

A condensate trap must be installed at the unit due to the drain connection being on the “negative pressure” side of the fan. Install the P-Trap using the guidelines in Figure 50, p. 29.

A condensate drain line must be connected to the P-Trap. Pitch the drain lines at least 1/2 inch for every 10 feet of horizontal run to assure proper condensate flow. Do not allow the horizontal run to sag causing a possible double-trap condition which could result in condensate backup due to “air lock”.

Figure 50. Condensate trap installation

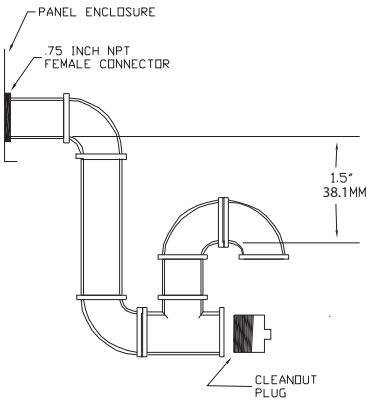

Drain Pan Removal (Units with Condensate Overflow Switch Option)

Before drain pan removal, the switch wire must be disconnected from wire tie on panel and/or any tape before drain pan can be removed.

Care must be taken so the wire does not catch on the bottom of indoor coil or any protrusion.

Note: *When reversing the drain pan, on some units, the condensate overflow switch will need to be moved to the second hole in its bracket to avoid contact with headers or indoor coil.*

Filter Installation

The quantity of filters is determined by unit size. Access to the filters is obtained by removing the filter access panel.

Refer to the unit Service Facts (shipped with each unit) for filter requirements.

Note: *Do not operate the unit without filters.*

Field Installed Power Wiring

⚠WARNING

Proper Field Wiring and Grounding Required!

Failure to follow code could result in death or serious injury. All field wiring MUST be performed by qualified personnel. Improperly installed and grounded field wiring poses FIRE and ELECTROCUTION hazards. To avoid these hazards, you MUST follow requirements for field wiring installation and grounding as described in NEC and your local/state/national electrical codes.

An overall dimensional layout for the field installed wiring entrance into the unit is illustrated in the Dimensions and Weights chapter. To insure that the unit's supply power wiring is properly sized and installed, follow the guidelines outlined below.

Verify that the power supply available is compatible with the unit's nameplate ratings. The available supply power must be within 10% of the rated voltage stamped on the nameplate. Use only copper conductors to connect the power supply to the unit.

NOTICE

Use Copper Conductors Only!

Failure to use copper conductors could result in equipment damage as the equipment was not designed or qualified to accept other types of conductors.

Note: *If the unit is not equipped with an optional factory installed non-fused disconnect switch or circuit breaker, a field supplied disconnect switch must be installed at or near the unit in accordance with the National Electrical Code (NEC latest edition).*

Standard Wiring

1. Location of the applicable electrical service entrance is illustrated in the Dimensions and Weights chapter. Complete the unit's power wiring connections at the main power terminal block (HTB1) if equipped; otherwise, connect at the Compressor Contactor (CC1). Refer to the customer connection diagram that is shipped with the unit for specific termination points.
2. Provide proper grounding for the unit in accordance with local and national codes.

Optional TBUE Wiring (Through-the-Base Electrical Option)

1. Location of the applicable electrical service is illustrated below. Refer to the customer connection diagram that is shipped with the unit for specific termination points. The termination points, depending on the customer option selected would be a factory mounted non-fused disconnect switch (UDC) or circuit breaker (UCB). If neither a factory mounted non-fused disconnect switch (UDC) or circuit breaker (UCB) was factory mounted, field wiring connections should be terminated in the control box at Compressor Contactor # 1 (CC1).
2. Provide proper grounding for the unit in accordance with local and national codes.

Notes:

- *Black Gasket is shipped from the factory and is located in the literature ship with bag in the control box. Apply Black Gasket around conduit plate on all 4 sides after installation to prevent air leakage from the building entering the electrical enclosures.*
- *Seal between wiring and conduit with Black Gasket or weather proof sealer to prevent air leakage from the building entering the electrical enclosures. Also seal around conduit and wiring at all roof and curb penetrations.*

Figure 51. All units except W/DHC120H

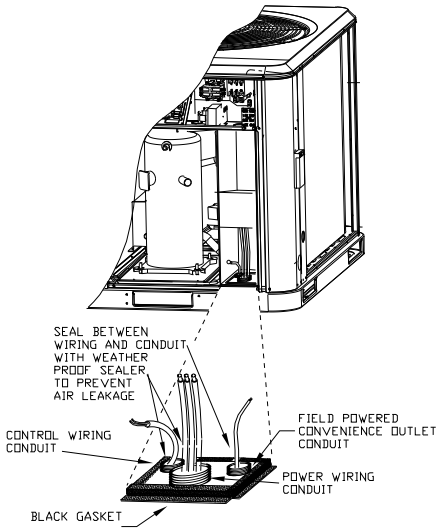

Figure 52. W/DHC120H

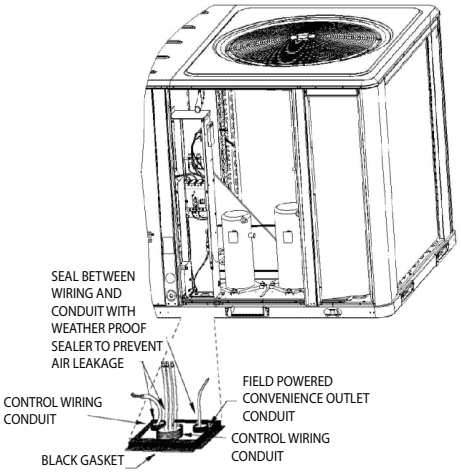

Field Installed Control Wiring

⚠WARNING

Proper Field Wiring and Grounding Required!

Failure to follow code could result in death or serious injury. All field wiring MUST be performed by qualified personnel. Improperly installed and grounded field wiring poses FIRE and ELECTROCUTION hazards. To avoid these hazards, you MUST follow requirements for field wiring installation and grounding as described in NEC and your local/state/national electrical codes.

⚠WARNING

Hazardous Voltage!

Failure to disconnect power before servicing could result in death or serious injury.
Disconnect all electric power, including remote disconnects before servicing. Follow proper lockout/tagout procedures to ensure the power can not be inadvertently energized. Verify that no power is present with a voltmeter.

An overall layout of the various control options available with the required number of conductors for each control device is illustrated in Figure 58, p. 35.

Note: *All field wiring must conform to NEC guidelines as well as state and local codes.*

Control Power Transformer

The 24 volt control power transformers are to be used only with the accessories called out in this manual. Transformers rated greater than 50 VA are equipped with internal circuit breakers. If a circuit breaker trips, turn “Off” all power to the unit before attempting to reset it.

⚠WARNING

Hazardous Voltage!

Failure to disconnect power before servicing could result in death or serious injury.
Disconnect all electric power, including remote disconnects before servicing. Follow proper lockout/tagout procedures to ensure the power can not be inadvertently energized. Verify that no power is present with a voltmeter.

The transformer is located in the control panel. The circuit breaker is located on the left side of the transformer and can be reset by pressing in on the black reset button.

Controls Using 24 Vac

Before installing any connecting wiring, refer to the Dimensions and Weights chapter for the electrical access locations provided on the unit and the following AC conductor table for AC conductor sizing guidelines, and;

1. Use copper conductors unless otherwise specified.
2. Ensure that the AC control wiring between the controls and the unit’s termination point does not exceed three (3) ohms/conductor for the length of the run.

NOTICE

Controls Using 24 VAC!

Resistance in excess of 3 ohms per conductor could cause component failure due to insufficient AC voltage supply.

Note: *Be sure to check all loads and conductors for grounds, shorts, and mis-wiring.*

3. Do not run the AC low voltage wiring in the same conduit with the high voltage power wiring.
4. Route low voltage wiring per the following Customer control low voltage routing drawing.

Table 4. AC conductors

Distance from Unit to Control	Recommended Wire Size
000 - 460 feet 000 - 140 m	18 gauge 0.75 mm^2
461 - 732 feet 141 - 223 m	16 gauge 1.3 mm^2
733 - 1000 feet 224 - 305 m	14 gauge 2.0 mm^2

Controls Using DC Analog Input/Outputs (Standard Low Voltage Multiconductor Wire)

Before installing any connecting wiring between the unit and components utilizing a DC analog input/output signal, refer to the Dimensional information in the Dimension and Weights chapter for the electrical access locations provided on the unit.

1. The zone sensor module wiring table lists the conductor sizing guidelines that must be followed when interconnecting the DC binary output devices and the system components utilizing a DC analog input/output signal to the unit.

Note: *Resistance in excess of 2.5 ohms per conductor can cause deviations in the accuracy of the controls.*

2. Ensure that the wiring between controls and the unit's termination point does not exceed two and a half (2.5) ohms/conductor for the length of the run.
3. Do not run the electrical wires transporting DC signals in or around conduit housing high voltage wires.
4. Route low voltage wiring per Figure 55, p. 33.

Table 5. Zone sensor module wiring

Distance from Unit to Control	Recommended Wire Size
0 - 150 feet 0 - 45.7 m	22 gauge 0.33 mm^2
151 - 240 feet 46 - 73.1 m	20 gauge 0.50 mm^2
241 -385 feet 73.5 - 117.3 m	18 gauge 0.75 mm^2
386 - 610 feet 117.7 - 185.9 m	16 gauge 1.3 mm^2
611 - 970 feet 186.2 - 295.7 m	14 gauge 2.0 mm^2

Figure 53. ReliaTel™ conventional thermostat field wiring diagram

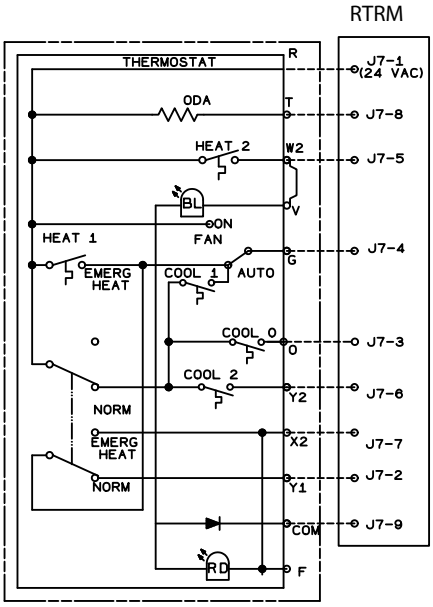

Figure 54. ReliaTel™ refrigeration module

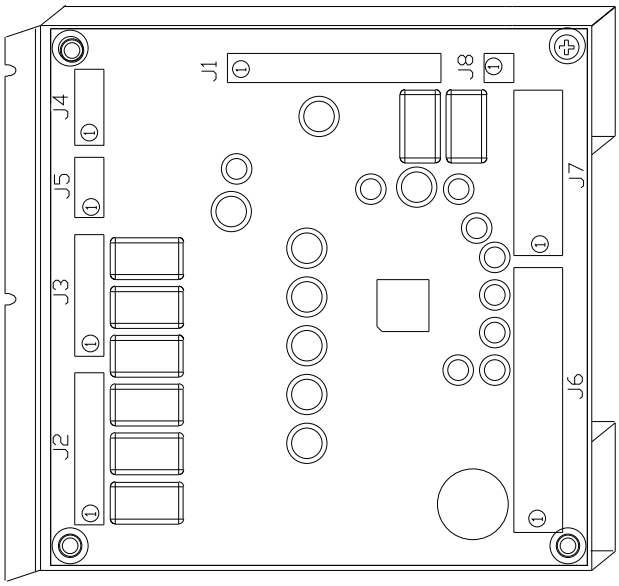

Figure 55. Customer control low voltage routing (all units except W/DHC120H)

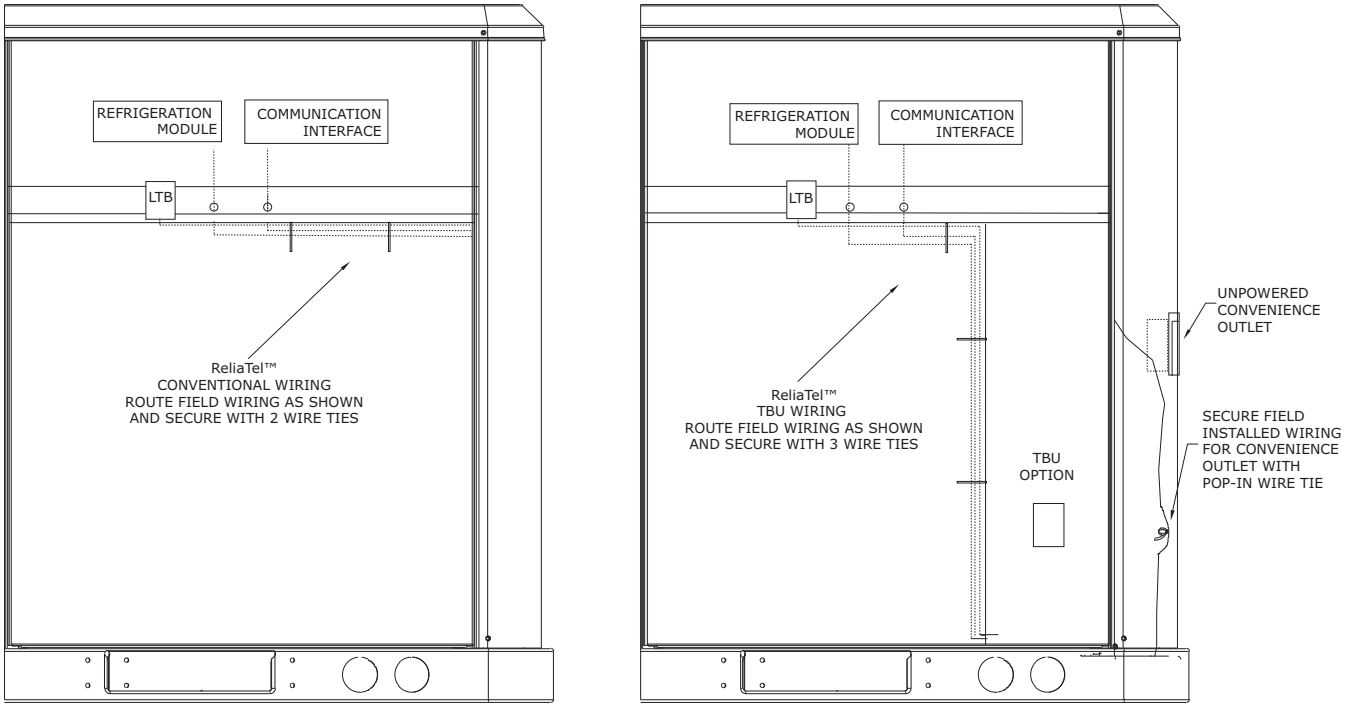

Figure 56. ReliaTel™ (without TBUE) control customer wire routing (W/DHC120H)

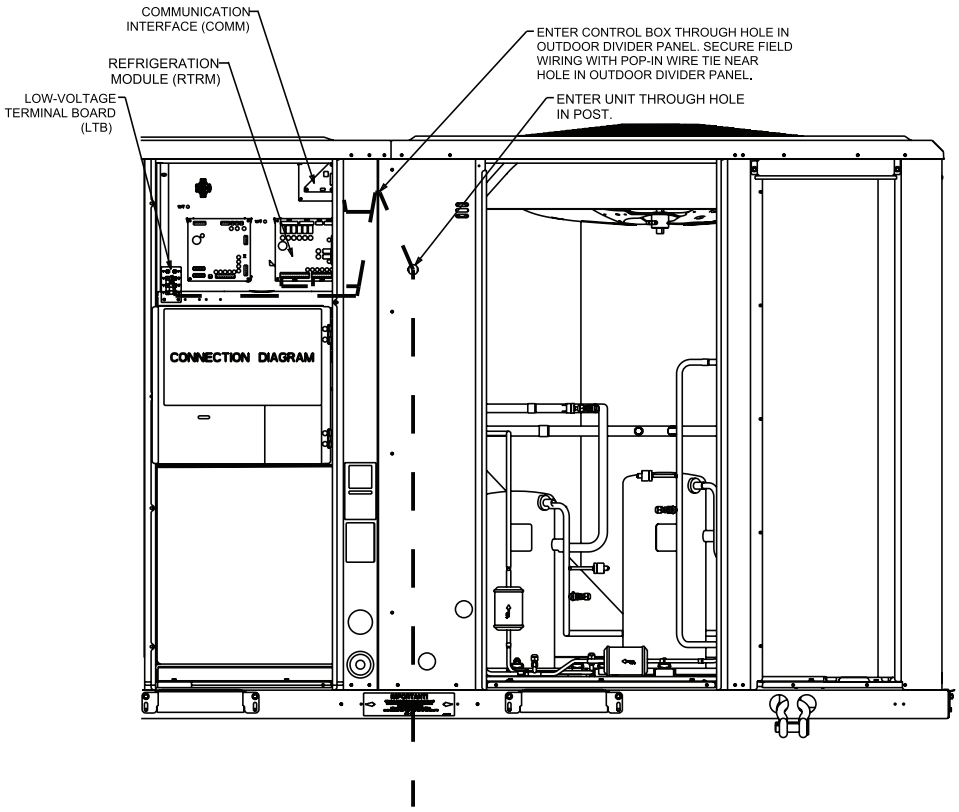

Figure 57. ReliaTel™ (with TBUE) control customer wire routing (W/DHC120H)

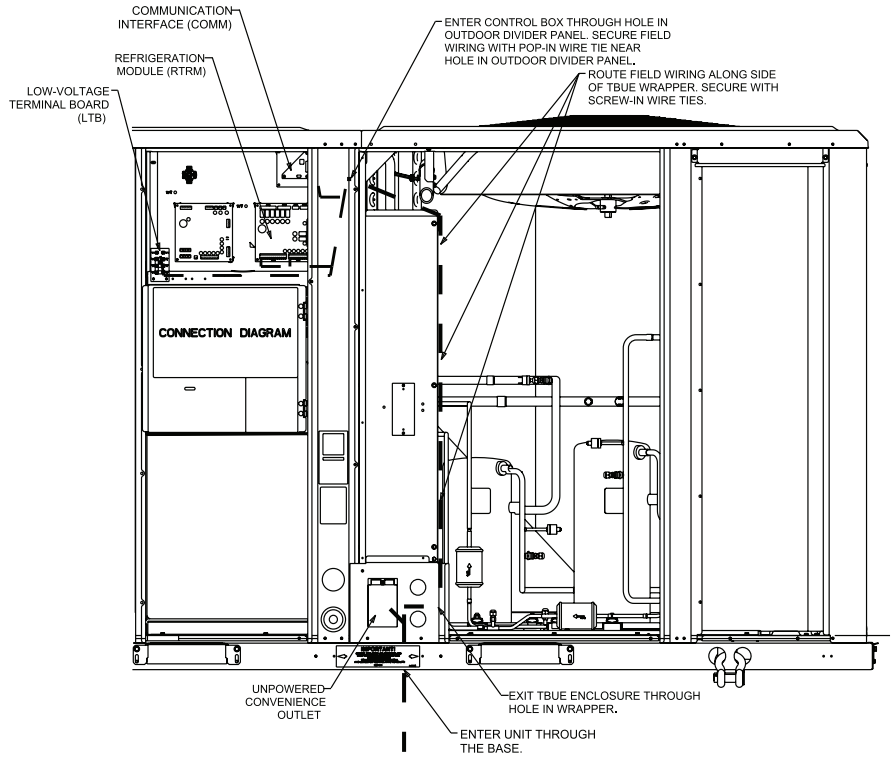

Space Temperature Averaging (ReliaTel™ only)

Space temperature averaging is accomplished by wiring a number of remote sensors in a series/parallel circuit.

Using the BAYSENS016* or BAYSENS077*, at least four sensors are required to accomplish space temperature averaging. Example #1 illustrates two series circuits with two sensors in each circuit wired in parallel. The square of any number of remote sensors is required. Example #2 illustrates three sensors squared in a series/parallel circuit. Using BAYSENS077*, two sensors are required to accomplish space temperature averaging. Example #3 illustrates the circuit required for this sensor. The following table lists the temperature versus resistance coefficient for all sensors.

Figure 58. Examples

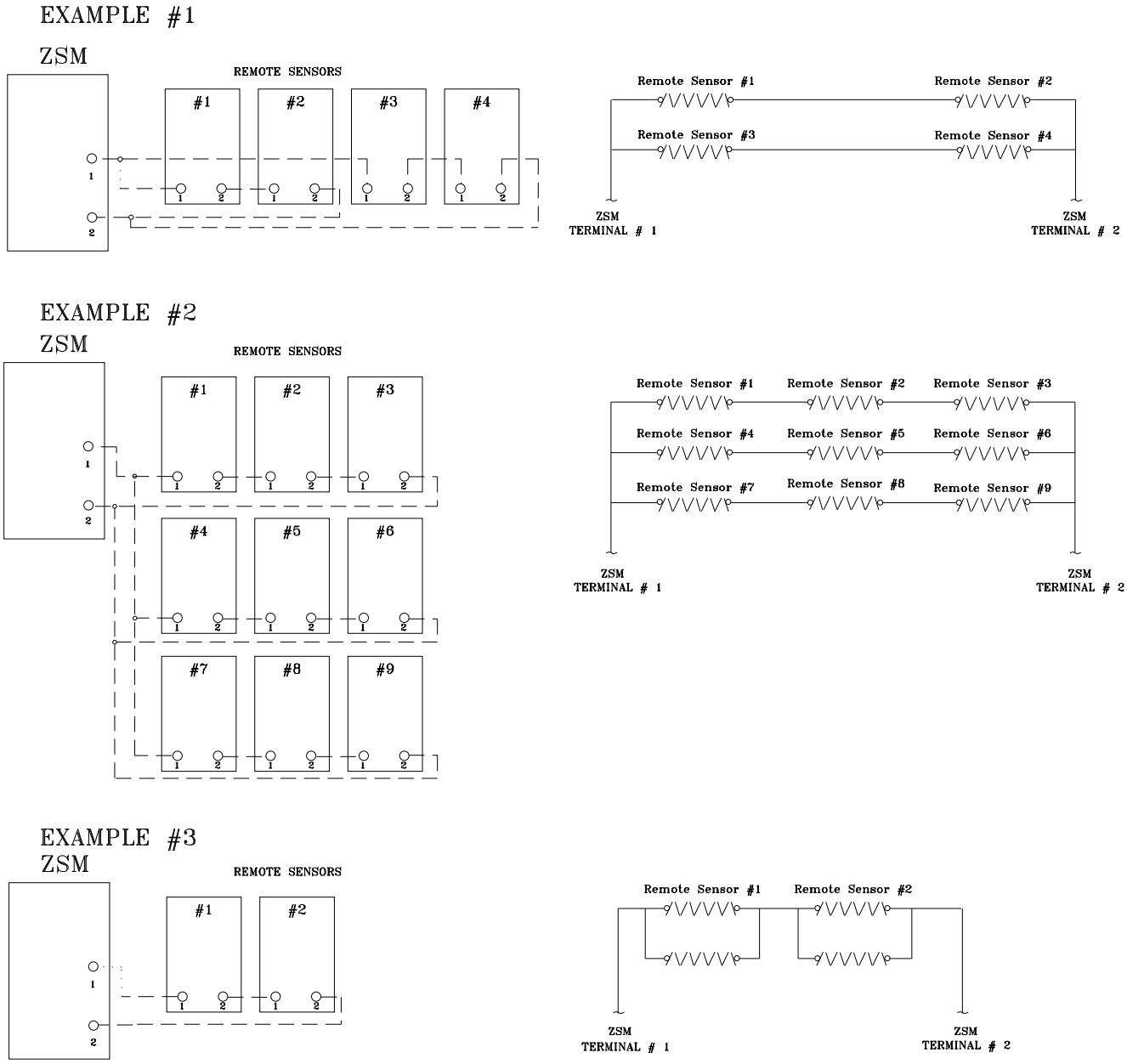

Note: *Wiring pin numbers are for reference only. There are multiple smoke detector systems that could have differently numbered pins. For correct wiring details, please refer to the specific smoke detector literature that accompanied this unit.*

Figure 59. Typical field wiring diagrams for optional controls

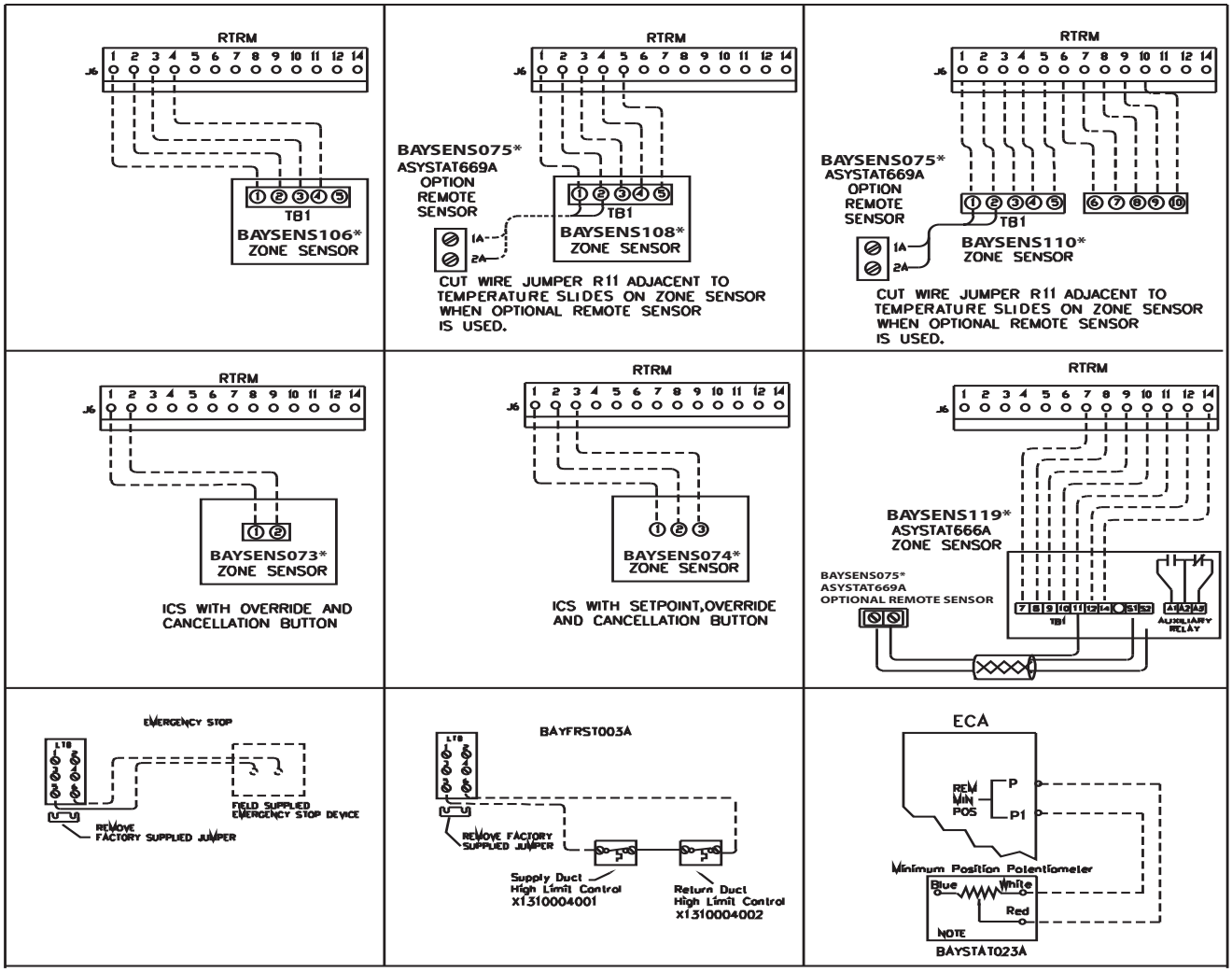

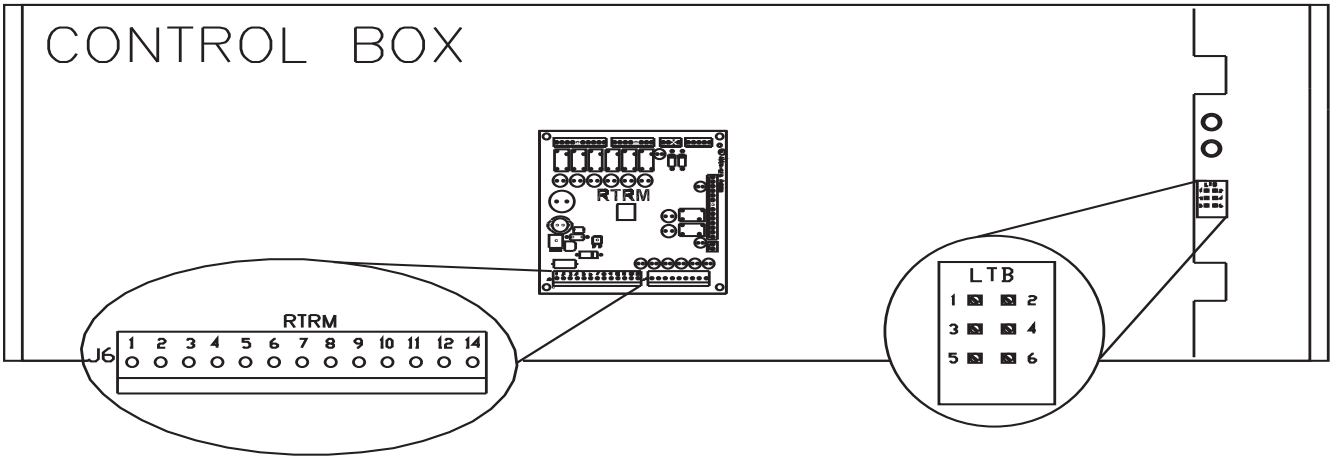

Table 6. Temperature versus resistance (temperature vs. resistance is negative)

Temperature		
Degrees F°	**Degrees C°**	**Nominal Resistance**
-20°	-28.9°	170.1 K - Ohms
-15°	-26.1°	143.5 K - Ohms
-10°	-23.3°	121.4 K - Ohms
-5°	-20.6°	103.0 K - Ohms
0°	-17.8°	87.56 K - Ohms
5°	-15.0°	74.65 K - Ohms
10°	-12.2°	63.80 K - Ohms
15°	-9.4°	54.66 K - Ohms
20°	-6.7°	46.94 K - Ohms
25°	-3.8°	40.40 K - Ohms
30°	-1.1°	34.85 K - Ohms
35°	1.7°	30.18 K - Ohms
40°	4.4°	26.22 K - Ohms
45°	7.2°	22.85 K - Ohms
50°	10.0°	19.96 K - Ohms
55°	12.8°	17.47 K - Ohms
60°	15.6°	15.33 K - Ohms
65°	18.3°	13.49 K - Ohms
70°	21.1°	11.89 K - Ohms
75°	23.9°	10.50 K - Ohms
80°	26.7°	9.297 K - Ohms
85°	29.4°	8.247 K - Ohms
90°	32.2°	7.330 K - Ohms
95°	35.0°	6.528 K - Ohms
100°	37.8°	5.824 K - Ohms

Table 7. Sizing natural gas pipe mains and branches

Iron Pipe Size (IPS) Inches					
Length of Pipe (Ft.)	**½-in. Pipe**	**¾-in. Pipe**	**1-in. Pipe**	**1¼-in. Pipe**	**1½-in. Pipe**
15	76	176	345	750	1220
30	52	120	241	535	850
45	43	99	199	435	700
60	38	86	173	380	610
75		77	155	345	545

Note: Capacity of Pipe of Different Diameters and Lengths in Cu. Ft. Per Hr. with Pressure Drop of 0.3-in. and Specific Gravity of 0.60.

Table 8. Iron pipe size (SI) millimeters

Iron Pipe Size (SI) Millimeters					
Length of Pipe (Meters)	**15 mm Pipe**	**20 mm Pipe**	**25 mm Pipe**	**32 mm Pipe**	**40 mm Pipe**
4.6	2.15	4.98	9.76	21.23	34.54
9.1	1.47	3.39	6.82	15.14	24.06
13.7	1.21	2.80	5.63	12.31	19.82
18.3	1.07	2.43	4.89	10.76	17.27
22.9	—	2.18	4.38	9.76	15.40

Note: Capacity of Pipe of Different Diameters and Lengths in Cu. Meter Per Hr. with Pressure Drop of 74.6 Pa and Specific Gravity of 0.60.

Figure 60. Schematic diagram for field gas piping to unit

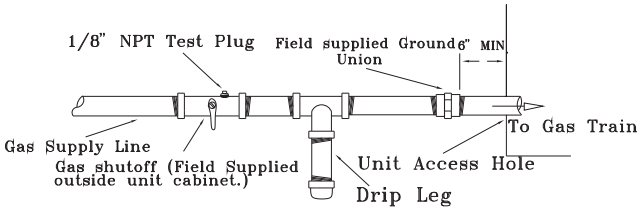

Pre-Start

Use the checklist provided below in conjunction with the "General Unit Requirements" checklist to ensure that the unit is properly installed and ready for operation.

⚠WARNING

Hazardous Voltage w/Capacitors!

Failure to disconnect power and discharge capacitors before servicing could result in death or serious injury. Disconnect all electric power, including remote disconnects and discharge all motor start/run capacitors before servicing. Follow proper lockout/tagout procedures to ensure the power cannot be inadvertently energized. Verify with a CAT III or IV voltmeter rated per NFPA 70E that all capacitors have discharged.

- Check all electrical connections for tightness and "point of termination" accuracy.
- Verify that the condenser airflow will be unobstructed.
- Verify that the condenser fan and indoor blower turn freely without rubbing and are properly tightened on the shafts.
- Check the supply fan belts for proper tension and the fan bearings for sufficient lubrication. If the belts require adjustment, or if the bearings need lubricating, refer to the maintenance section of this manual for instructions.
- Verify that a condensate trap is installed and the piping is properly sized and pitched.
- Verify that the correct size and number of filters are in place.
- Inspect the interior of the unit for tools and debris and install all panels in preparation for starting the unit.

Voltage Imbalance

Three phase electrical power to the unit must meet stringent requirements for the unit to operate properly. Measure each leg (phase-to-phase) of the power supply. Each reading must fall within the utilization range stamped on the unit nameplate. If any of the readings do not fall within the proper tolerances, notify the power company to correct this situation before operating the unit.

Excessive three phase voltage imbalance between phases will cause motors to overheat and eventually fail. The maximum allowable voltage imbalance is 2%. Measure and record the voltage between phases 1, 2, and 3 and calculate the amount of imbalance as follows:

$$\text{\% Voltage Imbalance} = \frac{100 \text{ X AV - VD}}{\text{AV}} \quad \text{where;}$$

$$\text{AV (Average Voltage)} = \frac{\text{Volt 1 + Volt 2 + Volt 3}}{3}$$

V1, V2, V3 = Line Voltage Readings

VD = Line Voltage reading that deviates the farthest from the average voltage.

Example: If the voltage readings of the supply power measured 221, 230, and 227, the average volts would be:

$$\frac{221 + 230 + 227}{3} = 226 \text{ Avg.}$$

VD (reading farthest from average) = 221

The percentage of Imbalance equals:

$$\frac{100 \text{ X } 226 - 221}{226} = 2.2\%$$

The 2.2% imbalance in this example exceeds the maximum allowable imbalance of 2.0%. This much imbalance between phases can equal as much as a 20% current imbalance with a resulting increase in motor winding temperatures that will decrease motor life. If the voltage imbalance is over 2%, notify the proper agencies to correct the voltage problem before operating this equipment.

Electrical Phasing (Three Phase Motors)

The compressor motor(s) and the supply fan motor are internally connected for the proper rotation when the incoming power supply is phased as A, B, C.

Proper electrical supply phasing can be quickly determined and corrected before starting the unit by using an instrument such as an Associated Research Model 45 Phase Sequence Indicator and following the steps below.

⚠WARNING

Hazardous Voltage w/Capacitors!

Failure to disconnect power and discharge capacitors before servicing could result in death or serious injury. Disconnect all electric power, including remote disconnects and discharge all motor start/run capacitors before servicing. Follow proper lockout/tagout procedures to ensure the power cannot be inadvertently energized. Verify with a CAT III or IV voltmeter rated per NFPA 70E that all capacitors have discharged.

- Turn the field supplied disconnect switch that provides power to the main power terminal block or to the “Line” side of the optional factory mounted disconnect switch to the “Off” position.
- Connect the phase sequence indicator leads to the terminal block or to the “Line” side of the optional factory mounted disconnect switch as follows;

  Black (phase A) to L1.

  Red (phase B) to L2.

  Yellow (phase C) to L3.
- Close the field supplied main power disconnect switch or circuit protector switch that provides the supply power to the unit.

⚠WARNING

Live Electrical Components!

Failure to follow all electrical safety precautions when exposed to live electrical components could result in death or serious injury.
When it is necessary to work with live electrical components, have a qualified licensed electrician or other individual who has been properly trained in handling live electrical components perform these tasks.

- Observe the ABC and CBA phase indicator lights on the face of the sequencer. The ABC indicator light will glow if the phase is ABC. If the CBA indicator light glows, open the disconnect switch or circuit protection switch and reverse any two power wires.
- Restore the main electrical power and recheck the phasing. If the phasing is correct, open the disconnect switch or circuit protection switch and remove the phase sequence indicator.

Compressor Crankcase Heaters

Each compressor is equipped with a crankcase heater. The proper operation of the crankcase heater is important to maintain an elevated compressor oil temperature during the “Off” cycle to reduce oil foaming during compressor starts. Oil foaming occurs when refrigerant condenses in the compressor and mixes with the oil. In lower ambient conditions, refrigerant migration to the compressor could increase.

When the compressor starts, the sudden reduction in crankcase pressure causes the liquid refrigerant to boil rapidly causing the oil to foam. This condition could damage compressor bearings due to reduced lubrication and could cause compressor mechanical failures.

Before starting the unit in the “Cooling” mode, set the system switch to the “Off” position and turn the main power disconnect to the “On” position and allow the crankcase heater to operate a minimum of 8 hours.

Before closing the main power disconnect switch, insure that the “System” selection switch is in the “Off” position and the “Fan” selection switch is in the “Auto” position.

Close the main power disconnect switch and the unit mounted disconnect switch, if applicable.

ReliaTel™ Controls

Upon power initialization, the RTRM performs self-diagnostic checks to insure that all internal controls are functional. It also checks the configuration parameters against the components connected to the system. The Liteport LED located on the RTRM module is turned “On” within one second of power-up if internal operation is okay.

Use one of the following “Test” procedure to bypass some time delays and to start the unit at the control panel. Each step of unit operation can be activated individually by temporarily shorting across the “Test” terminals for two to three seconds. The Liteport LED located on the RTRM module will blink when the test mode has been initiated. The unit can be left in any “Test” step for up to one hour before it will automatically terminate, or it can be terminated by opening the main power disconnect switch. Once the test mode has been terminated, the Liteport LED will glow continuously and the unit will revert to the “System” control.

Table 9. Service test guide for component operation

Test Step	Mode	Fan	Econ[a]	Comp1	Comp 2	Heat 1	Heat 2	Ohms	Multi-Speed Fan Output
1	Fan	On	Minimum Position Setpoint 0%	Off	Off	Off	Off	2.2K	Low
	Minimum Ventilation	On	Selectable	Off	Off	Off	Off		
2	Economizer Test Open	On	Open	Off	Off	Off	Off	3.3K	Low
3	Cool Stage 1	On	Minimum Position	On[b]	Off	Off	Off	4.7K	Low
4[c]	Cool Stage 2	On	Minimum Position	On[b]	On	Off	Off	6.8K	High (2-step cooling) Low (2-step cooling)
5[c]	Reheat	On	Minimum	On	On	Off	Off	33K	High
6[c]	Heat Stage 1	On	Minimum	Off	Off	On	Off	10K	High
7[c]	Heat Stage 2	On	Minimum	Off	Off	On	On	15K	High

(a) The exhaust fan will turn on anytime the economizer damper position is equal to or greater than the exhaust fan setpoint.
(b) The condenser fans will operate any time a compressor is “On” providing the outdoor air temperatures are within the operating values.
(c) Steps for optional accessories and non-applicable modes in unit will be skipped.

Test Modes

There are three methods in which the “Test” mode can be cycled at LTB-Test 1 and LTB-Test 2.

- Step Test Mode - This method initiates the different components of the unit, one at a time, by temporarily shorting across the two test terminals for two to three seconds.

  For the initial start-up of the unit, this method allows the technician to cycle a component “On” and have up to one hour to complete the check.
- Resistance Test Mode - This method can be used for start-up providing a decade box for variable resistance outputs is available. This method initiates the different components of the unit, one at a time, when a specific resistance value is placed across the two test terminals. The unit will remain in the specific test mode for approximately one hour even though the resistance is left on the test terminals.
- Auto Test Mode - This method is not recommended for start-up due to the short timing between individual component steps. This method initiates the different components of the unit, one at a time, when a jumper is installed across the test terminals. The unit will start the first test step and change to the next step every 30 seconds. At the end of the test mode, control of the unit will automatically revert to the applied “System” control method.

For unit test steps, test modes, and step resistance values to cycle the various components, refer to Table 9, p. 40.

Table 10. Heat pump with constant volume fan control

Test Step	Mode	C1	C2	CFA	CFB	Heat 1	Heat 2	SOV1	Econ[a]	S Fan	CV Fan Speed Command
1	Fan On	Off	Off	Off	Off	Off	Off	Off	Min.	On	Min Speed
2	Econ	Off	Off	Off	Off	Off	Off	On	100%	On	Min Speed
3	Cool 1	On	Off	Norm[b]	Norm[b]	Off	Off	On	Min.	On	57% or 70%[c]
4	Cool 2	On	On	Norm[b]	Norm[b]	Off	Off	On	Min.	On	82% or 100%[c]
5	Heat 1	On	Off	Off	On	Off	Off	Off	Min.	On	100%
6	Heat 2	On	On	Off	On	Off	Off	Off	Min.	On	100%
7	Heat 3	On/Off[d]	On/Off[d]	Off	On/Off[d]	On	Off	Off	Min.	On	100%
8	Heat 4	On/Off[d]	On/Off[d]	Off	On/Off[d]	On	On	Off	Min.	On	100%
9	Defrost	On	On	Off	Off	On	Off	On	Min.	On	100%
10	Em Heat	Off	Off	Off	Off	On	On	Off	Min.	On	100%

(a) If installed.
(b) Normal condenser fan staging shall remain in effect during Service Test mode.
(c) Dependent on the short run timer.
(d) Dependent on auxiliary heat being electric heat (On) or gas heat (Off).

Table 11. Heat pump with single zone VAV fan control

Test Step	Mode	C1	C2	CFA	CFB	Heat 1	Heat 2	SOV1	Econ[a]	S Fan	CV Fan Speed Command
1	Fan On	Off	Off	Off	Off	Off	Off	Off	Min.	On	Min Speed
2	Econ	Off	Off	Off	Off	Off	Off	On	100%	On	Min Speed
3	Cool 1	On	Off	Norm[b]	Norm[b]	Off	Off	On	Min.	On	57% or 70%[c]
4	Cool 2	On	On	Norm[b]	Norm[b]	Off	Off	On	Min.	On	82% or 100%[c]
5	Heat 1	On	Off	Off	On	Off	Off	Off	Min.	On	100%
6	Heat 2	On	On	Off	On	Off	Off	Off	Min.	On	100%
7	Heat 3	On/Off[d]	On/Off[d]	Off	On/Off[d]	On	Off	Off	Min.	On	100%
8	Heat 4	On/Off[d]	On/Off[d]	Off	On/Off[d]	On	On	Off	Min.	On	100%
9	Defrost	On	On	Off	Off	On	Off	On	Min.	On	100%
10	Em Heat	Off	Off	Off	Off	On	On	Off	Min.	On	100%

(a) If installed.
(b) Normal condenser fan staging shall remain in effect during Service Test mode.
(c) Dependent on the short run time.
(d) Dependent on auxiliary heat being electric heat (On) or gas heat (Off).

Table 12. Heat pump with multi-zone VAV fan control

Test Step	Mode	C1	C2	CFA	CFB	Heat 1	Heat 2	SOV1	Econ[a]	S Fan	CV Fan Speed Command
1	IGV/VFD Open	Off	Off	Off	Off	Off	Off	Off	Closed	Off	Min Speed
2	IGV/VFD Closed	Off	Off	Off	Off	Off	Off	Off	Closed	Off	Min Speed
3	Fan On / Min Vent	Off	Off	Off	Off	Off	Off	Off	Min.	On	Min Speed
4	Econ	Off	Off	Off	Off	Off	Off	On	100%	On	In Control[b]
5	Cool 1	On	Off	Norm[c]	Norm[c]	Off	Off	On	Min.	On	In Control[b]
6	Cool 2	On	On	Norm[c]	Norm[c]	Off	Off	On	Min.	On	In Control[b]
7	Heat 1	On	Off	Off	On	Off	Off	Off	Min.	On	100%
8	Heat 2	On	On	Off	On	Off	Off	Off	Min.	On	100%
9	Heat 3	On/Off[d]	On/Off [d]	Off	On/Off[d]	On	Off	Off	Min.	On	100%
10	Heat 4	On/Off[d]	On/Off[d]	Off	On/Off[d]	On	On	Off	Min.	On	100%
11	Defrost	On	On	Off	Off	On	Off	On	Min.	On	100%
12	Em Heat	Off	Off	Off	Off	On	On	Off	Min.	On	100%

(a) If installed.
(b) Supply Fan Speed controlled to duct static pressure.
(c) Normal condenser fan staging shall remain in effect during Service Test mode.
(d) Dependent on auxiliary heat being electric heat (On) or gas heat (Off).

Unit Start-Up

Sequence of Operation

Units are offered with two control options, electromechanical or ReliaTel™.

Notes:

- *Refer to the unit nameplate: If the 9th digit of the model number = R, proceed with the ReliaTel™ Controls section within this chapter. If the 9th digit of the model number = E, proceed with the Electromechanical Controls section within this chapter.*
- *The optional condensate overflow switch (COF) will shut the unit down if the float is raised and the switch is closed.*

ReliaTel™ Controls

ReliaTel™ Controls - Constant Volume (CV)

ReliaTel™ control is a microelectronic control feature, which provides operating functions that are significantly different than conventional electromechanical units. The primary module is the ReliaTel™ refrigeration module (RTRM).

The RTRM provides compressor anti-short cycle timing functions through minimum “Off” and “On” timing to increase reliability, performance and to maximize unit efficiency.

Upon power initialization, the RTRM performs self-diagnostic checks to insure that all internal controls are functioning. It checks the configuration parameters against the components connected to the system.

The LED located on the RTRM module is turned “On” within one second after power-up if all internal operations are okay.

ReliaTel™ Control Cooling without an Economizer

When the system switch is set to the “Cool” position and the zone temperature rises above the cooling setpoint control band, the RTRM energizes the (K9) relay coil located on the RTRM. When the K9 relay contacts close, the compressor contactor (CC1) coil is energized provided the low pressure control (LPC1), high pressure control (HPC1) and discharge line thermostat (TDL 1) are closed. When the CC1 contacts close, compressor (CPR1) and the outdoor fan motor (ODM) start to maintain the zone temperature to within ± 2ºF of the sensor setpoint at the sensed location.

If the first stage of cooling can not satisfy the cooling requirement, the RTRM energizes the (K10) relay coil located on the RTRM. When the (K10) relay contacts close, the compressor contactor (CC2) coil is energized provided the low pressure control (LPC2), high pressure control (HPC2) and discharge line thermostat (TDL 2) are closed. When the CC2 contacts close, compressor (CPR2) starts to maintain the zone temperature to within ± 2ºF of the sensor setpoint at the sensed location.

Three-Stages of Cooling

Note: *6 to 10T high efficiency units only.*

When the unit is configured for three-stage cooling, and the system switch is set to the cool position and the zone temperature rises above the cooling setpoint control band, the RTRM energizes the (K10) relay coil located on the RTRM. When the (K10) relay contacts close, compressor contactor (CC2) is energized. This is the smaller of the two compressors (CPR2). This staging order is opposite standard staging order.

If the first stage of cooling can not satisfy the cooling requirement, the RTRM energizes the (K9) relay coil and de-energizes the (K10) relay coil on the RTRM. Compressor contactor (CC1) is energized, bringing on the larger of the two compressors (CPR1). Compressor contactor (CC2) is de-energized, turning off the smaller compressor.

If the second stage of cooling can not satisfy the cooling requirement, the RTRM keeps the (K9) relay coil energized and energizes the (K10) relay coil. Compressor contactors (CC1) and (CC2) are energized, and both compressors (CPR1 and CPR2).

Lead/Lag is disabled with three-stage cooling. A unit configured for three-stage cooling and controlled with a thermostat will operate as a two-stage unit.

ReliaTel™ Control Evaporator Fan Operation (for Gas Units)

When the fan selection switch is set to the “Auto” position, the RTRM energizes the (K6) relay coil approximately 1 second after energizing the compressor contactor coil (CC1) in the cooling mode. In the heating mode, the RTRM energizes the (K6) relay coil approximately 45 second after gas ignition. Closing the (K6) contacts on the RTRM energizes the indoor fan relay (F) coil to start the indoor fan motor (IDM).

The RTRM de-energizes the fan relay (F) approximately 60 seconds after the cooling requirement has be satisfied to enhance unit efficiency. When the heating cycle is terminated, the indoor fan relay (F) coil is de-energized approximately 90 seconds after the heating requirement.

When the fan selection switch is set to the “On” position, the RTRM keeps the indoor fan relay coil (F) energized for continuous fan motor operation.

When the unit is equipped with the optional clogged filter switch, wired between terminals J7-3 and J7-4 on the ReliaTel™ options module (RTOM), the RTRM produces an analog output if the clogged filter switch (CFS) closes for two minutes after a request for fan operation. When the system is connected to a remote panel, the “SERVICE” LED will be turned on when this failure occurs.

ReliaTel™ Control Evaporator Fan Operation (for Cooling Only Units)

When the fan selection switch is set to the “Auto” position, the RTRM energizes the (K6) relay coil approximately 1 second after energizing the compressor contactor coil (CC1) in the cooling mode. In the heating mode, the RTRM energizes the (K6) relay coil approximately 1 second before energizing the electric heat contactors. Closing the (K6) contacts on the RTRM energizes the indoor fan relay (F) coil to start the indoor fan motor (IDM). The RTRM de-energizes the fan relay (F) approximately 60 seconds after the cooling requirement has be satisfied to enhance unit efficiency.

When the heating cycle is terminated, the indoor fan relay (F) coil is de-energized at the same time as the heater contactors.

When the fan selection switch is set to the “On” position, the RTRM keeps the indoor fan relay coil (F) energized for continuous fan motor operation.

When the unit is equipped with the optional clogged filter switch, wired between terminals J7-3and J7-4 on the ReliaTel™ options module (RTOM), the RTRM produces an analog output if the clogged filter switch (CFS) closes for two minutes after a request for fan operation.

When the system is connected to a remote panel, the “SERVICE” LED will be turned on when this failure occurs.

Low Ambient Operation

Note: *For ReliaTel™ units only*

During low ambient operation, outside air temperature below 55°F, the RTRM will cycle the compressor and outdoor fan motor “Off” for approximately 3 minutes after every 10 minutes of accumulated compressor run time. The indoor fan motor (IDM) will continue to operate during this evaporator defrost cycle (EDC) and the compressor and outdoor fan will return to normal operation once the defrost cycle has terminated and the compressor “Off” time delay has been satisfied.

Note: *Units with the dehumidification option - When in dehumidification mode, the unit will not cycle as described above. The unit will run continuously in dehumidification mode at all ambient conditions above 40ºF. Dehumidification is disabled at ambient conditions below 40ºF.*

Multi-Speed Indoor Motor

Notes:

- *Multi-speed indoor fan available only on 6, 7.5 (dual compressor) and 8.5 tons high efficiency, and 10 tons products with ReliaTel™ controls.*
- *Multi-speed indoor fan standard for 17 Plus.*

Models configured for the multi-speed indoor motor will be controlled via the 0 to 10 Vdc or PWC indoor fan speed output located on the RTOM. R136 (DA COOL_FAN SPD) potentiometer on the RTOM sets the maximum motor speed. Note that the potentiometer voltage readings can be verified via 2-position harness connector located adjacent to the RTOM. The unit schematic will illustrate the exact location. Use a DC voltmeter to read the voltage between the two terminals. Provisions have been made in Service TEST Mode to allow for maximum motor speed adjustment. Motor may be adjusted using modes listed below. Reference the RPM table in the Performance Data section for fan speed.

1. TEST Mode Cool 2; 2-Step Cool applications only.
2. TEST Mode Cool 3; 3-Step Cool applications only.

Adjust R136 potentiometer clockwise to increase or counterclockwise to decrease motor speed.

Refer to the Fan Output% list below for supply fan output associated with each unit function:

Fan Output%

- Ventilation Only 50%.
- Economizer Cooling 65%.
- Cool 1 (C1 Energized) 65%.
- Cool 2 (C1 + C2) 100% (2-Steps of Cooling).
- Cool 2 (C1 or C2) 65% (3-Steps of Cooling).
- Cool 3 (C1 + C2 Energized) 100%.
- Dehumidification Fan Speeds and Enhanced 53%.
- Heat 100%.

Multi-Zone VAV Sequence of Operation

Supply Air Pressure Control

ReliaTel™ Option Module Control (RTOM)

Supply fan is driven by a pulse-width modulation (PWM) signal from the RTOM.

Note: *PWM = 3 to 5 tons.*

A pressure transducer measures duct static pressure, and the supply fan is modulated to maintain the supply air static pressure within an adjustable user-defined range. The range is determined by the supply air pressure setpoint and supply air pressure deadband, which are set through a unit mounted potentiometer or remote panel. The RTOM provides supply fan motor speed modulation.

The supply fan will accelerate or decelerate as required to maintain the supply static pressure setpoint.

Supply Air Static Pressure Limit

The control of the supply fan and VAV boxes are coordinated, with respect to time, during unit start up and transition to/from Occupied/Unoccupied modes to prevent overpressurization of the supply air ductwork. However, if for any reason the supply air pressure exceeds the fixed supply air static pressure limit of 3.5-in. W.C., the supply fan is shut down and the VAV boxes are closed. The unit is then allowed to restart three times. If the overpressurization condition occurs on the fourth time, the unit is shut down and a manual reset diagnostic is set and displayed at any of the remote panels with LED status lights or communicated to the Integrated Comfort system.

Supply Air Temperature Controls

Cooling/Economizer

During occupied cooling mode of operation, the economizer (if available) and primary cooling are used to control the supply air temperature. The supply air temperature setpoint is user-defined at the unit mounted VAV Setpoint Potentiometer or at the remote panel. If the enthalpy of the outside air is appropriate to use “free cooling”, the economizer will be used first to attempt to satisfy the supply setpoint. On units with economizer, a call for cooling will modulate the fresh air dampers open. The rate of economizer modulation is based on deviation of the discharge temperature from setpoint, i.e., the further away from setpoint, the faster the fresh air damper will open. Note that the economizer is only allowed to function freely if ambient conditions are below the enthalpy control setting or below the return air enthalpy if unit has comparative enthalpy installed. If outside air is not suitable for “economizing”, the fresh air dampers drive to the minimum open position. A field adjustable potentiometer on the Economizer Actuator, or a remote potentiometer can provide the input to establish the minimum damper position. At outdoor air conditions above the enthalpy control setting, primary cooling only is used and the fresh air dampers remain at minimum position. If the unit does not include an economizer, primary cooling only is used to satisfy cooling requirements.

Supply Air Setpoint Reset

Supply air reset can be used to adjust the supply air temperature setpoint on the basis of a zone temperature, return air temperature, or on outdoor air temperature. Supply air reset adjustment is available on the unit mounted VAV setpoint potentiometer for supply air cooling control.

Reset Based on Outdoor Air Temperature

Outdoor air cooling reset is sometimes used in applications where the outdoor temperature has a large effect on building load. When the outside air temperature is low and the building cooling load is low, the supply air setpoint can be raised, thereby preventing subcooling of critical zones. This reset can lower usage of primary cooling and result in a reduction in primary cooling energy usage There are two user-defined parameters that are adjustable through the VAV Setpoint Potentiometer: reset temperature setpoint and reset amount. The amount of reset applied is dependent upon how far the outdoor air temperature is below the supply air reset setpoint. The amount is zero where they are equal and increases linearly toward the value set at the reset amount input. The maximum value is 20°F. If the outdoor air temperature is more than 20°F below the reset temperature setpoint the amount of reset is equal to the reset amount setpoint.

Reset Based on Zone or Return Temperature

Zone or return reset is applied to the zone(s) in a building that tends to overcool or overheat. The supply air temperature setpoint is adjusted based on the temperature of the critical zone(s) or the return air temperature. This can have the effect of improving comfort and/or lowering energy usage. The user-defined parameters are the same as for outdoor air reset. Logic for zone or return reset control is the same except that the origins of the temperature inputs are the zone sensor or return sensor respectively. The amount of reset applied is dependent upon how far the zone or return air temperature is below the supply air reset setpoint. The amount is zero where they are equal and increases linearly toward the value set at the reset amount potentiometer on the VAV setpoint potentiometer. The maximum value is 3°F. If the return or zone temperature is more than 3°F below the reset temperature setpoint the amount of reset is equal to the reset amount setpoint.

Zone Temperature Control

Unoccupied Zone Cooling

During unoccupied mode, the unit is operated as a CV unit. VAV boxes are driven full open and the supply fan is commanded to full speed. The unit controls zone temperature to the Unoccupied zone cooling setpoints.

Daytime Warm-up

During occupied mode, if the zone temperature falls to a temperature three degrees below the Morning Warm-up setpoint, Daytime Warm-up is initiated. The system changes to CV heating (full unit airflow), the VAV boxes are fully opened and the CV heating algorithm is in control until the Morning Warm-up setpoint is reached. The unit is then returned to VAV cooling mode. The Morning Warm-up setpoint is set at the unit mounted VAV Setpoint potentiometer or at a remote panel.

Morning Warm-up (MWU)

Morning warm-up control (MWU) is activated whenever the unit switches from unoccupied to occupied and the zone temperature is at least 1.5°F below the MWU setpoint. When MWU is activated the VAV box output will be energized for at least 6 minutes to drive all boxes open, the supply fan is commanded to full speed, and full heat (gas or electric) is energized. When MWU is activated the economizer damper is driven fully closed. When the zone temperature meets or exceeds the MWU setpoint minus 1.5°F, the heat will be turned or staged down. When the zone temperature meets or exceeds the MWU setpoint then MWU will be terminated and the unit will switch over to VAV cooling.

Variable Air Volume Applications (Single Zone VAV)

Supply Fan Output Control

Units configured for Single Zone VAV will be controlled via the 0-10 Vdc Indoor Fan Speed output located on the RTOM. R136 (DA COOL_FAN SPD) potentiometer on the RTOM sets the maximum motor speed. Note that the potentiometer voltage readings can be verified via 2-position harness connector located adjacent to the RTOM. The unit schematic will illustrate the exact location. Use a DC voltmeter to read the voltage between the two terminals. Reference the RPM table in the Performance Data section for fan speed.

- Use Service TEST Mode to adjust maximum motor speed using modes listed below.

1. TEST Mode Cool 2; 2-Step Cool applications only.
2. TEST Mode Cool 3; 3-Step Cool applications only.

- Adjust DA COOL_FAN SPD potentiometer clockwise to increase or counterclockwise to decrease motor speed.
- The control will scale the 0 to 10 Vdc output from the RTOM linearly to control between the 50% to 100% controllable range based on the space cooling demand.

Minimum Supply Fan Output

- Refer to the table below for details on minimum supply fan output signals associated with each unit function.
- Minimum Fan Output%.
- Ventilation Only 50%.
- Economizer Cooling 65%.
- Cool 1 (C1 Energized) 65%.
- Cool 2 (C1 + C2) 82% (2-Steps of Cooling).
- Cool 2 (C1 or C2) 65% (3-Steps of Cooling).
- Cool 3 (C1 + C2 Energized) 82%.
- Heat 100%.

Discharge Air Cool Setpoint Adjustment

- Single Zone VAV units will require traditional zone heating (if heat installed) and cooling setpoints that are used on single speed units in addition to a new setpoint: Discharge Air Cool Setpoint limit. Discharge Air Cool Setpoints will be customer selectable via a potentiometer (DACR) adjacent to the RTOM with a range of 40 to 70°F.
- The table below lists the discharge air cool setpoints on the DACR.

Note: *The recommended setting is 50°F.*

Table 13. Discharge air cool setpoints (DACR)

Setpoint (°F)	Voltage (Vdc)
40 - <0.1	55 - 1.65
41 - 0.2	56 - 1.7

Table 13. Discharge air cool setpoints (DACR) (continued)

Setpoint (°F)	Voltage (Vdc)
42 - 0.3	57 - 1.75
43 - 0.45	58 - 1.83
44 - 0.55	59 - 1.9
45 - 0.7	60 - 1.95
46 - 0.8	61 - 2
47 - 0.95	62 - 2.05
48 - 1.05	63 - 2.1
49 - 1.15	64 - 2.13
50 - 1.25	65 - 2.17
51 - 1.3	66 - 2.21
52 - 1.35	67 - 2.27
53 - 1.45	68 - 2.3
54 - 1.55	69 - 2.35
70 - >2.4	

ReliaTel™ Control Cooling with an Economizer

The economizer is utilized to control the zone temperature providing the outside air conditions are suitable. Outside air is drawn into the unit through modulating dampers. When cooling is required and economizing is possible, the RTRM sends the cooling request to the unit economizer actuator (ECA) to open the economizer damper. The RTRM tries to cool the zone utilizing the economizer to slightly below the zone temperature setpoint. If the mixed air sensor (MAS) senses that the mixed air temperature is below 53°F, the damper modulates toward the closed position. If the zone temperature continues to rise above the zone temperature setpoint controlband and the economizer damper is full open, the RTRM energizes the compressor contactor (CC1). If the zone temperature continues to rise above the zone temperature setpoint controlband and the economizer damper is fully open, the RTRM energizes the compressor contactor (CC2).

Multi-Speed Fan

When economizing alone or with 1st stage cooling the indoor motor will operate at low speed. If economizing and 2nd stage cooling requested, the indoor motor will transition from low to high speed.

Single Zone VAV

The indoor motor will vary the indoor motor speed to optimize minimum fan speed for the cooling demand in all modes (Economizer Only, Economizer +1st Stage Cooling, or Economizer + 1st/2nd Stage Cooling).

The ECA continues to modulate the economizer damper open/closed to keep the mixed air temperature that is calculated by the RTRM.

If economizing is not possible, the ECA drives the damper to the minimum position setpoint when the indoor fan relay (F) is energized and allows mechanical cooling operation.

When the unit is equipped with the optional fan failure switch, wired between terminals J7-5 and J7-6 on the RTOM, the RTRM will stop all cooling functions and produce an analog output if the fan failure switch (FFS) does not open within 40 seconds after a request for fan operation. When the system is connected to a remote panel, the “SERVICE” LED will flash when this failure occurs.

ReliaTel™ Control Dehumidification

Single Compressor Units

On a call for dehumidification, the reheat valve is energized and the compressor is turned on. When the humidity control setpoint is satisfied, the valve is de-energized and the compressor is turned off. If there is a call for cooling or heating from the space temperature controller, i.e. zone sensor or thermostat, while in reheat, the reheat valve is de-energized and the compressor continues to run, or the heat is turned on. The 3 minute compressor on and off times are still active during compressor operation.

Dual Compressor Units

The dehumidification cycle is only permitted above 40ºF and below 100°F and is not permitted during a heating cycle or during a demand for 2nd stage cooling. Otherwise, when an installed zone humidity sensor indicates a relative humidity equal to or greater than the RH set point as adjusted on the ReliaTel™ options module (RTOM), a dehumidification cycle is initiated. The sequence of operation for the dehumidification cycle is identical to that of the second stage ReliaTel™ cooling cycle, except that the hot gas reheat valve (RHV) is energized, allowing air from the evaporator to be reheated. Also, any installed fresh air damper is driven to minimum position.The dehumidification cycle is terminated by initiation of a heating cycle or a 2nd stage cooling cycle or when zone humidity is reduced to 5% below the R.H. set point. In the absence of a zone humidity sensor input, an on/off input from a zone humidistat is used to initiate/terminate the dehumidification cycle.

Dehumidification takes priority over a call for one-stage cooling.

Heating or two-stage cooling takes priority over dehumidification, and a relative humidity sensor takes priority over a humidistat.

Dehumidification Coil Purge Cycle

On multiple circuit units with dehumidification/reheat configured, a purge cycle will be active for compressor reliability. The purpose of this function is to properly distribute refrigerant and lubricant throughout the system by temporarily switching to the unused section of the coil for 3 minutes (purge cycle). The function operates as follows:

1. A purge cycle will be initiated after 90 minutes of accumulated compressor run time in only one mode: cooling or dehumidification, without transitioning to the other mode.
2. A purge cycle will consist of transitioning to the mode that hasn’t run in 90 minutes of total compressor operation. The cycle will last for a period of 3 minutes.
3. The 90-minute cycle count will be reset anytime there is a normal transition between cooling and dehumidification. Transitioning from one of these modes to any other mode (off or heat) will not reset the counter.
4. If the purge cycle is a cooling cycle, only the first circuit will be activated. If it is a dehumidification cycle then the normal 2-compressor dehumidification mode cycle will be used.
5. The purge cycle will ignore the low ambient dehumidification lockout feature.
6. A purge cycle takes priority over normal cooling or dehumidification requests, but will discontinue for all high priority lockouts and alarms.

ReliaTel™ Control Cooling with an Economizer

The economizer is utilized to control the zone temperature providing the outside air conditions are suitable. Outside air is drawn into the unit through modulating dampers. When cooling is required and economizing is possible, the RTRM sends the cooling request to the unit economizer actuator (ECA) to open the economizer damper. The RTRM tries to cool the zone utilizing the economizer to slightly below the zone temperature setpoint. If the mixed air sensor (MAS) senses that the mixed air temperature is below 53°F, the damper modulates toward the closed position. If the zone temperature continues to rise above the zone temperature setpoint control band and the economizer damper is full open for 5 minutes, the RTRM energizes the compressor contactor (CC1). If the zone temperature continues to rise above the zone temperature setpoint control band and the economizer damper is fully open, the RTRM energizes the compressor contactor (CC2).

The ECA continues to modulate the economizer damper open/closed to keep the mixed air temperature that is calculated by the RTRM.

If economizing is not possible, the ECA drives the damper to the minimum position setpoint when the indoor fan relay (F) is energized and allows mechanical cooling operation.

When the unit is equipped with the optional fan failure switch, wired between terminals J7-5 and J7-6 on the RTOM, the RTRM will stop all cooling functions and produce an analog output if the fan failure switch (FFS) does not open within 40 seconds after a request for fan operation. When the system is connected to a remote panel, the “SERVICE” LED will flash when this failure occurs.

Note: *For units equipped with the dehumidification option, if the unit is economizing, the damper resets to minimum position while in dehumidification mode.*

Economizer Set-Up

Adjusting the minimum position potentiometer located on the unit economizer actuator (ECA) sets the required amount of ventilation air.

Two of the three methods for determining the suitability of the outside air can be selected utilizing the enthalpy potentiometer on the ECA, as described below:

1. Ambient temperature - controlling the economizing cycle by sensing the outside air dry bulb temperature. The following table lists the selectable dry bulb values by potentiometer setting.
2. Reference enthalpy - controlling the economizer cycle by sensing the outdoor air humidity. The following table lists the selectable enthalpy values by potentiometer setting. If the outside air enthalpy value is less than the selected value, the economizer is allowed to operate.
3. Comparative enthalpy - utilizing a humidity sensor and a temperature sensor in both the return air stream and the outdoor air stream, the unit control processor (RTRM) will be able to establish which conditions are best suited for maintaining the zone temperature, i.e. indoor conditions or outdoor conditions. The potentiometer located on the ECA is non-functional when both the temperature and humidity sensors are installed.

Table 14. Potentiometer settings

Potentiometer Setting	Dry Bulb	Reference Enthalpy
A	73°F (22.8ºC)	27 Btu/lb (63 kJ/kg)
B	70°F (21.1ºC)	25 Btu/lb (58 kJ/kg)
C	67°F[(a)] (19.4ºC)	23 Btu/lb (53 kJ/kg)
D	63°F (17.2ºC)	22 Btu/lb (51 kJ/kg)
E	55ºF (12.8ºC)	19 Btu/lb (44 kJ/kg)

(a) Factory settings.

ReliaTel™ Control Heating Operation (for Cooling Only Units)

When the system switch is set to the “Heat” position and the zone temperature falls below the heating setpoint control band, the RTRM energizes (K1) relay coil. When the (K1) relay contacts close, located on the RTRM, the first stage electric heat contactor (AH or AH and CH) is energized.

If the first stage of electric heat can not satisfy the heating requirement, the RTRM energizes (K2) relay coil. When the (K2) relay contacts close, located on the RTRM, the second stage electric heat contactor (BH) is energized, if applicable. The RTRM cycles both the first and second stages of heat “On” and “Off” as required to maintain the zone temperature setpoint.

ReliaTel™ Control Heating Operation (for Gas Units)

When the system switch is set to the “Heat” position and the zone temperature falls below the heating setpoint control band, a heat cycle is initiated when the RTRM communicates ignition information to the Ignition module (IGN).

Ignition Module

Two-stage (IGN) runs self-check (including verification that the gas valve is de-energized). (IGN) checks the high-limit switches (TC01 and TC02) for normally closed contacts, the pressure switch (PS) for normally open contacts, and the flame rollout (FR) switch for continuity. (IGN) energizes inducer blower on high speed to check pressure switch closure. If the pressure switch is closed, the inducer blower starts a 20-second pre-purge (15 seconds on high speed followed by 5 seconds on low speed). If the pressure switch (PS) is still open, the inducer blower will continue to be energized on high speed until pressure switch closure. After pre-purge completes, the (IGN) energizes the first stage of the gas valve, initiates spark for 2 seconds minimum, 7 seconds maximum (ignition trial) and detects flame and de-energizes spark. From this point, a fixed 45 second indoor blower delay on timing starts. After the indoor blower delay on is completed, the (IGN) energizes the indoor blower. The (IGN) enters a normal operating loop where all inputs are continuously monitored. If the first stage of gas heat can not satisfy the heating requirement, the thermostat closes W2. The (IGN) energizes the second stage of the gas valve and the second stage of inducer blower. When the zone thermostat is satisfied, the (IGN) de-energizes the gas valve. The (IGN) senses loss of flame. The (IGN) initiates a 5 second inducer blower post purge. The (RTRM) initiates a second indoor blower delay off.

If the burner fails to ignite, the ignition module will attempt two retries before locking out. The green LED will indicate a lock out by two fast flashes. An ignition lockout can be reset by; Opening for 3 seconds and closing the main power disconnect switch.

1. Switching the “Mode” switch on the zone sensor to “OFF” and then to the desired position.
2. Allowing the ignition control module to reset automatically after one hour. Refer to the “Ignition Control Module Diagnostics” section for the LED diagnostic definitions.

When the fan selection switch is set to the “Auto” position, the RTRM energizes the indoor fan relay (F) coil approximately 30 second after initiating the heating cycle to start the indoor fan motor (IDM).

Table 15. Ignition module diagnostics

Steady light	Module is powered up, but no active call for heat.
Blinking at continuous steady rate	Active call for heat.
One blink	Loss of communication.
Two blinks	System lockout (failure to ignite, no spark, low/no gas pressure, etc.)
Three blinks	Pressure switch (no vent air flow, bad CBM, closed at initial call for heat). Auto reset.
Four blinks	High limit (excessive heat in combustion chamber, low airflow). Auto reset.
Five blinks	Flame sensed and gas valve not energized or flame sensed and no call for heat.

Table 15. Ignition module diagnostics (continued)

Six blinks	Flame rollout (CBM failure, incorrect gas pressure, incorrect primary air). Requires manual reset of the switch.
Seven blinks	ReliaTel™ module will communicate a heat fail diagnostic back to the RTRM.

Drain Pan Condensate Overflow Switch (Optional)

This input incorporates the condensate overflow switch (COF) mounted on the drain pan and the ReliaTel™ options module (RTOM). When the condensate level reaches the trip point for 6 continuous seconds, the RTOM will shut down all unit function until the overflow condition has cleared. The unit will return to normal operation after 6 continuous seconds with the COF in a non-tripped condition. If the condensate level causes the unit to shutdown more than 2 times in a 3 day period, the unit will be locked-out of operation. A manual reset of the diagnostic system through the zone sensor or Building Automation System (BAS) will be required. Cycling unit power will also clear the fault.

Sequence of Operation - Heat Pumps

Heating Operation

When the system switch is set to the “Heat” MODE, the RTRM energizes relay (K3). When the normally open (K3) contacts open, the switch over valves (SOV1 and 2) are de-energized. When the zone temperature falls below the heating setpoint controlband, the RTRM energizes the (K9) and (K10) relay coils on the RTRM. When the (K9) relay contacts close, the compressor contactor (CC1) coil is energized provided the low pressure control (LPC1), high pressure control (HPC1) and discharge line thermostat (TDL 1) are closed. When the CC1 contacts close, compressor (CPR1) and the outdoor fan motor (ODM) starts provided the normally open (ODF) relay contacts are closed.

The RTRM “Smart Recovery” function monitors the rate at which the zone temperature is changing every 9 minutes during the operating heating cycle. If the zone temperature is rising at a rate greater than 6ºF per hour, no additional heat is requested (auxiliary heat). If not, the RTRM energizes the first stage auxiliary heat. A minimum of 10 seconds “Off” time must have elapsed between heater cycles. If mechanical heat and first stage auxiliary heat cannot provide the 6ºF recovery rate, the RTRM energizes second stage auxiliary heat, if applicable. The RTRM continues to monitor the rate of change and stages the electric heat “Off” as it determines that the mechanical heat (compressor operation) is sufficient.

Demand Defrost

Demand defrost is a standard feature which permits defrost whenever coil icing conditions begin to significantly reduce unit capacity. To permit defrost, the outdoor temperature must be below 52ºF, coil temperature must be below 33ºF, and the delta temperature F must exceed a RTRM calculated value. After 30 minutes of run time under defrost permit conditions, the RTRM initiates a defrost cycle. Upon termination of this cycle, the RTRM monitors the outdoor temperature (ODT) and the coil temperature (CT) and calculates the delta temperature F (ODT - CT). This value is stored in memory and the RTRM calculates a defrost initiate value. The RTRM continually compares the delta temperature F to the defrost initiate value. Once the delta tee reaches the initiate value, a defrost cycle is initiated.

During the defrost cycle, the RTRM energizes the relay (K3), which energizes the switch over valves (SOV1 and 2) through the normally open K3 relay contacts. Then turns the outdoor fan motor (ODM) “Off” by de-energizing the (K8) relay, which de-energizes the (ODF) relay. The RTRM energizes the auxiliary electric heat contactor (AH) and (BH) (if applicable) if they are not operating, while maintaining compressor (CPR1) operation.

The defrost cycle is terminated based on the RTRM termination temperature calculation using the outdoor temperature (ODT) + 27ºF. The defrost termination temperature (DTT) will typically be between 37ºF and 52ºF.

Emergency Heat Operation

When the system selection switch is in the “EM HEAT” MODE, and the zone temperature falls below the heating setpoint controlband, the RTRM bypasses compressor and outdoor fan operation and energizes auxiliary heat. For gas heat, the RTRM communicates the gas heat staging request to the gas ignition module which initiates an ignition cycle corresponding to the requested stage. The gas ignition module controls the spark ignition, valve control, combustion blower and safety controls. When K1 relay contacts close, the first stage auxiliary electric heat contactor (AH or AH and CH) is energized. If the first stage of auxiliary electric heat can not satisfy the heating requirement, the RTRM energizes the K2 relay coil located on the RTRM. When the K2 relay contacts close, the second stage auxiliary electric heat contactor (BH) is energized. The RTRM cycles both the first and second stages of heat “On” and “Off” as required to maintain the zone temperature setpoint.

Verifying Proper Air Flow

⚠WARNING

Live Electrical Components!

Failure to follow all electrical safety precautions when exposed to live electrical components could result in death or serious injury.
When it is necessary to work with live electrical components, have a qualified licensed electrician or other individual who has been properly trained in handling live electrical components perform these tasks.

Units with 5-Tap Direct Drive Indoor Fan

Much of the systems performance and reliability is closely associated with, and dependent upon having the proper airflow supplied both to the space that is being conditioned and across the evaporator coil.

The indoor fan motor is factory wired to operate on speed tap 1 in the cooling and heating mode for electric/electric units. For gas/electric, heat pump units, the motor is factory wired to operate on speed tap 1 during cooling. For 3 and 4 tons Gas/ Electric units operating in heat mode, the minimum setting is Tap 4.

For these units, a separate tap terminal is provided to change speeds automatically between heating and cooling. The motor can be rewired for different speed settings should the application require it. Refer to the wiring diagram that shipped in the unit and the unit fan performance tables in the Service Facts.

The indoor fan motors are specifically designed to operate within the BHP parameters listed in the fan performance tables of the unit service facts.

When verifying direct drive fan performance, the tables must be used somewhat differently than those of belt driven fans. Fan performance diagnostics can be easily recognized when these tables are used correctly.

Before starting the SERVICE TEST, set the minimum position setpoint for the economizer to 0% using the setpoint potentiometer located on the Economizer Control (ECA), if applicable.

ReliaTel™ Control: Using the service test guide for component operation in the Pre-Start section, momentarily jump across the Test 1 and Test 2 terminals on LTB1 one time to start the Minimum Ventilation Test.

Units with Belt Drive Indoor Fan

Much of the systems performance and reliability is closely associated with, and dependent upon having the proper airflow supplied both to the space that is being conditioned and across the evaporator coil.

The indoor fan speed is changed by opening or closing the adjustable motor sheave.

Before starting the SERVICE TEST, set the minimum position setpoint for the economizer to 0% using the setpoint potentiometer located on the Economizer Control (ECA), if applicable.

ReliaTel™ Control: Using the Table 9, p. 40, momentarily jump across the Test 1 and Test 2 terminals on LTB1 one time to start the Minimum Ventilation Test.

Once the supply fan has started, check for proper rotation. The direction of rotation is indicated by an arrow on the fan housing.

With the fan operating properly, determine the total system airflow (CFM) by;

1. Measuring the actual RPM,
2. Measure the amperage at the supply fan contactor and compare it with the full load amp (FLA) rating stamped on the motor nameplate.
   a. Calculate the theoretical BHP using (Actual Motor Amps/Motor Nameplate Amps) X Motor HP.
   b. Using the fan performance table in the unit Service Fact, plot the actual RPM (Step 1) and the BHP (Step a) to obtain the operating CFM.
3. If the required CFM is too low, (external static pressure is high causing motor HP output to be below table value),
   a. Relieve supply and/or return duct static.
   b. Change indoor fan speed and repeat Step 1 and Step 2.

- To Increase Fan RPM; Loosen the pulley adjustment set screw and turn sheave clockwise.
- To Decrease Fan RPM; Loosen the pulley adjustment set screw and turn sheave counterclockwise.
- If the required CFM is too high, (external static pressure is low causing motor HP output to be above table value), change indoor fan speed and repeat Step 1 and Step 2.
- To stop the SERVICE TEST, turn the main power disconnect switch to the “Off” position or proceed to the next component start-up procedure.

Units with Constant CFM Direct Drive Indoor Fan

Much of the systems performance and reliability is closely associated with, and dependent upon having the proper airflow supplied both to the space that is being conditioned and across the evaporator coil. The indoor fan provides a constant CFM base on voltage output for the potentiometer on the RTOM board. Before starting the SERVICE TEST, set the minimum position setpoint for the economizer to 0 percent using the setpoint potentiometer located on the Economizer Control (ECA), if applicable.

ReliaTel™ Control: Using the Service Test Guide in the Pre-Start section of this IOM; momentarily jump across the Test 1 and Test 2 terminals on LTB1 one time to start the Minimum Ventilation Test.

Once the supply fan has started, determine the total system airflow (CFM) by:

1. Measure the DC voltage across pins TP1 and ground (screw on corner of RTOM board). Lookup desired CFM using the voltage CFM table shown on the access panel label or in the unit Service Facts; record corresponding voltage. Adjust potentiometer until output voltage across TP1 and ground achieves desired CFM setpoint.
2. To increase voltage/CFM, turn potentiometer clockwise.
3. To decrease voltage/CFM, turn potentiometer counter-clockwise.

Note: *With ID fan access panel removed, fan will operate at lower RPM due to the decrease in pressure. Once panel is installed, RPM will increase.*

3 to 5 Ton 17 Plus/WHC/DHC units with the constant CFM direct drive indoor fan

Proper airflow is critical to unit operation. All 17 Plus Precedent units (037, 047, and 067 units) and WHC/DHC use an indoor fan that provides a constant CFM. There are two different types of 17 Plus and WHC/DHC Precedent units: Single Zone VAV units and Multi-Speed units. Both types of units use the same type of indoor motor and the same airflow adjustment procedure.

To adjust airflow on a 17 Plus/WHC/DHC unit, the Service Test mode must be used for accurate results. Additionally, airflow adjustments should be made in either “Cool Stage 2” or any stage of heat because the fan is driven to its maximum setting during these stages. Only the maximum fan setting requires adjustment, all other fan speeds follow the maximum adjustment and do not require any adjustment.

Using the Service Test Guide in Table 9, p. 40, enter the unit into either “Cool Stage 2" or any stage of heat by using either the “Step Test Mode” or “Resistance Test Mode”.

Once the unit is in either “Cool Stage 2” or any stage of heat, system airflow (CFM) is determined by:

1. In the indoor fan compartment, locate the R136 potentiometer on the RTOM circuit board (also designated “DA COOL - FAN SPD”). Also, locate the TP1 test pin loop next to the R136 potentiometer.
2. Measure the DC Voltage across the test pin TP1 and unit chassis ground. Compare DC voltage to the CFM chart shown in Table 16, p. 51. Table 16, p. 51 shows what DC voltage corresponds to CFM per ton of unit cooling.

Note: *If 1200 cfm is required from a 3 tons unit (037) the R136 potentiometer should be adjusted so that the DC voltage measured at TP1 to ground reads 1.65 volts DC.*

3. To increase the TP1 voltage, turn the R136 potentiometer clockwise.
4. To decrease the TP1 voltage, turn the R136 potentiometer counter-clockwise.

Note: *With the indoor fan access panel removed, the fan will operate at a lower RPM because static pressure is reduced with the door open. Once the panel is returned the RPM of the indoor fan will increase.*

Table 16. CFM vs. Vdc

PWM% value	Potentiometer Voltage (Vdc)	CFM/Ton
70	<0.1	320
75	0.7	347
80	1.25	373
85	1.65	400
90	1.95	427
95	2.17	453
100	>2.4	480

ReliaTel™ Units Equipped with Direct Drive Indoor Plenum Fan (optional except for 10 Ton Units)

Much of the systems performance and reliability is closely associated with, and dependent upon having the proper airflow supplied both to the space that is being conditioned and across the evaporator coil. The indoor fan speed is changed by adjusting the voltage from the RTOM Indoor Fan Speed output to the direct drive plenum fan. If installed, before starting the SERVICE TEST disable the Economizer by disconnecting the 4 pin power connector located at the base of the Economizer Control (ECA).

Using the Service Test Guide in Table 9, p. 40, momentarily jump across the Test 1 and Test 2 terminals on LTB1. Repeat process until Service Test Mode is at Cool 2 (2-Steps of Cooling Applications Only) or Cool 3 (3-Steps of Cooling applications). The indoor motor shall be operating @ 100%, to verify turn DA COOL_FAN SPD potentiometer full clockwise, voltage should read ~7.5 Vdc across harness test terminals. The unit schematic illustrates location for measuring the indoor motor speed voltage.

Table 17. RPM table

PPF-IDFRPM Voltage Measurement	Motor rpm
1.00	N/A
1.25	N/A
1.50	N/A
1.75	N/A
2.00	N/A
2.25	325
2.50	402
2.75	465
3.00	544
3.25	630
3.50	716
3.75	775
4.00	845
4.25	912
4.50	976
4.75	1044
5.00	1115
5.25	1203
5.50	1253
5.75	1312
6.00	1368
6.25	1425
6.50	1475
6.75	1533
7.00	1581
7.25	1615
7.50	1615

Once the supply fan has started, determine the total system airflow (CFM).

1. Measure the DC voltage across harness test terminals. Using the fan rpm table shown above, determine RPM correlated to measured voltage.
2. If the required CFM is too low, (external static pressure is high causing motor HP output to be below table value),
   a. Relieve supply and/or return duct static.
   b. Change indoor fan speed and repeat Step 1 and Step 2.
3. To Increase/Decrease Fan RPM turn DA COOL_FAN SPD on the RTOM clockwise/counter-clockwise.
4. If the required CFM is too high, (external static pressure is low causing motor HP output to be above table value), change indoor fan speed and repeat Step 1 and Step 2.
5. Stop the SERVICE TEST, turn the main power disconnect switch to the “Off” position and reconnect Economizer 4-pin power connector if disconnected for this procedure.
6. Proceed to the next component start-up procedure.

Figure 61. Plenum fan rpm label

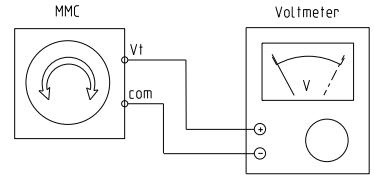

Push and turn knob counter-clockwise to increase voltage/RPM.

Push and turn knob clockwise to decrease voltage/RPM.

Table for T/YHC092E. T/YHC102E. T/YSC120E. T/YHC120E. WSC120E	
Potentiometer Voltage	Motor RPM
2.34	504
2.5	543
2.75	605
3	668
3.25	732
3.5	797
3.75	863
4	929
4.25	995
4.5	1061
4.75	1126
5	1191
5.25	1253
5.5	1315
5.75	1374
6	1432
6.25	1487
6.5	1539
6.75	1588
7	1633
7.25	1675
7.5	1700

Note: See fan tables for unit RPM and cfm limits.

4366-6924-01

Return Air Smoke Detector

The return air smoke detector is designed to shut off the unit if smoke is sensed in the return air stream. Sampling the airflow entering the unit at the return air opening performs this function.

In order for the smoke detector to properly sense smoke in the return air stream, the air velocity entering the unit must be between 500 and 4000 feet per minute. Equipment covered in this manual will develop an airflow velocity that falls within these limits over the entire airflow range specified in the evaporator fan performance tables.

Economizer Start-Up

⚠WARNING

Live Electrical Components!

Failure to follow all electrical safety precautions when exposed to live electrical components could result in death or serious injury.
When it is necessary to work with live electrical components, have a qualified licensed electrician or other individual who has been properly trained in handling live electrical components perform these tasks.

Minimum Position Setting for 7.5 to 10 Ton with Multi-Speed, or Single Zone VAV

⚠WARNING

Live Electrical Components!

Failure to follow all electrical safety precautions when exposed to live electrical components could result in death or serious injury.
When it is necessary to work with live electrical components, have a qualified licensed electrician or other individual who has been properly trained in handling live electrical components perform these tasks.

1. Apply power to the unit.
2. Using the Service Test Guide on unit access panel, momentarily jump across the Test 1 and Test 2 terminals on LTB1 one time to start indoor fan.
3. Turn the MIN POS - DESIGN potentiometer on the RTEM clockwise to open or counter-clockwise to close. The damper will open to this setting for low speed fan operation. When adjusting minimum position, the damper may move to the new setting in several small steps. Wait at least 15 seconds for the damper to settle at the new position.
4. Momentarily jump across the Test 1 and Test 2 terminals on LTB1, cycle through test modes to Cool 2 (2-Step Cooling applications) or Cool 3 (3-Step Cooling applications). Verify the indoor motor rpm is at 100% of the user selected airflow.
5. Turn the MIN POS - DCV potentiometer on the RTEM clockwise to open or counter-clockwise to close. This will set the minimum damper position for high speed fan operation.
6. The economizer minimum damper position for all fan speeds is complete. The RTEM will control minimum damper position along an imaginary line between the damper minimum positions based on fan speed.
7. Replace the filter access panel. The damper will close when the blower circuit is de-energized.

⚠WARNING

Live Electrical Components!

Failure to follow all electrical safety precautions when exposed to live electrical components could result in death or serious injury.
When it is necessary to work with live electrical components, have a qualified licensed electrician or other individual who has been properly trained in handling live electrical components perform these tasks.

Using the Service Test Guide in Table 9, p. 40, momentarily jump across the Test 1 and Test 2 terminals on LTB1 one time to start the Minimum Ventilation Test.

1. Set the minimum position setpoint for the economizer to the required percentage of minimum ventilation using the setpoint potentiometer located on the Economizer Control (ECA).

   The economizer will drive to its minimum position setpoint, exhaust fans (if applicable) may start at random, and the supply fan will start when the SERVICE TEST is initiated.

⚠WARNING

Rotating Components!

Failure to disconnect power before servicing could result in rotating components cutting and slashing technician which could result in death or serious injury. During installation, testing, servicing and troubleshooting of this product it may be necessary to work with live and exposed rotating components. Have a qualified or licensed service individual who has been properly trained in handling exposed rotating components, perform these tasks.

   The Exhaust Fan will start anytime the economizer damper position is equal to or greater than the exhaust fan setpoint.

2. Verify that the dampers stroked to the minimum position.
3. Momentarily jump across the Test 1 and Test 2 terminals on LTB1 one additional time if continuing from previous component start-up or until the desired start-up component Test is started.
4. Verify that the dampers stroked to the full open position.
5. To stop the SERVICE TEST, turn the main power disconnect switch to the “Off” position or proceed to the next component start-up procedure.

Compressor Start-Up

⚠WARNING

Live Electrical Components!

Failure to follow all electrical safety precautions when exposed to live electrical components could result in death or serious injury.
When it is necessary to work with live electrical components, have a qualified licensed electrician or other individual who has been properly trained in handling live electrical components perform these tasks.

Using the Service Test Guide in Table 9, p. 40, continue the SERVICE TEST start-up procedure for each compressor circuit.

1. Attach a set of service gauges onto the suction and discharge gauge ports for each circuit. Refer to the refrigerant circuit illustration in the Service Facts.
2. Momentarily jump across the Test 1 and Test 2 terminals on LTB one additional time if continuing from previous component start-up or until the desired start-up component Test is started.

Scroll Compressors:

   a. Once each compressor has started, verify that the rotation is correct. If a scroll compressor is rotating backwards, it will not pump and a loud rattling sound can be observed.
   b. If the electrical phasing is correct, before condemning a compressor, interchange any two leads (at the compressor Terminal block) to check the internal phasing. If the compressor runs backward for an extended period (15 to 30 minutes), the motor winding can overheat and cause the motor winding thermostat to open.

3. After the compressor and condenser fan have started and operated for approximately 30 minutes, observe the operating pressures. Compare the operating pressures to the operating pressure curve in the Service Facts.
4. Check system superheat. Follow the instruction listed on the superheat charging curve in the Service Facts. Superheat should be within ±5ºF of the superheat chart value.
5. Repeat Step 1 through Step 4 for each refrigerant circuit.
6. To stop the SERVICE TEST, turn the main power disconnect switch to the “Off” position or proceed to the next component start-up procedure.

Heating Start-Up

Using the Service Test Guide in Table 9, p. 40, continue the SERVICE TEST start-up procedure for each compressor circuit.

1. Clamp an amp meter around one of 1st stage heater power wires at the heater contactor.
2. Momentarily jump across the Test 1 and Test 2 terminals on LTB one additional time if continuing from previous component start-up or until the desired start-up component Test is started.
3. Verify that the heater stage is operating properly.
4. Clamp an amp meter around one of 2nd stage heater power wires at the heater contactor (if applicable).
5. Momentarily jump across the Test 1 and Test 2 terminals on LTB one additional time if continuing from previous component start-up or until the desired start-up component Test is started.
6. Verify that the heater stage is operating properly.
7. To stop the SERVICE TEST, turn the main power disconnect switch to the “Off” position or proceed to the next component start-up procedure.

Final System Setup

After completing all of the pre-start and start-up procedures outlined in the previous sections (i.e., operating the unit in each of its modes through all available stages of cooling and heating), perform these final checks before leaving the unit:

- Program the Night Setback (NSB) panel (if applicable) for proper unoccupied operation. Refer to the programming instructions for the specific panel.
- Verify that the Remote panel “System” selection switch, “Fan” selection switch, and “Zone Temperature” settings for automatic operation are correct.
- Inspect the unit for misplaced tools, hardware, and debris.
- Verify that all exterior panels including the control panel doors and condenser grilles are secured in place.
- Close the main disconnect switch or circuit protector switch that provides the supply power to the unit’s terminal block or the unit mounted disconnect switch.

Make sure all personnel are standing clear of the unit before proceeding. The system components will start when the power is applied.

Maintenance

⚠WARNING

Hazardous Service Procedures!

Failure to follow all precautions in this manual and on the tags, stickers, and labels could result in death or serious injury.
Technicians, in order to protect themselves from potential electrical, mechanical, and chemical hazards, MUST follow precautions in this manual and on the tags, stickers, and labels, as well as the following instructions: Unless specified otherwise, disconnect all electrical power including remote disconnect and discharge all energy storing devices such as capacitors before servicing. Follow proper lockout/tagout procedures to ensure the power can not be inadvertently energized.When necessary to work with live electrical components, have a qualified licensed electrician or other individual who has been trained in handling live electrical components perform these tasks.

Fan Belt Adjustment - Belt Drive Units

⚠WARNING

Live Electrical Components!

Failure to follow all electrical safety precautions when exposed to live electrical components could result in death or serious injury.
When it is necessary to work with live electrical components, have a qualified licensed electrician or other individual who has been properly trained in handling live electrical components perform these tasks.

⚠WARNING

Rotating Components!

Failure to disconnect power before servicing could result in rotating components cutting and slashing technician which could result in death or serious injury. During installation, testing, servicing and troubleshooting of this product it may be necessary to work with live and exposed rotating components. Have a qualified or licensed service individual who has been properly trained in handling exposed rotating components, perform these tasks.

The fan belts must be inspected periodically to assure proper unit operation.

Replacement is necessary if the belts appear frayed or worn. Units with dual belts require a matched set of belts to ensure equal belt length.

When removing or installing the new belts, do not stretch them over the sheaves. Loosen the belts using the belt tension adjustment bolts on the motor mounting base.

Once the new belts are installed, using a Browning or Gates tension gauge (or equivalent) illustrated in Figure 62, p. 55; adjust the belt tension as follows;

1. To determine the appropriate belt deflection;
   a. Measure the center-to-center shaft distance (in inches) between the fan and motor sheaves.
   b. Divide the distance measured in Step a by 64; the resulting value represents the amount of belt deflection that corresponds to the proper belt tension.
2. Set the large O-ring on the belt tension gauge at the deflection value determined in Step b.
3. Set the small O-ring at zero on the force scale of the gauge plunger.
4. Place the large end of the gauge at the center of the belt span; then depress the gauge plunger until the large O-ring is even with the top of the next belt or even with a straightedge placed across the fan and motor sheaves. Refer to the figure below.
5. Remove the belt tension gauge. The small O-ring now indicates a number other than zero on the plunger's force scale. This number represents the force (in pounds) required to give the needed deflection.
6. Compare the "force" scale reading (Step 5) with the appropriate "force" value listed in Table 18. If the "force" reading is outside the range, readjust the belt tension.

Note: *Actual belt deflection "force" must not exceed the maximum "force" value shown in Table 18.*

7. Recheck the belt tension at least twice during the first 2 to 3 days of operation. Belt tension may decrease until the new belts are "run in".

Figure 62. Belt tension gauge

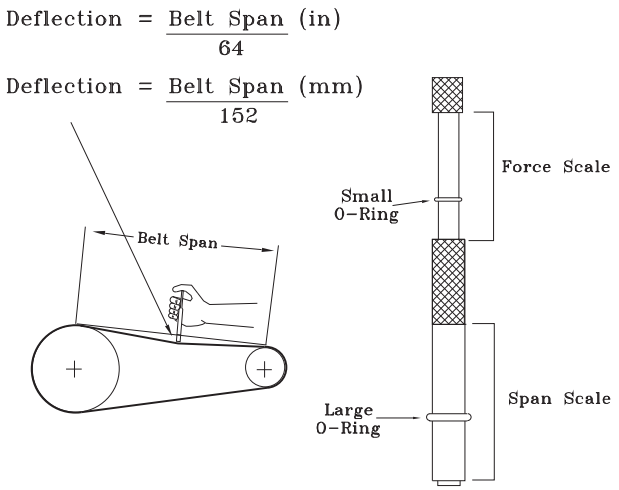

Table 18. Belt tension measurement and deflection ranges

Belts Cross Section	Small P.D Range	Deflection Force (Lbs.)					
		Super Gripbelts		Gripnotch		Steel Cable Gripbelts	
		Min.	Max.	Min.	Max.	Min.	Max
A	3.0 - 3.6	3	4 1/2	3 7/8	5 1/2	3 1/4	4
	3.8 - 4.8	3 1/2	5	4 1/2	6 1/4	3 3/4	4 3/4
	5.0 - 7.0	4	5 1/2	5	6 7/8	4 1/4	5 1/4
B	3.4 - 4.2	4	5 1/2	5 3/4	8	4 1/2	5 1/2
	4.4 - 5.6	5 1/8	7 1/8	6 1/2	9 1/8	5 3/4	7 1/4
	5.8 - 8.8	6 3/8	8 3/4	7 3/8	10 1/8	7	8 3/4

Monthly Maintenance

⚠WARNING

Hazardous Voltage!

Failure to disconnect power before servicing could result in death or serious injury.
Disconnect all electric power, including remote disconnects before servicing. Follow proper lockout/tagout procedures to ensure the power can not be inadvertently energized. Verify that no power is present with a voltmeter.

Filters

Inspect the return air filters. Clean or replace them if necessary. If included, leave filter removal tool in unit. Refer to the unit Service Facts for filter information.

Return Air Smoke Detector Maintenance

Airflow through the unit is affected by the amount of dirt and debris accumulated on the indoor coil and filters. To insure that airflow through the unit is adequate for proper sampling by the return air smoke detector, complete adherence to the maintenance procedures, including recommended intervals between filter changes, and coil cleaning is required.

Periodic checks and maintenance procedures must be performed on the smoke detector to insure that it will function properly. For detailed instructions concerning these checks and procedures, refer to the appropriate section(s) of the smoke detector Installation and Maintenance Instructions provided with the literature package for this unit.

Condensate Overflow Switch

During maintenance, the switch float (black ring) must be checked to ensure free movement up and down.

Cooling Season

- Check the unit's drain pans and condensate piping to ensure that there are no blockages.
- Inspect the evaporator and condenser coils for dirt, bent fins, etc. If the coils appear dirty, clean them according to the instructions described in "Coil Cleaning" later in this section.
- Manually rotate the condenser fan(s) to ensure free movement and check motor bearings for wear. Verify that all of the fan mounting hardware is tight.
- Inspect the F/A-R/A damper hinges and pins to ensure that all moving parts are securely mounted. Keep the blades clean as necessary.
- Verify that all damper linkages move freely; lubricate with white grease, if necessary.
- Check supply fan motor bearings; repair or replace the motor as necessary.
- Check the fan shaft bearings for wear. Replace the bearings as necessary.
- Check the supply fan belt. If the belt is frayed or worn, replace it. Refer to the "Fan Belt Adjustment" section for belt replacement and adjustments.
- Verify that all wire terminal connections are tight.
- Remove any corrosion present on the exterior surfaces of the unit and repaint these areas.
- Generally inspect the unit for unusual conditions (e.g., loose access panels, leaking piping connections, etc.).
- Make sure that all retaining screws are reinstalled in the unit access panels once these checks are complete.
- With the unit running, check and record the: ambient temperature; compressor suction and discharge pressures (each circuit); superheat (each circuit);

Record this data on an "operator's maintenance log" like the one shown in Table 19, p. 58. If the operating pressures indicate a refrigerant shortage, measure the system superheat. For guidelines, refer to the "Compressor Start-Up" section.

Important: *Do not release refrigerant to the atmosphere! If adding or removing refrigerant is required, the service technician must comply with all federal, state and local laws.*

Heating Season

- Inspect the unit's air filters. If necessary, clean or replace them.
- Check supply fan motor bearings; repair or replace the motor as necessary.
- Inspect both the main unit control panel and heat section control box for loose electrical components and terminal connections, as well as damaged wire insulation. Make any necessary repairs.
- If the unit is equipped with electric heat, verify that the electric heat system operates properly.
- If unit is equipped with gas heat, clean burner area and verify gas heat system operation.

Coil Cleaning

Regular coil maintenance, including annual cleaning, enhances the unit's operating efficiency by minimizing: compressor head pressure and amperage draw; evaporator water carryover; fan brake horsepower, due to increase static pressure losses; airflow reduction.

At least once each year, or more often if the unit is located in a "dirty" environment, clean the evaporator and condenser coils using the instructions outlined below. Be sure to follow these instructions as closely as possible to avoid damaging the coils.

Note: *For units equipped with hail guards follow removal procedure.*

Hail Guard Removal

Figure 63. Slide-style

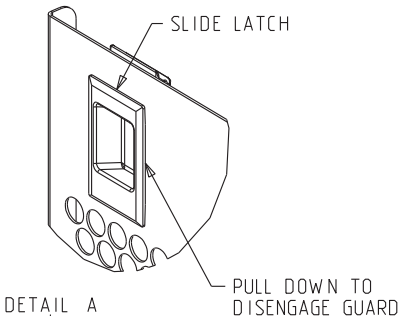

- Unlatch hail guards.
- Pull the top of the hail guard outward until the fastener studs are free of the retaining nuts.
- Lift the hail guard from the lower retaining bracket and set aside.

⚠WARNING

Hazardous Chemicals!

Failure to follow this safety precaution could result in death or serious injury. Coil cleaning agents can be either acidic or highly alkaline and can burn severely if contact with skin or eyes occurs.
Handle chemical carefully and avoid contact with skin. ALWAYS wear Personal Protective Equipment (PPE) including goggles or face shield, chemical resistant gloves, boots, apron or suit as required. For personal safety refer to the cleaning agent manufacturer's Materials Safety Data Sheet and follow all recommended safe handling practices.

To clean refrigerant coils, use a soft brush and a sprayer (either a garden pump-up type or a high-pressure sprayer). A high-quality detergent is also required; suggested brands include "SPREX A.C.", "OAKITE 161", "OAKITE 166" and "COILOX". If the detergent selected is strongly alkaline (ph value exceeds 8.5), add an inhibitor.

1. Remove enough panels from the unit to gain access to the coil.
2. Protect all electrical devices such as motors and controllers from any over spray.
3. Straighten any bent coil fins with a fin comb.

Mix the detergent with water according to the manufacturer's instructions. If desired, heat the solution to 150°F maximum to improve its cleansing capability.

⚠WARNING

Hazardous Pressures!

Failure to follow instructions below could result in a violent explosion, which could result in death or serious injury.
If a heat source is required to raise the tank pressure during removal of refrigerant from cylinders, use only warm water or heat blankets to raise the tank temperature. Do not exceed a temperature of 150°F. Do not under any circumstances apply direct flame to any portion of the cylinder.

Note: *Do not heat the detergent-and-water solution above 150°F. Hot liquids sprayed on the exterior of the coil will raise the coil's internal pressure and may cause it to burst. Failure to follow proper procedures can result in personal illness or injury or severe equipment damage.*

1. Pour the cleaning solution into the sprayer. If a high-pressure sprayer is used:
   a. do not allow sprayer pressure to exceed 600 psi.
   b. the minimum nozzle spray angle is 15 degrees.
   c. maintain a minimum clearance of 6-in. between the sprayer nozzle and the coil.
   d. spray the solution perpendicular (at 90 degrees) to the coil face.
2. Spray the leaving-airflow side of the coil first; then spray the opposite side of the coil. Allow the cleaning solution to stand on the coil for five minutes.
3. Rinse both sides of the coil with cool, clean water.
4. Inspect both sides of the coil; if it still appears to be dirty, repeat Step 2 and Step 3.
5. Reinstall all of the components and panels removed in Step 1 and any protective covers installed in Step 2.

Note: *For units equipped with hail guards follow reinstallation procedure listed below.*

Hail Guard Reinstallation

To reinstall the hail guard, locate the bottom of the hail guard in the lower bracket and secure it to the upper unit bracket with the attached fasteners.

Note: *Secure hail guard latches.*

1. Restore the unit to its operational status and check system operation.

Final Process

For future reference, you may find it helpful to record the unit data requested below in the blanks provided.

Complete Model Number

_____

Unit Serial Number

_____

Wiring Diagram Numbers (from unit control panel)

_____

Schematics

_____

Connections

_____

Table 19. Sample maintenance log

Date	Current Ambient Temp. F/C	Refrigerant Circuit #1						Refrigerant Circuit #2					
		Compr. Oil Level	Suct. Press. Psig/kPa	Disch. Press. Psig/ kPa	Liquid Press. Psig/ kPa	Super-heat F/ C	Sub-cool. F/C	Compr. Oil Level	Suct. Press. Psig/kPa	Disch. Press. Psig/kPa	Liquid Press. Psig/kPa	Super-heat F/C	Sub-cool. F/ C
		- ok - low						- ok - low					
		- ok - low						- ok - low					
		- ok - low						- ok - low					
		- ok - low						- ok - low					
		- ok - low						- ok - low					
		- ok - low						- ok - low					
		- ok - low						- ok - low					
		- ok - low						- ok - low					
		- ok - low						- ok - low					
		- ok - low						- ok - low					
		- ok - low						- ok - low					

Troubleshooting

⚠WARNING

Hazardous Service Procedures!

Failure to follow all precautions in this manual and on the tags, stickers, and labels could result in death or serious injury.
Technicians, in order to protect themselves from potential electrical, mechanical, and chemical hazards, MUST follow precautions in this manual and on the tags, stickers, and labels, as well as the following instructions: Unless specified otherwise, disconnect all electrical power including remote disconnect and discharge all energy storing devices such as capacitors before servicing. Follow proper lockout/tagout procedures to ensure the power can not be inadvertently energized.When necessary to work with live electrical components, have a qualified licensed electrician or other individual who has been trained in handling live electrical components perform these tasks.

ReliaTel™ Control

The RTRM has the ability to provide the service personnel with some unit diagnostics and system status information.

Before turning the main power disconnect switch “Off”, follow the steps below to check the ReliaTel™ Refrigeration Module (RTRM). All diagnostics and system status information stored in the RTRM will be lost when the main power is turned “Off”.

⚠WARNING

Live Electrical Components!

Failure to follow all electrical safety precautions when exposed to live electrical components could result in death or serious injury.
When it is necessary to work with live electrical components, have a qualified licensed electrician or other individual who has been properly trained in handling live electrical components perform these tasks.

1. Verify that the Liteport LED on the RTRM is burning continuously. If the LED is lit, go to Step 3.
2. If the LED is not lit, verify that 24 Vac is presence between J1-1 and J1-2. If 24 Vac is present, proceed to Step 3. If 24 Vac is not present, check the unit main power supply, check transformer (TNS1). Proceed to Step 3 if necessary.
3. Utilizing “Method 1” or “Method 2” in the “System Status Diagnostic” section, check the following:

- System status.
- Heating status.
- Cooling status.

If a System failure is indicated, proceed to Step 4. If no failures are indicated, proceed to Step 5.

4. If a System failure is indicated, recheck Step 1 and Step 2. If the LED is not lit in Step 1, and 24 Vac is present in Step 2, the RTRM has failed. Replace the RTRM.
5. If no failures are indicated, use one of the TEST mode procedures described in the “Unit Start-Up” section to start the unit. This procedure will allow you to check all of the RTRM outputs, and all of the external controls (relays, contactors, etc.) that the RTRM outputs energize, for each respective mode. Proceed to Step 6.
6. Step the system through all of the available modes, and verify operation of all outputs, controls, and modes. If a problem in operation is noted in any mode, you may leave the system in that mode for up to one hour while troubleshooting. Refer to the sequence of operations for each mode, to assist in verifying proper operation. Make the necessary repairs and proceed to Step 7 and Step 8.
7. If no abnormal operating conditions appear in the test mode, exit the test mode by turning the power “Off” at the main power disconnect switch.
8. Refer to the individual component test procedures if other microelectronic components are suspect.

System Status Checkout Procedure

“System Status” is checked by using one of the following two methods:

Method 1

If the Zone Sensor Module (ZSM) is equipped with a remote panel with LED status indication, you can check the unit within the space. If the ZSM does not have LED’s, use Method 2. BAYSENS110*, BAYSENS109*, BAYSENS119*, and BAYSENS023A all have the remote panel indication feature. The LED descriptions are listed below.

Zone Sensor LED 1 (System)

“On” during normal operation.

“Off” if a system failure occurs or the LED fails.

“Flashing” indicates test mode.

Zone Sensor LED 2 (Heat)

“On” when the heat cycle is operating.

“Off” when the heat cycle terminates or the LED fails.

“Flashing” indicates a heating failure.

Zone Sensor LED 3 (Cool)

“On” when the cooling cycle is operating.

“Off” when the cooling cycle terminates or the LED fails.

“Flashing” indicates a cooling failure.

Zone Sensor LED 4 (Service)

"On" indicates a clogged filter.

"Off" during normal operation.

"Flashing" indicates an evaporator or condensate overflow switch failure.

Below is the complete listing of failure indication causes.

System Failure

Check the voltage between terminals 6 and 9 on J6, it should read approximately 32 Vdc. If no voltage is present, a system failure has occurred. Refer to Step 4 in the previous section for the recommended troubleshooting procedure.

Cooling Failure

- Cooling and heating set point (slide pot) on the zone sensor has failed. Refer to the "Zone Sensor Test Procedure" section.
- Zone temperature thermistor ZTEMP on ZTS failed. Refer to the "Zone Sensor Test Procedure" section.
- CC1 or CC2 24 Vac control circuit has opened, check CC1 and CC2 coils, and any of the controls below that apply to the unit (HPC1, HPC2).
- LPC1 has opened during the 3 minute minimum "on time" during 4 consecutive compressor starts, check LPC1 or LPC2 by testing voltage between the J1-8 and J3-2 terminals on the RTRM and ground. If 24 Vac is present, the LPC's has not tripped. If no voltage is present, LPC's has tripped.

Service Failure

- If the supply fan proving switch has closed, the unit will not operate (when connected to RTOM), check the fan motor, belts, and proving switch.
- Clogged filter switch has closed, check the filters.
- If the condensate overflow switch is closed, the unit will not operate, check the float position is not in a tripped condition and verify an "open" between wires connecting to RTOM J6-1, J6-2.

Simultaneous Heat and Cool Failure

- Emergency Stop is activated.

Method 2

The second method for determining system status is done by checking voltage readings at the RTRM (J6). The system indication descriptions and the approximate voltages are listed below.

System Failure

Measure the voltage between terminals J6-9 and J6-6.

Normal Operation = approximately 32 Vdc.

System Failure = less than 1 Vdc, approximately 0.75 Vdc.

Test Mode = voltage alternates between 32 Vdc and 0.75 Vdc.

Heat Failure

Measure the voltage between terminals J6-7 and J6-6.

Heat Operating = approximately 32 Vdc.

Heat Off = less than 1 Vdc, approximately 0.75 Vdc.

Heating Failure = voltage alternates between 32 Vdc and 0.75 Vdc.

Cool Failure

Measure the voltage between terminals J6-8 and J6-6.

Cool Operating = approximately 32 Vdc.

Cool Off = less than 1 Vdc, approximately 0.75 Vdc.

Cooling Failure = voltage alternates between 32 Vdc and 0.75 Vdc.

Service Failure

Measure the voltage between terminals J6-10 and J6-6.

Clogged Filter = Approximately 32 Vdc.

Normal = Less than 1 Vdc, approximately 0.75 Vdc Fan Failure = voltage alternates between 32 Vdc and 0.75 Vdc.

To use LED's for quick status information at the unit, purchase a BAYSENS110* ZSM and connect wires with alligator clamps to terminals 6 through 10. Connected each respective terminal wire (6 through 10) from the Zone Sensor to the unit J6 terminals 6 through 10.

Note: *If the system is equipped with a programmable zone sensor, BAYSENS119* the LED indicators will not function while the BAYSENS110* is connected.*

Resetting Cooling and Heating Lockouts

Cooling Failures and Heating Lockouts are reset in an identical manner. Method 1 explains resetting the system from the space; Method 2 explains resetting the system at the unit.

Note: *Before resetting Cooling Failures and Heating Lockouts check the Failure Status Diagnostics by the methods previously explained. Diagnostics will be lost when the power to the unit is disconnected.*

Method 1

To reset the system from the space, turn the "Mode" selection switch at the zone sensor to the "Off" position. After approximately 30 seconds, turn the "Mode" selection switch to the desired mode, i.e. Heat, Cool or Auto.

Method 2

To reset the system at the unit, cycle the unit power by turning the disconnect switch "Off" and then "On".

Lockouts can be cleared through the building management system. Refer to the building management system instructions for more information.

Zone Temperature Sensor (ZTS) Service Indicator

The ZSM SERVICE LED is a generic indicator, that will signal the closing of a Normally Open switch at any time, providing the Indoor Motor (IDM) is operating. This indicator is usually used to indicate a clogged filter, or an air side fan failure.

The RTRM will ignore the closing of this Normally Open switch for 2 (±1) minutes. This helps prevent nuisance SERVICE LED indications. The exception is the LED will flash 40 seconds after the fan is turned “On” if the Fan Proving Switch is not made.

Clogged Filter Switch

This LED will remain lit the entire time that the Normally Open switch is closed. The LED will be turned off immediately after resetting the switch (to the Normally Open position), or any time that the IDM is turned “Off”.

If the switch remains closed, and the IDM is turned “On”, the SERVICE LED will be turned “On” again after the 2 (±1) minute ignore delay.

This LED being turned “On”, will have no other affect on unit operation. It is an indicator only.

Fan Failure Switch

When the “Fan Failure” switch is wired to the RTOM, the LED will remain flashing the entire time the fan proving switch is closed, indicating a fan failure, and it will shut the unit operations down.

Condensate Overflow Switch

When the “Condensate Overflow Switch" is closed, a drain pan overflow condition is indicated and it will shut unit operations down.

Zone Temperature Sensor (ZTS) Test

Note: *These procedures are not for programmable or digital models and are conducted with the Zone Sensor Module electrically removed from the system.*

Test 1 Zone Temperature Thermistor (ZTEMP)

This component is tested by measuring the resistance between terminals 1 and 2 on the Zone Temperature Sensor. Below are some typical indoor temperatures, and corresponding resistive values.

Test 2 Cooling Set Point (CSP) and Heating Set Point (HSP)

Table 20. Cooling (CSP) and heating setpoint (HSP)

Zone Temperature		Nominal ZTEMP Resistance	Nominal CSP or HSP Resistance
50°F	10.0 C°	19.9 K-Ohms	889 Ohms
55°F	12.8 C°	17.47 K-Ohms	812 Ohms
60°F	15.6 C°	15.3 K-Ohms	695 Ohms
65°F	18.3 C°	13.49 K-Ohms	597 Ohms
70°F	21.1 C°	11.9 K-Ohms	500 Ohms
75°F	23.9 C°	10.50 K-Ohms	403 Ohms
80°F	26.7 C°	9.3 K-Ohms	305 Ohms
85°F	29.4 C°	8.25 K-Ohms	208 Ohms
90°F	32.2 C°	7.3 K-Ohms	110 Ohms

The resistance of these potentiometers are measured between the following ZSM terminals. Refer to the chart above for approximate resistances at the given setpoints.

Cool SP = Terminals 2 and 3
Range = 100 to 900 Ohms approximate.

Heat SP = Terminals 2 and 5
Range = 100 to 900 Ohms approximate.

Test 3 System Mode and Fan Selection

The combined resistance of the Mode selection switch and the Fan selection switch can be measured between terminals 2 and 4 on the Zone Sensor. The possible switch combinations are listed below with their corresponding resistance values.

Test 4 LED Indicator Test, (SYS ON, HEAT, COOL and SERVICE)

Method 1

Testing the LED using a meter with diode test function. Test both forward and reverse bias. Forward bias should measure a voltage drop of 1.5 to 2.5 volts, depending on your meter. Reverse bias will show an Over Load, or open circuit indication if LED is functional.

Method 2

Testing the LED with an analog Ohmmeter. Connect Ohmmeter across LED in one direction, then reverse the leads for the opposite direction. The LED should have at least 100 times more resistance in reverse direction, as compared with the forward direction. If high resistance in both directions, LED is open. If low in both directions, LED is shorted.

Method 3

To test LED's with ZSM connected to unit, test voltages at LED terminals on ZSM. A measurement of 32 Vdc, across an unlit LED, means the LED has failed.

Note: *Measurements should be made from LED common (ZSM terminal 6 to respective LED terminal). Refer to the Zone Sensor Module (ZSM) Terminal Identification table at the beginning of this section.*

Programmable and Digital Zone Sensor Test

Testing Serial Communication Voltage

⚠WARNING

Live Electrical Components!

Failure to follow all electrical safety precautions when exposed to live electrical components could result in death or serious injury.
When it is necessary to work with live electrical components, have a qualified licensed electrician or other individual who has been properly trained in handling live electrical components perform these tasks.

1. Verify 24 Vac is present between terminals J6-14 and J6-11.
2. Disconnect wires from J6-11 and J6-12. Measure the voltage between J6-11 and J6-12, should be about 32 Vdc.
3. Reconnect wires to terminals J6-11 and J6-12. Measure voltage again between J6-11 and J6-12, voltage should flash high and low every 0.5 seconds. The voltage on the low end will measure about 19 Vdc, while the voltage on the high end will measure from approximately 24 to 38 Vdc.
4. Verify all modes of operation, by running the unit through all of the steps in the "Test Modes" section discussed in "Unit Start-Up".
5. After verifying proper unit operation, exit the test mode. Turn the fan on continuously at the ZSM, by pressing the button with the fan symbol. If the fan comes on and runs continuously, the ZSM is good. If you are not able to turn the fan on, the ZSM is defective.

ReliaTel™ Refrigeration Module (RTRM) Default Chart

If the RTCI loses input from the building management system, the RTRM will control in the default mode after approximately 15 minutes. If the RTRM loses the Heating and Cooling setpoint input, the RTRM will control in the default mode instantaneously. The temperature sensing thermistor in the Zone Sensor Module is the only component required for the "Default Mode" to operate.

Unit Operation without a Zone Sensor

This procedure is for temporary operation only. The economizer and condenser fan cycling functions are disabled.

⚠WARNING

Hazardous Voltage!

Failure to disconnect power before servicing could result in death or serious injury.
Disconnect all electric power, including remote disconnects before servicing. Follow proper lockout/tagout procedures to ensure the power can not be inadvertently energized. Verify that no power is present with a voltmeter.

1. Open and Lock the unit disconnect switch.
2. Remove the Outside Air Sensor (OAS) from the condenser section of unit.
3. Use two (2) wire nuts, to individually cap the wires.
4. Locate the RTRM (J6). Connect two (2) wires to terminals J6-1 and 2.
5. Connect the sensor (OAS) using two wire nuts to the two (2) field supplied wires that were connected to terminals 1 and 2 on J6.

Table 21. Fault detection and diagnostic codes

Failures	Primary Fault Codes								Information Code		
	Mixed Air Temp Sensor Fail	Outdoor Temp Sensor Fail	Economizer Actuator Fault	RTEM Comm Fail	Pressure Dead band Fail (If Used)	Temp Sensor Fail (If Used)	Airflow Sensor Fail (If Used)	Space Press Dead bandFail (If Used)	Unit Fails to Economize	Unit Economizing When It Should Not	Damper Position % Indicated
Damper stuck at Minimum			X		X[(a)]		X[(a)]	X[(a)]	X		X
Damper Stuck Open			X		X[(a)]		X[(a)]	X[(a)]		X	X
Mixed Sensor Failure	X										X
Supply Air Sensor Failure						X					X
Outdoor Air Temperature Fail		X									X
Power loss to RTEM				X							
Failed or Power Loss to Actuator			X								X
Mechanical Failure of Actuator							X				

(a) If goes out of range.

Table 22. Low leak economizer sensor values

Sensor Values Data					
Temp °F	Resistance (K ohms)	Temp °F	Resistance (K ohms)	Temp °F	Resistance (K ohms)
40	26.097	54	17.847	68	12.435
41	25.383	55	17.382	69	12.126
42	24.690	56	16.930	70	11.827
43	24.018	57	16.491	71	11.535
44	23.367	58	16.066	72	11.252
45	22.736	59	15.654	73	10.977
46	22.132	60	15.253	74	10.709
47	21.530	61	14.864	75	10.448
48	20.953	62	14.486	76	10.194
49	20.396	63	14.119	77	9.949
50	19.854	64	13.762	78	9.710
51	19.330	65	13.416	79	9.477
52	18.821	66	13.078	80	9.250
53	18.327	67	12.752	81	9.030

Unit Economizer Control (ECA) Troubleshooting ReliaTel™ Control

Verify Economizer Status by Economizer Actuator (ECA) LED indicator:

OFF: No Power or Failure.

ON: Normal, OK to Economize.

Slow Flash: Normal, not OK to Economize.

Fast Flash - 1/2 Second On / 2 Seconds Off:

Error Code:

Communications Failure.

Pulse Flash: 2 Seconds On / 1/2 Second Off:

Error Code:

1. Flash: Actuator Fault.
2. Flashes:CO2 Sensor.
3. Flashes: RA Humidity Sensor.
4. Flashes: RA Temp Sensor.
5. Flashes: OA Quality Sensor.
6. Flashes: OA Humidity Sensor.
7. Flashes: OA Temp Sensor.
8. Flashes: MA Temp Sensor.
9. Flashes: RAM Fault.
10. Flashes: ROM Fault.
11. Flashes: EEPROM F.

Mixed Air Temperature Low Limit Diagnostic

In all conditions on all ReliaTel™ controlled units, if the mixed air temperature falls below 45ºF, the mixed air temperature low limit diagnostic is active and the economizer actuator will close to the active minimum position. On Title 24 compliant units, ReliaTel™ will set an auto-reset diagnostic to be used by BAS and TD-5 when the mixed air temperature low limit is active.

The RTEM will revert to normal operation when the mixed air temperature rises above 48ºF. The diagnostic will be reset when the mixed air temperature low limit is inactive.

Troubleshooting Procedures for Direct Drive Plenum Fan

Prior to troubleshooting, verify all wiring and wiring connections. The motor has internal protections that will shut down the motor before damage occurs. A power cycle is required to reset some of the internal protections. Before proceeding, power down unit for 1 minute and then power on.

Please follow steps sequentially unless directed differently in solution.

Refer to RT-SVB90*-EN for a comprehensive troubleshooting guide.

Wiring Diagrams

Note: *Wiring diagrams can be accessed using e-Library by entering the diagram number in the literature order number search field or by contacting technical support.*

Table 23. Unit wiring diagram numbers

Schematic Type	Voltage	Drawing Number	Description
Control	**208-230, 460, 575**	4366-1007	6 to 7.5 Ton Heat Pump
Control	**208-230, 460, 575**	4366-1043	10 Ton Heat Pump
Control	**208-230, 460, 575**	1213-2085	3 to 5 Ton Standard Efficiency Heat Pump/Direct Drive Motor
Control	**208-230, 460, 575**	1213-2086	3 to 5 Ton High Efficiency Duel Fuel/Direct Drive Motor
Control	**208-230, 460, 575**	1213-2087	3 to 5 Ton High Efficiency Heat Pump/Direct Drive Motor
Control	**230, 460, 575**	1213-2520	WSC(092-120)H
Control	**230, 460, 575**	1213-2521	WHC(074-120)H
Control	**230, 460, 575**	1213-2523	DHC(074-102)H
Control	**230, 460, 575**	1213-2524	DHC120H
Control	**230, 460, 575**	1213-2707	WHC120H
Power and Control	**230-460**	4366-7427	230-460 V/60 Hz/3 Ph - 10 Ton Heat Pump
	575	4366-7428	575 V/60 Hz/3 Ph - 10 Ton Heat Pump
Power	**230 V**	4366-1014	230 V/60 Hz/3 Ph 7.5 Ton Heat Pump / Belt Drive Motor
Power	**230 V**	4366-1036	230 V/60 Hz/3 Ph 10 Ton Heat Pump / Belt Drive Motor
Power	**460-575 V**	4366-1010	460-575 V/60 Hz/3 Ph 7.5 Ton Heat Pump / Belt Drive Motor
Power	**460-575 V**	4366-1035	460-575 V/60 Hz/3 Ph 10 Ton Heat Pump / Belt Drive Motor
Power	**208-230, 460, 575**	1213-2083	3 to 5 Ton Heat Pump/Direct Drive Motor
Power	**230, 460, 575**	1213-2515	WSC(092-102)H CONSTANT VOLUME IDM
Power	**230, 460, 575**	1213-2516	WSC(092-120)H, WHC(074-102)H, DHC(074-102)H, Multi-Speed IDM, SZVAV, MZVAV IDM
Power	**230, 460, 575**	1213-2517	DHC120H, WHC120H
Connection	**208-230, 460, 575**	4366-1542	208-230,460,575 V/60 Hz/3 Ph 6 to 7.5 Ton Heat Pump / Belt Drive
Connection	**208-230, 460, 575**	4366-1535	208-230,460,575 V/60 Hz/3 Ph 10 Ton Heat Pump / Belt Drive
Connection	**208-230, 460, 575**	4366-7446	230-460 V/60 Hz/3 Ph - 10 Ton Heat Pump
Connection	**208-230, 460, 575**	4366-7447	575 V/60 Hz/3 Ph - 10 Ton Heat Pump
Connection	**208-230, 460, 575**	4366-1031	Through The Base Utilities Schematic
Connection	**208-230, 460, 575**	4366-1048	CO_2/Ventilation Override Schematics
Connection - Electric Heat	**208-240V**	436655740110	9.0 and 18.0 kW - 208 to 240 V/60 Hz/3 Ph BAYHTRU309*, BAYHTRU318*
Connection - Electric Heat	**208-240V**	436655750110	27.0 and 36.0 kW - 208 to 240V/60Hz/3 Ph BAYHTRU327*, BAYHTRU336*
Connection - Electric Heat	**208-240V**	436655780110	27.0 and 36.0 kW - 208 to 240 V/60 Hz/3 Ph BAYHTRU427*, BAYHTRUW27*, BAYHTRU436*, BAYHTRUW36*
Connection - Electric Heat	**208-240V**	436667380110	54.0 kW - 208 to 240 V/60 Hz/3 Ph BAYHTRA354*
Connection - Electric Heat	**208-240V**	436667610110	9.0 and 18.0 kW - 208 to 240 V/60 Hz/3 Ph BAYHTRA309*, BAYHTRA318*
Connection - Electric Heat	**208-240V**	436667620110	27.0 and 36.0 kW - 208 to 240 V/60 Hz/3 Ph BAYHTRA327*, BAYHTRA336*
Connection - Electric Heat	**208-240 V**	4366-1084	9.0 and 18.0 kW - 208 to 240 V/60 Hz/3 Ph BAYHTRS309*, BAYHTRS318*

Table 23. Unit wiring diagram numbers (continued)

Schematic Type	Voltage	Drawing Number	Description
Connection - Electric Heat	**208-240 V**	4366-1094	12.0 and 17.4 kW - 208 to 240 V/60 Hz/3 Ph BAYHTRR312*, BAYHTRR318*
Connection - Electric Heat	**208-240 V**	4366-1095	23.0 kW - 208 to 40 V/60 Hz/3 Ph BAYHTRR323*
Connection - Electric Heat	**208-240 V**	4366-1089	27.0 and 36.0 kW - 208 to 240 V/60 Hz/3 Ph BAYHTRS327*, BAYHTRS336*
Connection - Electric Heat	**208-240 V**	4366-1086	54.0 kW - 208 to 240 V/60 Hz/3 Ph BAYHTRT354*
Connection - Electric Heat	**208-600 V**	4366-1096	6.0 kW - 208 to 600 V/60 Hz/3 Ph BAYHTRR306*, BAYHTRR406*, BAYHTRRW06*
Connection - Electric Heat	**208-600 V**	4366-1097	9.0 and 18 kW - 480 to 600 V/60 Hz/3 Ph BAYHTRS409*, BAYHTRSW09*, BAYHTRS418*, BAYHTRT418*, BAYHTRSW18*, BAYHTRTW18*
Connection - Electric Heat	**208-600 V**	4366-1087	12.0, 17.4 and 23.0 kW - 480 to 600 V/60 Hz/3 Ph BAYHTRR412*, BAYHTRR418*, BAYHTRR423*, BAYHTRRW12*, BAYHTRRW18*, BAYHTRRW23*
Connection - Electric Heat	**208-600 V**	4366-1089	27.0 and 36.0 kW - 480 to 600 V/60 Hz/3 Ph BAYHTRS427*, BAYHTRT427*, BAYHTRSW27*, BAYHTRTW27*, BAYHTRS436*, BAYHTRT436*, BAYHTRSW36*, BAYHTRTW36*
Connection - Electric Heat	**208-600 V**	4366-1090	54.0 kW - 480 to 600 V/60 Hz/3 Ph BAYHTRT454*, BAYHTRTW54*
Component Location Diagram	**208-600 V**	1213-3770	3 to 4 Ton Heat Pump Device Location (F-CAB)
Component Location Diagram	**208-600 V**	1213-3771	5 Ton Heat Pump Device Location (C/D-CAB)
Connection - Electric Heat	**480-600V**	436655770110	9.0 and 18.0 kW - 480 V/60 Hz/3 Ph BAYHTRU409*, BAYHTRU418* and 18 kW -600 V/60 Hz/3 Ph BAYHTRUW18*
Connection - Electric Heat	**480-600V**	436667370110	54.0 kW - 480 to 600 V/60 Hz/3 Ph BAYHTRA454*, BAYHTRAW54*
Connection - Electric Heat	**480-600V**	436667630110	9.0 and 18.0 kW - 480 V/60 Hz/3 Ph BAYHTRA409*, BAYHTRA418*, and 18 kW - 600 V/60 Hz/3 Ph BAYHTRAW18*
Connection - Electric Heat	**480-600V**	436667640110	27.0 and 36 kW - 480 to 600 V/60 Hz/3 Ph BAYHTRA427*, BAYHTRAW27*, BAYHTRA436*, BAYHTRAW36*
Options	**230, 460, 575**	1213-2667	Option - RTVM, D/E Cabinet
Options	**230, 460, 575**	1213-2668	Option - MULTI-ZONE VAV, D/E Cabinet
Device Location	**230, 460, 575**	1213-2698	WSC(092-102)H ReliaTel™, Belt Drive Indoor Fan, Heat Pump, C/D Cabinet, Device Location
Device Location	**230, 460, 575**	1213-2699	WSC(092-120)H ReliaTel™, EBM Indoor Fan, Heat Pump, C/D Cabinet Device Location
Device Location	**230, 460, 575**	1213-2789	WHC(074-102)H ReliaTel™, EBM Indoor Fan, High Efficiency Heat Pump, D Cabinet Device Location
Device Location	**230, 460, 575**	1213-2790	WHC120H and DHC120H ReliaTel™, EBM Indoor Fan, High Efficiency Heat Pump, E Cabinet Device Location

Limited Warranty

Heat Pump WCD, WCH, WSC, WHC and DHC (Parts Only)

Models Less Than 20 Tons for Commercial Use*

This warranty is extended by Trane® to the original purchaser and to any succeeding owner of the real property to which the Heat Pump is originally affixed, and applies to products purchased and retained for use within the U.S.A. and Canada. There is no warranty against corrosion, erosion or deterioration.

If any part of your Heat Pump fails because of a manufacturing defect within one year from the date of the original purchase, Warrantor will furnish without charge the required replacement part.

In addition, if the sealed motor-compressor fails because of a manufacturing defect within the second through fifth year from the date of original purchase, Warrantor will furnish without charge the required replacement compressor.

In dual fuel (DHC) models, if the steel heat exchanger fails because of a manufacturing defect within the second through fifth year from the date of original purchase, Warrantor will furnish without charge a replacement heat exchanger.

In addition, if the optional, factory installed, stainless steel heat exchanger fails because of a manufacturing defect within ten years from the date of start-up, Warrantor will furnish without charge a replacement heat exchanger. Any local transportation, related service labor and diagnosis calls are not included.

Warrantor's obligations and liabilities under this warranty are limited to furnishing F.O.B. Warrantor factory or warehouse at Warrantor designated shipping point, freight allowed to Buyer's city, replacement parts for Warrantor's products covered under this warranty. Warrantor shall not be obligated to pay for the cost of lost refrigerant. No liability shall attach to Warrantor until products have been paid for and then liability shall be limited solely to the purchase price of the equipment under warranty shown to be defective.

THE WARRANTY AND LIABILITY SET FORTH HEREIN ARE IN LIEU OF ALL OTHER WARRANTIES AND LIABILITIES, WHETHER IN CONTRACT OR IN NEGLIGENCE, EXPRESS OR IMPLIED, IN LAW OR IN FACT, INCLUDING IMPLIED WARRANTIES OF MERCHANTABILITY AND FITNESS FOR PARTICULAR USE, AND IN NO EVENT SHALL WARRANTOR BE LIABLE FOR ANY INCIDENTAL OR CONSEQUENTIAL DAMAGES.

Some states do not allow limitations on how long an implied warranty lasts or do not allow the exclusion or limitation of incidental or consequential damages, so the above limitation or exclusion may not apply to you. This warranty gives you specific legal rights, and you may also have other rights which vary from state to state.

Trane

2701 Wilma Rudolph Blvd.

Clarksville, TN 37040-1008

Attention: Manager, Product Service

GW-604-4800

* This warranty is for commercial usage of said equipment and not applicable when the equipment is used for a residential application. Commercial use is any application where the end purchaser uses the product for other than personal, family or household purposes.

**A 5 year limited warranty is provided for the optional "Low Leak" economizer when combined with the additional FDD (Fault Detection and Diagnostics) option.

Trane and American Standard create comfortable, energy efficient indoor environments for commercial and residential applications. For more information, please visit trane.com or americanstandardair.com.

Trane and American Standard have a policy of continuous product and product data improvement and reserve the right to change design and specifications without notice. We are committed to using environmentally conscious print practices.

RT-SVX23R-EN 22 Sep 2022
Supersedes RT-SVX23Q-EN (Apr 2020)

©2022