Billet® | K-28669-9

Pull-down kitchen sink faucet with two-function sprayhead

Features

- Two-function pull-down sprayhead with touch control allows you to switch between aerated and Sweep® sprays
- Sweep® spray features specially angled nozzles that form a wide, powerful blade of water to sweep your dishes and sink clean
- DockNetik® secure docking system locks sprayhead into place when not in use
- ProMotion® technology's light, quiet braided hose and swiveling ball joint make the pull-down sprayhead easier and more comfortable to use
- MasterClean™ sprayface features an easy-to-clean surface that withstands mineral buildup and maximizes spray performance
- High-arch spout offers vertical clearance for tall cookware and pitchers
- Single round handle makes adjusting water temperature easy with one hand
- Temperature memory allows faucet to be turned on and off at the temperature set during prior usage
- KOHLER ceramic disc valves exceed industry longevity standards by over two times, ensuring durable performance for life
- 1.5 gpm (5.7 lpm) maximum flow rate at 60 psi (4.14 bar)
- Coordinates with other products in the Billet™ collection



Available Colors/Finishes

Color tiles intended for reference only.

	CP	Polished Chrome
	SN	Vibrant Polished Nickel
	AF	Vibrant French Gold
	VS	Vibrant Stainless
	BV	Vibrant Brushed Bronze
	BL	Matte Black
	2MB	Vibrant Brushed Moderne Brass
	BMB	Matte Black with Brushed Moderne Brass
	TT	Vibrant Titanium

1-800-4KOHLER (1-800-456-4537)
Kohler Co. reserves the right to make revisions without notice to product specifications.
For the most current specification sheet, go to www.kohler.com USA or www.kohler.ca Canada.
4-22-2026 15:0 - US-CA

THE BOLD LOOK OF KOHLER®

Codes/Standards

ASME A112.18.1/CSA B125.1
NSF/ANSI/CAN 372
NSF/ANSI/CAN 61
DOE - Energy Policy Act 1992
California Energy Commission (CEC)

Technical Information

All product dimensions are nominal.

Handle

Handle Style/ Type:	Lever

Spout

Spout Reach:	9-3/16" (233 mm)

Flow Rate

Faucet Flow Rate:	1.5 gpm (5.7 l/min)

Material

- Premium metal construction for durability and reliability
- KOHLER finishes resist corrosion and tarnishing

Recommended Products/Accessories

K-28676 Beverage faucet

K-28679 Soap/lotion dispenser

K-28675-9 Single-handle bar sink faucet with two-function extended-reach spout and side sprayer

Warranty

See website for detailed warranty information.

KOHLER® Faucet Lifetime Limited Warranty

1-800-4KOHLER (1-800-456-4537)
Kohler Co. reserves the right to make revisions without notice to product specifications.
For the most current specification sheet, go to www.kohler.com USA or www.kohler.ca Canada.
4-22-2026 15:0 - US-CA

THE BOLD LOOK OF KOHLER.

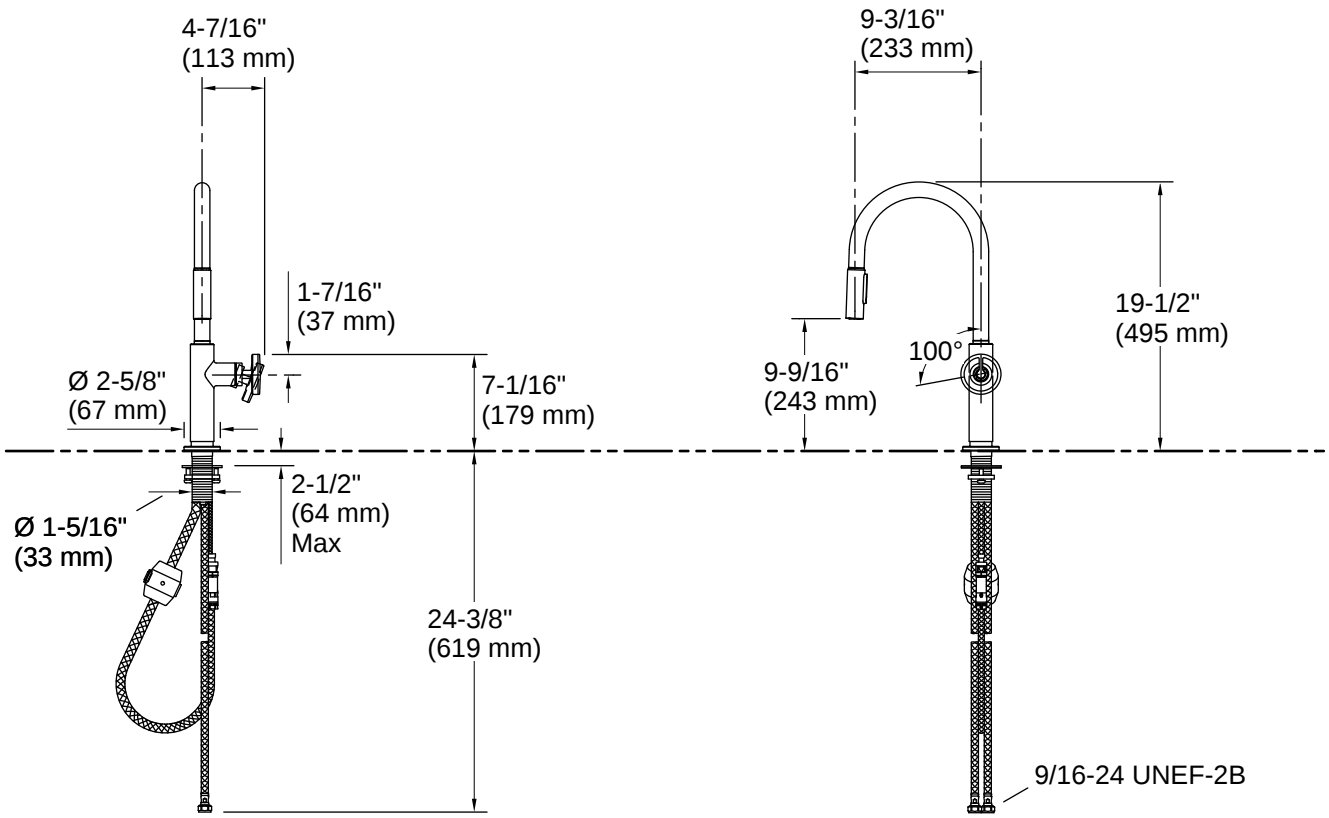

Installation

- For single-hole installation
- Flexible supply lines simplify installation

Installation Notes

Install this product according to the installation instructions.

1-800-4KOHLER (1-800-456-4537)
Kohler Co. reserves the right to make revisions without notice to product specifications.
For the most current specification sheet, go to www.kohler.com USA or www.kohler.ca Canada.
4-22-2026 15:0 - US-CA

THE BOLD LOOK OF KOHLER.