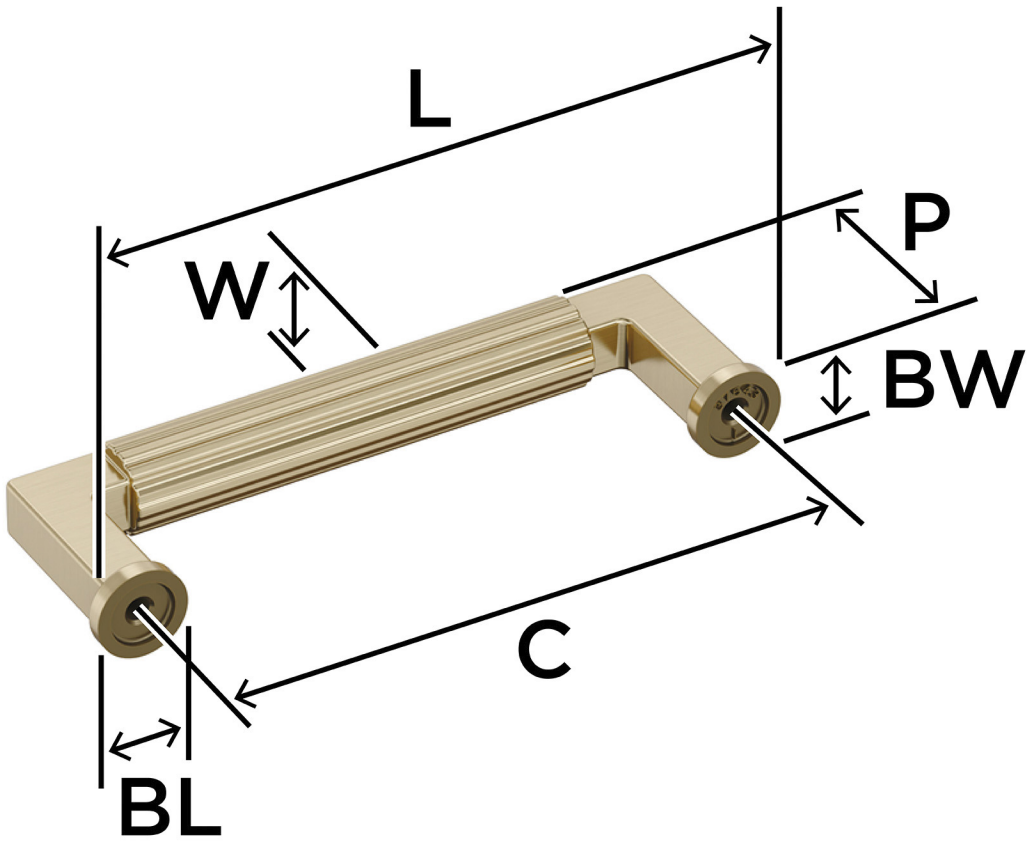

L (Length) = **4-5/16in**(110mm)

W (Width) = **9/16in**(14mm)

P (Projection) = **1-3/8in**(35mm)

C (Center-to-Center) = **3-3/4in**(96mm)

BL (Base Length) = **9/16in**(14mm)

BW (Base Width) = **9/16in**(14mm)