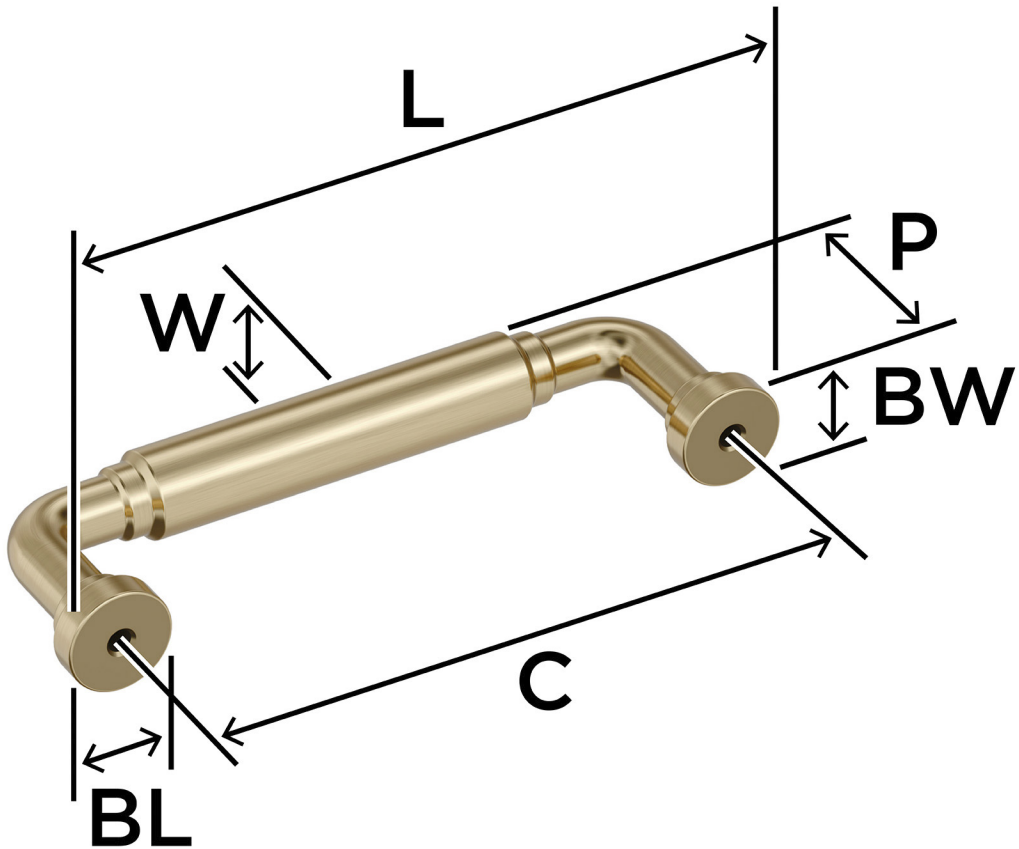

L (Length) = **4-3/8in**(111mm)

W (Width) = **1/2in**(13mm)

P (Projection) = **1-3/8in**(35mm)

C (Center-to-Center) = **3-3/4in**(96mm)

BL (Base Length) = **5/8in**(16mm)

BW (Base Width) = **5/8in**(16mm)