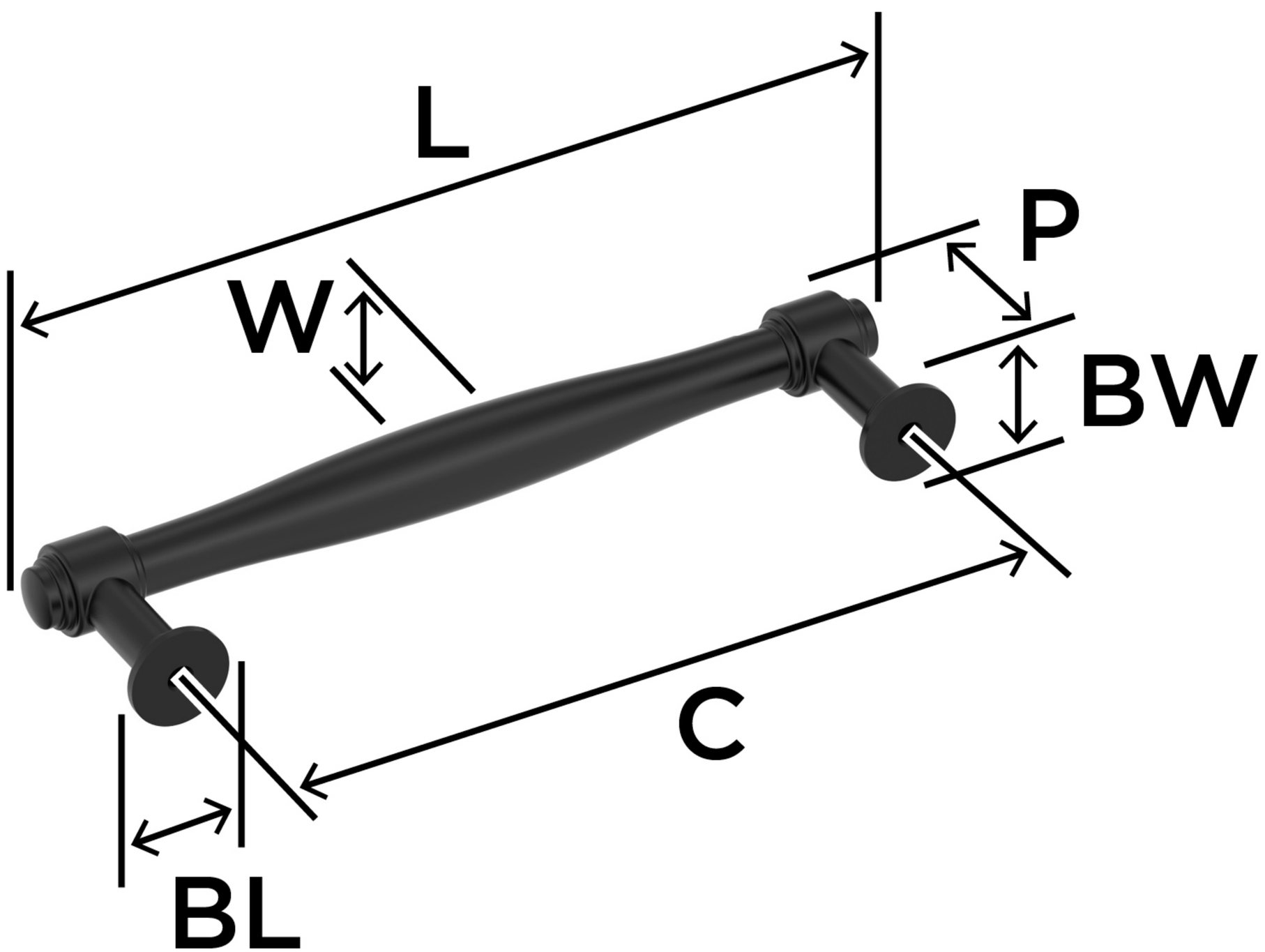

L (Length) = **5-13/16in**(148mm)

W (Width) = **9/16in**(14mm)

P (Projection) = **1-3/8in**(35mm)

C (Center-to-Center) = **5-1/16in**(128mm)

BL (Base Length) = **5/8in**(16mm)

BW (Base Width) = **5/8in**(16mm)