RHYME DOWNLIGHTS

Rhyme “Click Action” Downlights

The Rhyme series captures small aperture and low-profile together in a series of downlights available in trim or trimless style options and provides ease of installation through an innovative click-action mechanism.

- Click-action mechanism allows for quick and easy installation as well as maintenance suitable for remodel and new construction
- Each light module includes (1) mud-in trimless accessory and (1) trim accessory
- Aluminum housing with polycarbonate lens
- 5CCT Adjustable color temperature (2700K / 3000K / 3500K / 4000K / 5000K)
- Lumen output up to 1520 Lumens
- Dimmable with most TRIAC/ELV dimmers
- cETLus Listed for wet locations, JA8 Compliant, Type IC, Air-tight
- 50,000 hours rated life

Intertek · JA8 · WET LOCATION · AIR-TIGHT · TYPE IC · RoHS COMPLIANT · INDOOR RATED · DIMMABLE

PROJECT:
TYPE:
LOCATION:
CATALOG NUMBER:



RHYME DOWNLIGHT QUICK SPECS

VOLTAGE	120V AC, 60Hz
WATTAGE	12W (GIM) / 15W
LUMENS	Up to 1520Lm
CCT OPTIONS	5CCT (2700K / 3000K / 3500K / 4000K / 5000K)
CRI	90+
MOUNTING	Recessed mount
IP RATING	IP44
DIMMING	TRIAC/ELV (10 - 100%)
BEAM ANGLE	36° (GIM) / 24°-50° (ZOM) / 24°, 36°, 60° (THNC)
OPERATING TEMP	-20°C (-4°F) to 40°C (104°F)
CERTIFICATIONS	cETLus Listed, FCC, JA8, Indoor Wet Locations Air-Tight, Type IC, RoHS
RATED LIFE	50,000 Hours

Adjustable Beam Angle



Gimbal



Deep Baffle Round



Deep Baffle Square



RHYME DOWNLIGHT ORDERING INFORMATION

ITEM NUMBER	DESCRIPTION	FINISH	VOLTAGE	CCT	CRI	LM	WATTAGE
RHYM-DL3R-12-36-GIM-5CCT-WH	3” Round Eyeball Gimbal, TIR Lens, 36° Beam Angle	White	120V AC	5CCT	90+	1160 - 1250	12W
RHYM-DL3R-12-36-GIM-5CCT-BK	3” Round Eyeball Gimbal, TIR Lens, 36° Beam Angle	Black	120V AC	5CCT	90+	1090 - 1190	12W
RHYM-DL3R-15-2450-ZOM-5CCT-WH	3” Round Beam Angle Adjustable, TIR Lens, 24°-50° Beam Angle	White	120V AC	5CCT	90+	895 - 1160	15W
RHYM-DL3R-15-2450-ZOM-5CCT-BK	3” Round Beam Angle Adjustable, TIR Lens, 24°-50° Beam Angle	Black	120V AC	5CCT	90+	895 - 1150	15W
RHYM-DL3R-15-36-THNC-5CCT-WH	3” Round Deep Baffle w/ Honeycomb Louver, TIR Lens, 36° Beam Angle	White	120V AC	5CCT	90+	1305 - 1475	15W
RHYM-DL3R-15-36-THNC-5CCT-BK	3” Round Deep Baffle w/ Honeycomb Louver, TIR Lens, 36° Beam Angle	Black	120V AC	5CCT	90+	1185 - 1310	15W
RHYM-DL3Q-15-36-THNC-5CCT-WH	3” Square Deep Baffle w/ Honeycomb Louver, TIR Lens, 36° Beam Angle	White	120V AC	5CCT	90+	1330 - 1520	15W
RHYM-DL3Q-15-36-THNC-5CCT-BK	3” Square Deep Baffle w/ Honeycomb Louver, TIR Lens, 36° Beam Angle	Black	120V AC	5CCT	90+	1235 - 1350	15W

All Models Include	(1) Remote Driver / (1) Plastic Mudstopper Accessory
RHYME Gimbal Includes:	(1) Round Trimless Mud-Ring / (1) Round Trim-Ring
RHYME Adjustable Beam Includes:	(1) Round Trimless Mud-Ring / (1) Round Trim-Ring
RHYME Deep Baffle Round Includes:	(1) Round Trimless Mud-Ring / (1) Round Trim-Ring / (2) Field Adjustable Optics (24° and 60°) (Default is 36°)
RHYME Deep Baffle Square Includes:	(1) Square Trimless Mud-Ring / (1) Square Trim-Ring / (2) Field Adjustable Optics (24° and 60°) (Default is 36°)

©2025 American Lighting Inc. REV.2531

RHYME DOWNLIGHT ACCESSORY ORDERING INFORMATION

ITEM NUMBER	SIZE
RP-DL3-RHYM	3.62” Steel Rough-in Plate with Hanger Bars



RP-DL3-RHYM

RHYME DOWNLIGHT DIMENSIONS

EYEBALL GIMBAL

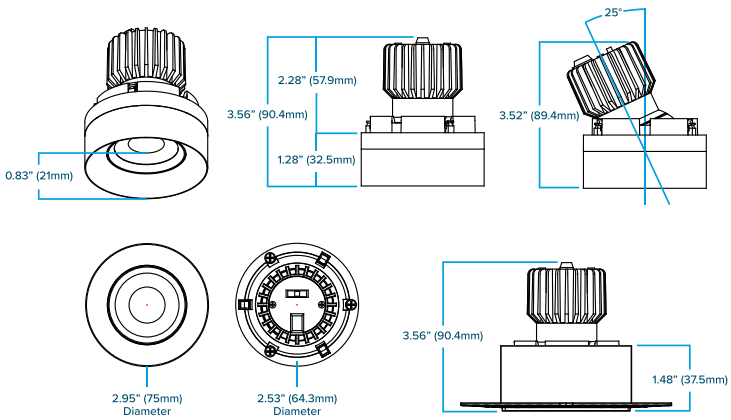

BEAM ANGLE ADJUSTABLE

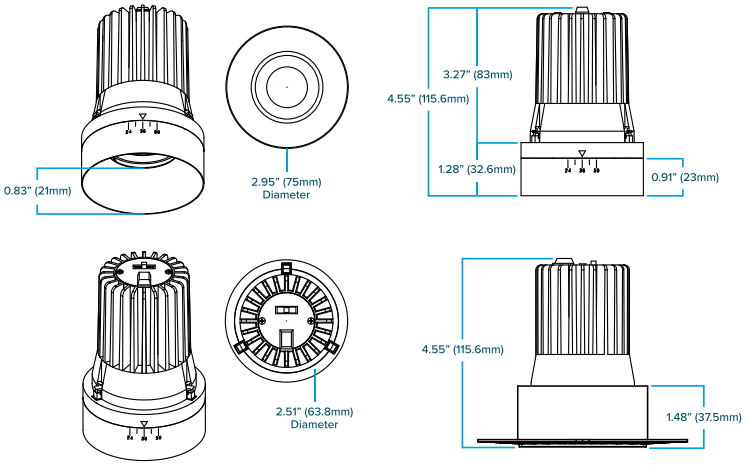

DEEP BAFFLE ROUND

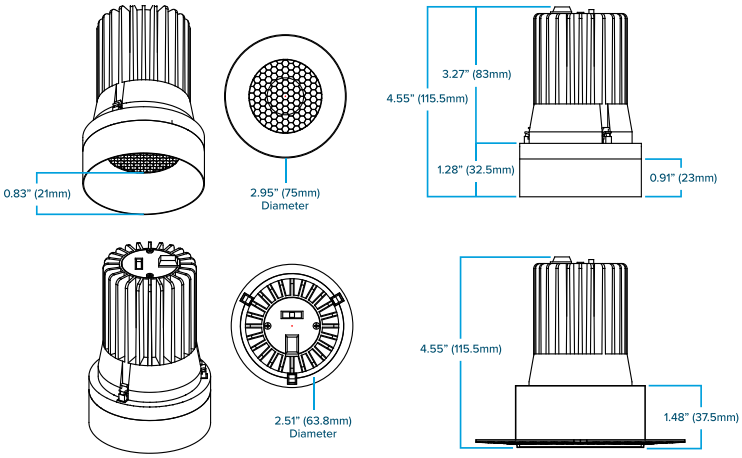

DEEP BAFFLE SQUARE

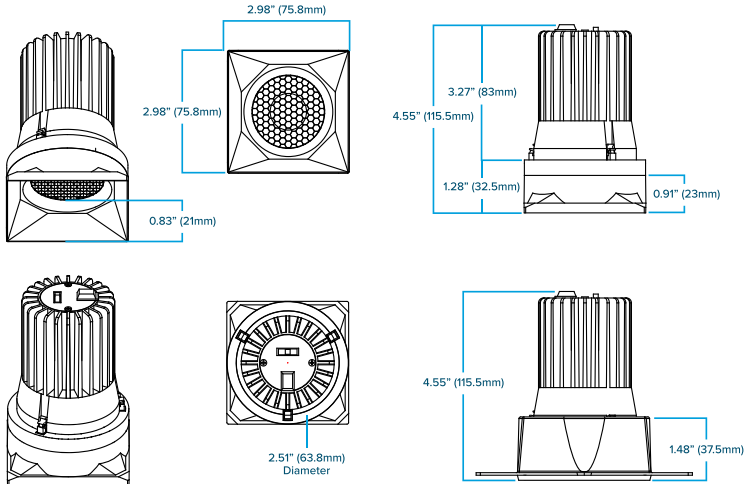

RHYME DOWNLIGHT DRIVER DIMENSIONS

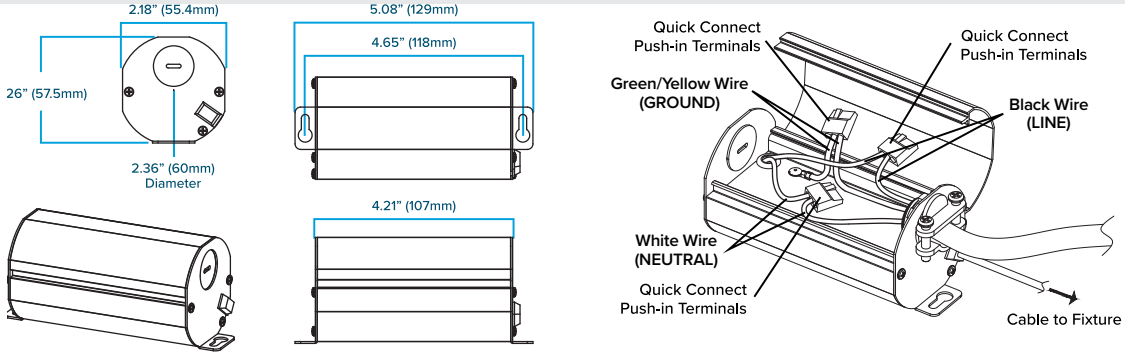

©2025 American Lighting Inc. REV.2531

RHYME DOWNLIGHT TRIMLESS MUD-RING & TRIM RING DIMENSIONS

TRIM RING - ROUND

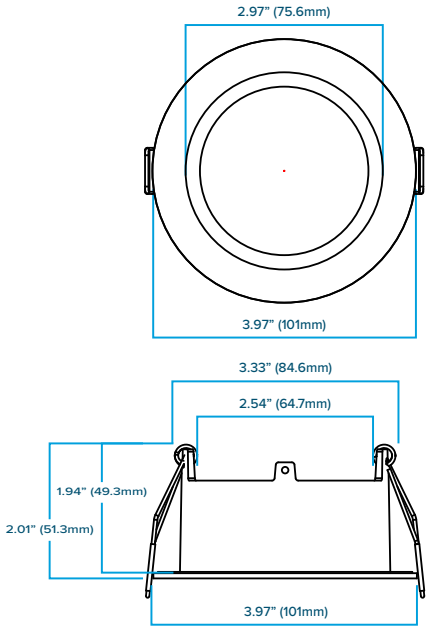

TRIM RING - SQUARE

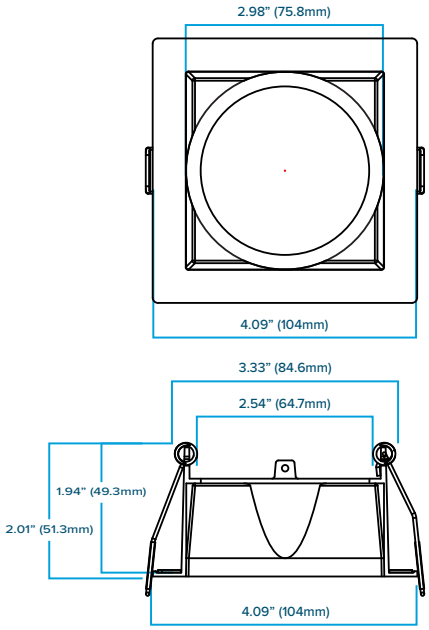

TRIMLESS MUD-IN - ROUND

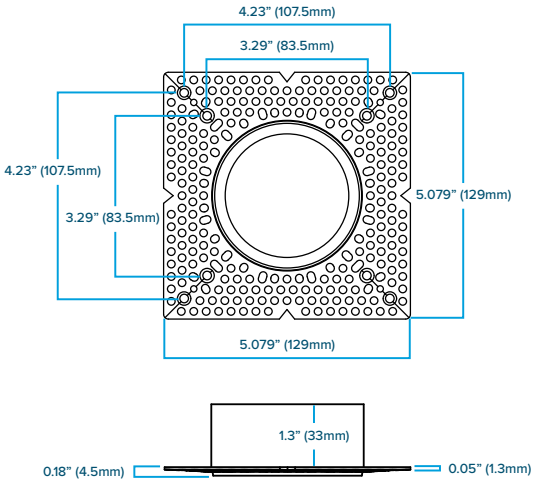

TRIMLESS MUD-IN - SQUARE

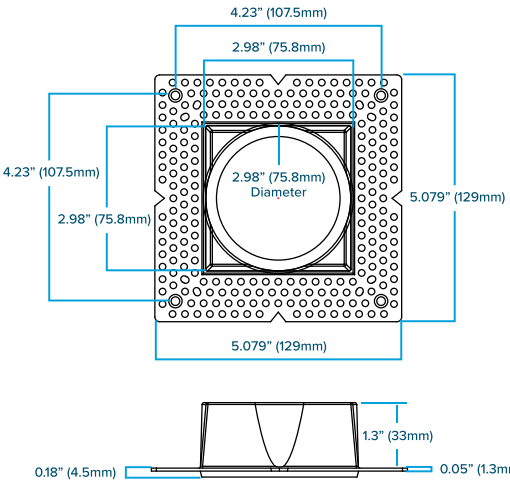

RHYME DOWNLIGHT IINSTALLATION

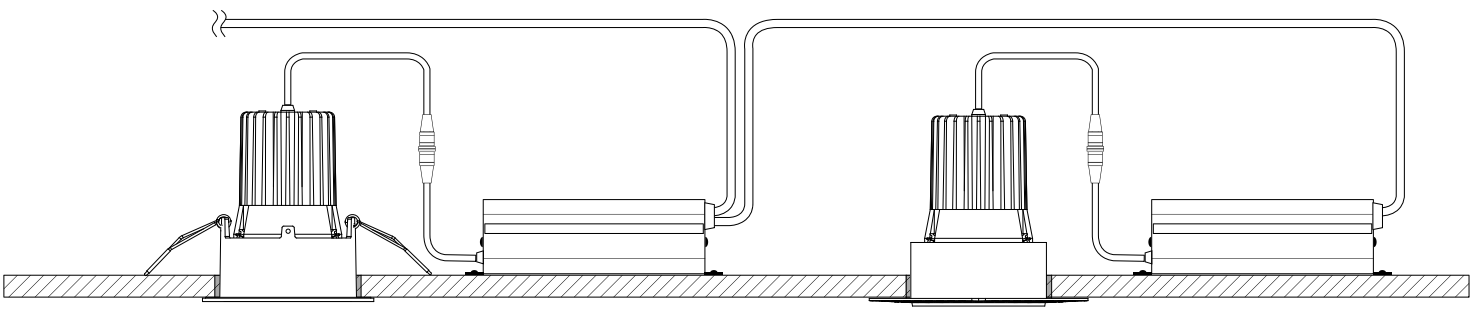

 ©2025 American Lighting Inc.

RHYME DOWNLIGHT PHOTOMETRICS

RHYM-DL3R-12-36-GIM

PART NUMBER	**RHYM-DL3R-12-36-GIM**
BEAM SPREAD	36°
LUMENS	1168.9
WATTAGE	12W
EFFICACY	97.4Lm per watt
CCT	3000K
CRI	90+

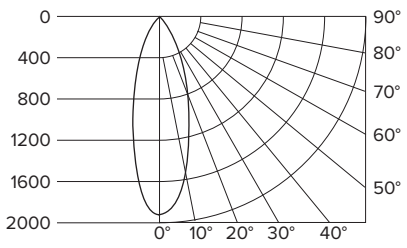

Avg. Foot Candles		Beam Dia.
141	5’	3.2’
97.9	6’	3.9’
70.9	7’	4.5’
55.1	8’	5.2’
43.5	9’	5.8’
35.2	10’	6.5’

Distance From Light

RHYM-DL3R-15-2450-ZOM

PART NUMBER	**RHYM-DL3R-15-2450-ZOM**
BEAM SPREAD	50°
LUMENS	1144
WATTAGE	15W
EFFICACY	76.26Lm per watt
CCT	3000K
CRI	90+

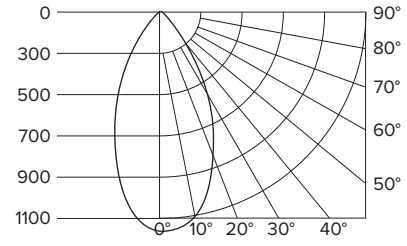

Avg. Foot Candles		Beam Dia.
67	5’	4.7’
46.5	6’	5.6’
34.2	7’	6.5’
26.2	8’	7.5’
20.7	9’	8.4’
16.7	10’	9.3’

Distance From Light

RHYM-DL3R-15-36-THNC

PART NUMBER	**RHYM-DL3R-15-36-THNC**
BEAM SPREAD	36° (Without Louver)
LUMENS	1397.8
WATTAGE	15W
EFFICACY	93.18Lm per watt
CCT	3000K
CRI	90+

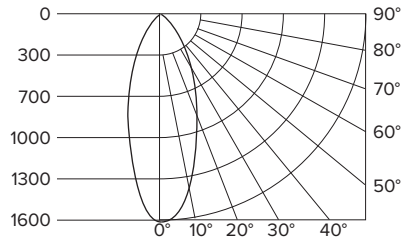

Avg. Foot Candles		Beam Dia.
168.6	5’	3.2’
117.1	6’	3.9’
86	7’	4.5’
65.9	8’	5.2’
52	9’	5.8’
42.1	10’	6.5’

Distance From Light

RHYM-DL3Q-15-36-THNC

PART NUMBER	**RHYM-DL3Q-15-36-THNC**
BEAM SPREAD	36° (Without Louver)
LUMENS	1387
WATTAGE	15W
EFFICACY	92.4Lm per watt
CCT	3000K
CRI	90+

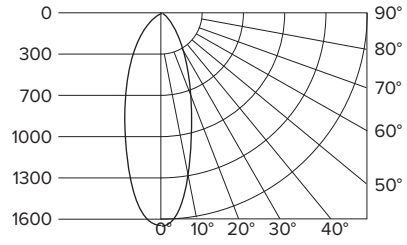

Avg. Foot Candles		Beam Dia.
167.3	5’	3.2’
116.2	6’	3.9’
85.3	7’	4.5’
65.3	8’	5.2’
51.6	9’	5.8’
41.8	10’	6.5’

Distance From Light

 ©2025 American Lighting Inc. REV.2531

RHYME DOWNLIGHT TM-30 DATA - 2700K

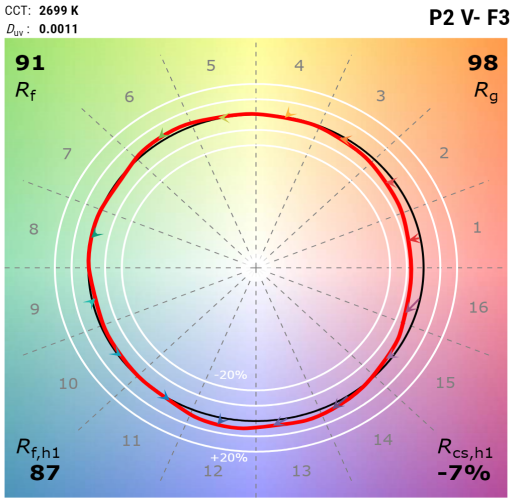

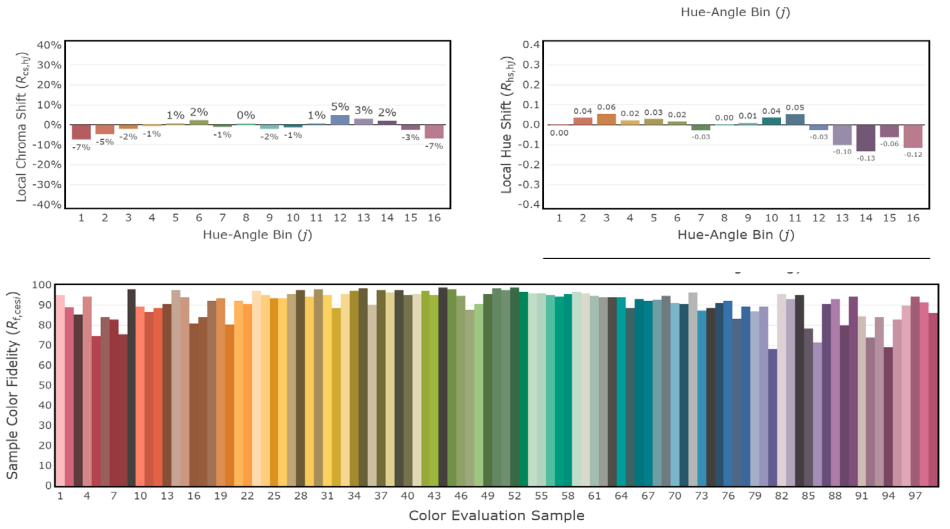

RHYME DOWNLIGHT TM-30 DATA - 3000K

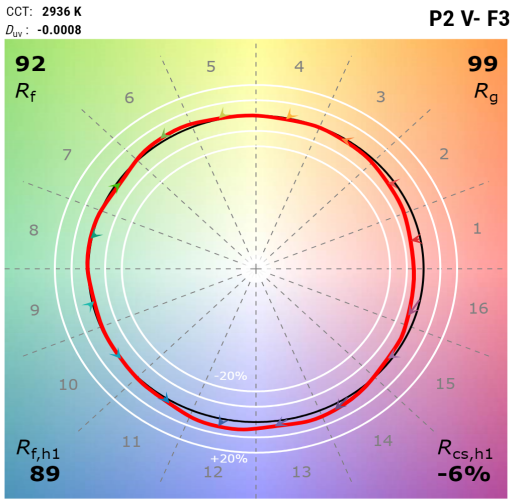

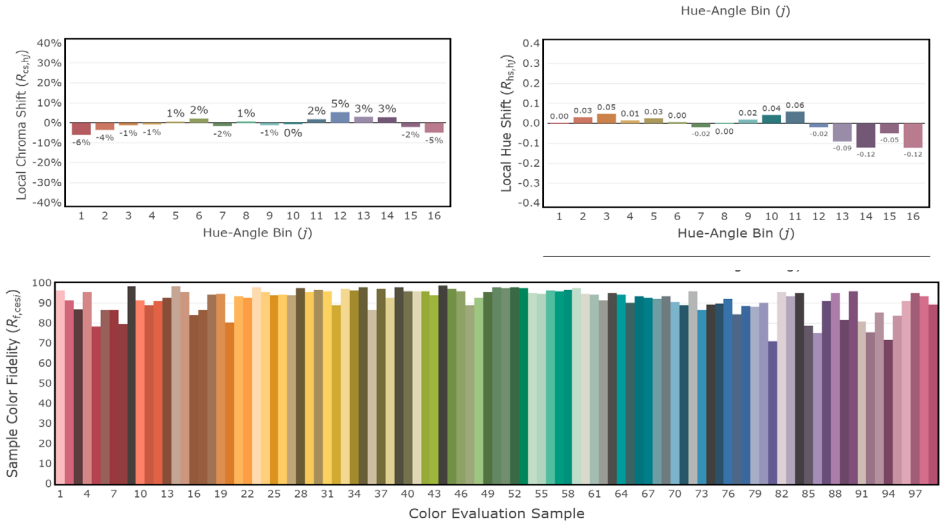

RHYME DOWNLIGHT TM-30 DATA - 3500K

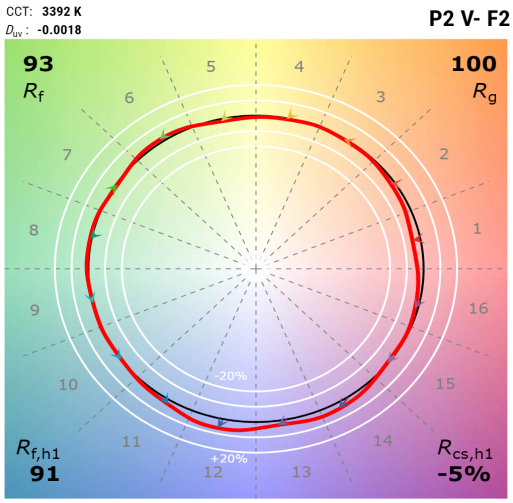

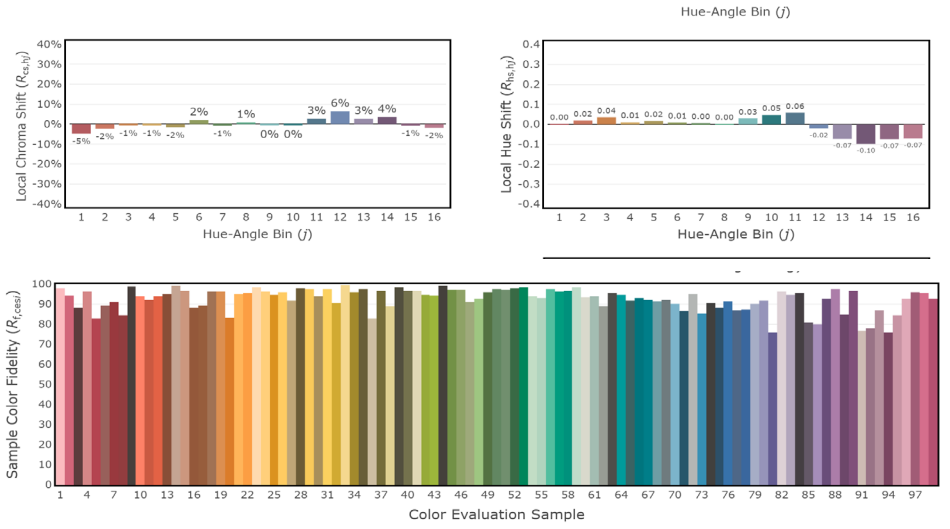

©2025 American Lighting Inc. REV.2531

RHYME DOWNLIGHT TM-30 DATA - 4000K

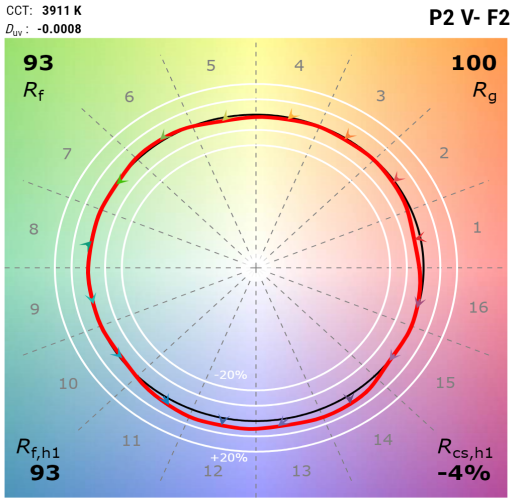

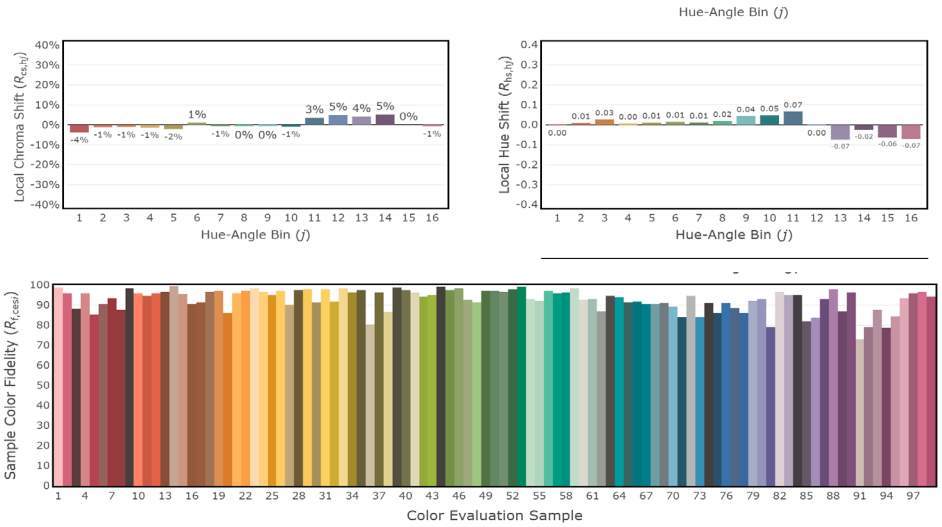

RHYME DOWNLIGHT TM-30 DATA - 5000K

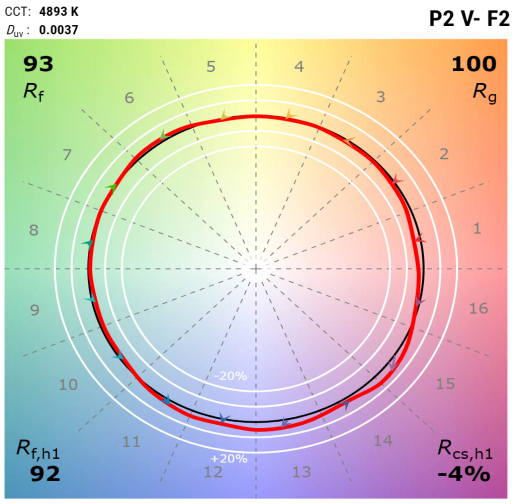

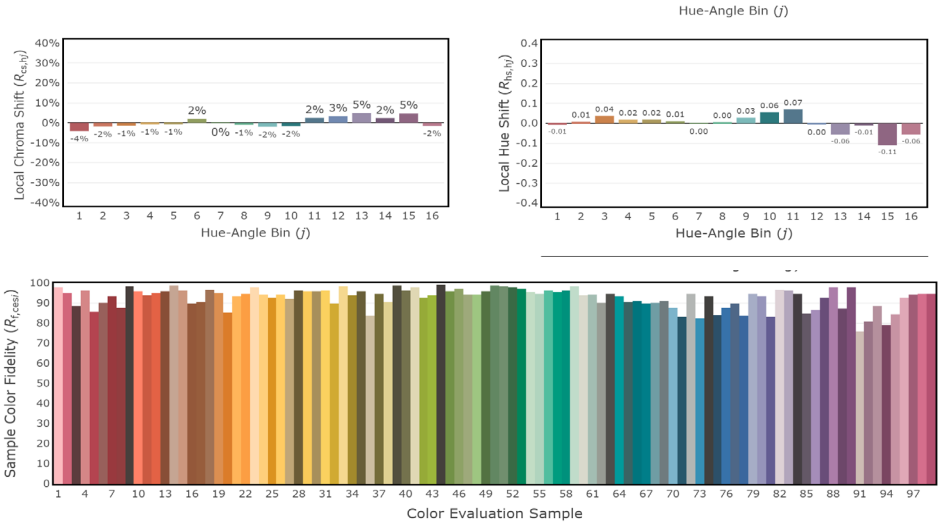

©2025 American Lighting Inc. REV.2531

RHYME DOWNLIGHT DIMMING CURVES

12W PHASE DIM RHYME

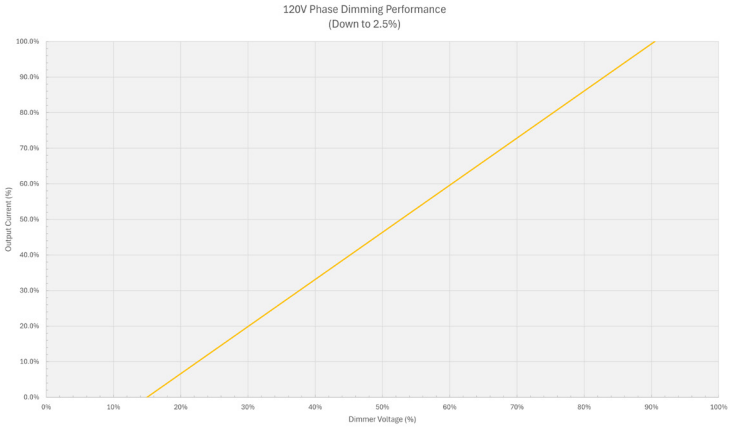

12W = GIM
0-10v: Dims to 3.2%
120-277V: Dims to 2.5%
*minor output desynchronization effects may occur amongst multiple fixtures wired together with 0-10V wiring under 5% output. Recommend to utilize low-end trim adjustments on the dimmer/controller to resolve any discrepancies that may occur in the field.

15W PHASE DIM RHYME

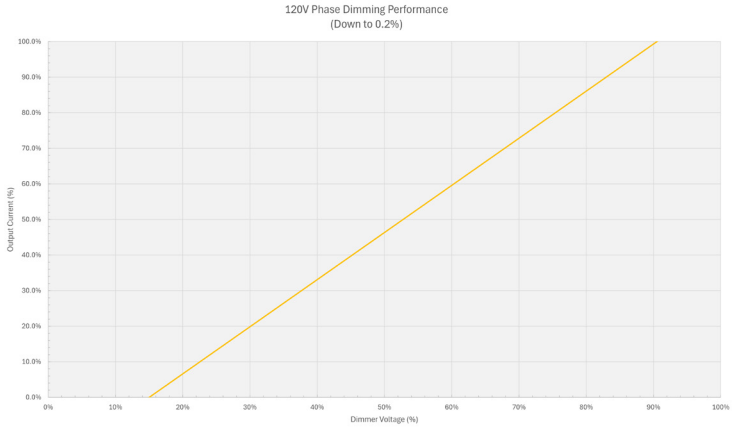

15W = ZOM, THNC
0-10v: Dims to 1.2%
120-277V: Dims to 0.2%
*minor output desynchronization effects may occur amongst multiple fixtures wired together with 0-10V wiring under 3% output. Recommend to utilize low-end trim adjustments on the dimmer/controller to resolve any discrepancies that may occur in the field.

RHYME DOWNLIGHT DIMMER COMPATIBILITY

BRAND	MODEL #	MAX CURRENT OUT (MA)	MIN CURRENT IN (MA)	MIN DIMMING RANGE (%)
Leviton	RNL06	325	1	0.31%
Leviton	RDL06	326	1	0.31%
Leviton	DDE06	323	12	3.67%
Leviton	DH6HD	324	1	0.31%
Leviton	DSL06	324	1	0.31%
Leviton	DW1KD	323	1	0.31%
Leviton	DDMX1	326	1	0.31%
Lutron	PD-6WCL	1	1	0.31%
Lutron	MRF2-6CL	1	28	0.31%
Lutron	SCL-153P	0	25	0.00%
Lutron	MSCL-OP153M	1	38	0.31%
Lutron	PD-10NXD	1	7	0.31%
Lutron	DVRP-253P	1	22	0.31%
Lutron	DVCL-253P	0	22	0.00%
Lutron	PD-5NE	6	4	1.83%
Lutron	NTCL-250	1	5	0.31%
Lutron	MACL-153M	1	22	0.31%

Dimmer performance may vary in field application due to unknown external factors. Dimmers not included on the chart above are not necessarily incompatible; they have yet to be fully evaluated. Please reference dimmer manufacturer's instructions for more detailed information regarding performance and compatibility. Test data listed above is based on single lamp data.

©2025 American Lighting Inc. REV.2531

AMERICAN LIGHTING WARRANTY

LIMITED WARRANTY FOR LED PRODUCTS: 5 YEARS

AVERAGE LIFE

Average incandescent lamp life, rated life and average life are terms used to describe the number of hours at which half of the lamps have failed. For LEDs, the hours of rated life specify the point at which 70% of original lumen output is reached. Below this point, the effective life is over, however, the LED may still emit light. Individual results may vary with actual environmental conditions including, but not limited to, proper installation, ambient temperature and/or input voltage fluctuations.

Warranty life based on average 8 hours/day use, 7 days/week. Product should be cycled off for at least 6 hours per day.

SAFETY

You must disconnect lighting products from the power supply before servicing or replacing bulbs. Only qualified personnel should install and perform service on lighting products. Periodic inspection and maintenance is required to keep equipment operating properly and at peak performance. Do not mount fixtures on or adjacent to combustible materials.

Lighting products may present a possible shock or fire hazard if improperly installed or attached in any way. Products should always be installed in accordance with their instruction manuals, current electrical codes, and/or the current National Electric Code (NEC). Code compliance is the sole responsibility of the person, company, or party performing the installation of product. Failure to comply with national and/or regional safety codes may result in hazardous or dangerous conditions, damage to property or life, and/or altered product performance/specifications.

LIMITED PRODUCT WARRANTY

Our products are warranted to be free from defects in material and workmanship for the warranty period listed on the reverse by product category. Warranty periods begin from the date of shipment from American Lighting Inc's warehouse to the original purchaser. Products that prove to be defective during their specific warranty period will be either repaired or replaced, at the sole discretion of American Lighting Inc. Claims for defective products must be submitted in writing to American Lighting Inc's RGA Department within the warranty period. Upon approval of such return, American Lighting Inc reserves the right to inspect the product for misuse or abuse. Claims for indirect or consequential damages or for any product that, in American Lighting Inc's opinion, has been misused will be denied. This is a warranty of product reliability only and not a warranty of merchantability or fitness for a particular purpose. American Lighting Inc shall have no liability whatsoever in any event for payment of incidental or consequential damages, including, without limitations, installation costs and/or damages for personal injury and/or property. These products may represent a possible shock or fire hazard if improperly installed or altered in any way. This warranty does not apply to any product that has not been properly installed in accordance with current local codes and/or the National Electrical Code. Products that require a transformer, driver or power supply must be used in conjunction with American Lighting Inc's recommended power supply to ensure safety and retain product warranty. Limited Product Warranty applies to lengths up to 75 feet for rope light products.

STANDARD LINEAR WARRANTY

Rope light and linear lighting products in all their various types and shapes, whether LED or incandescent, are wired in series parallel. This means that several individual lamps or LEDs are wired together in series to equal 12V, 24V or 120V. Then these sections are wired together (in parallel) to light up in unison. If one solder joint, lamp or resistor fails, a whole section will not light. Due to the number of elements involved, and the numerous extenuating circumstances beyond our control, American Lighting Inc offers a Standard Linear Warranty on most linear lighting products. The limited liability warranty is listed above, however the Standard Linear Warranty offers replacement product by section due to defective material and/or workmanship for one year beginning from the date of shipment from American Lighting Inc's warehouse to the original purchaser.

USE OF LINEAR LIGHTING IN OUTDOOR APPLICATIONS

Incandescent rope light and LED Flexbrite UL 2388 custom cuts; incandescent and LED Flexbrite pre-packaged kits; and UL Listed (special order) cuts of LED Neon Flexbrite Plus and Economy have factory assembled power connections and end caps that seal the rope from moisture. Due to strict quality control standards, American Lighting is able to offer a limited warranty on these items rather than the standard linear lighting warranty that replaces product by defective section only. For outdoor applications, best practices include using kits interconnected (same length kits are best for color control of White LED Flexbrite) or using custom cuts that do not exceed 75 feet.

For all linear lighting categories, any non-rated field connection made in an outdoor application should be properly sealed with dielectric grease covering all conductive materials; and properly installed power connections and end caps, sealed with dialectric grease, silicone, and heat shrink tube. However, since non-rated (field executed) power connections of linear lighting products cannot be quality controlled, and outdoor use of non-rated product is not recommended, American Lighting cannot warrant the product to any purchaser.

PRODUCT SPECIFICATIONS

For the latest product information, updates, instructions and details concerning specifications, colors, finishes, performance, installation and design, visit www.americanlighting.com. Color may vary from the color printed herein due to limitations in photographic and printing processes. American Lighting Inc. reserves the right to change product specifications without notice. Other product specifications such as color temperature, wavelength characteristics and lumen output are subject to production limitations and may vary.

LED technology is changing rapidly, and not all color temperatures and performance levels can be duplicated at a later time.

Best practices include purchasing 10-15% additional product for a project on the same initial order where white LED color temperatures must be maintained over project and product life. Eventual product replacement should be considered at layout and design stages. Best practices also include testing connections and product performance prior to mounting and/or installing.

 ©2025 American Lighting Inc. REV.2531