Owner's Manual

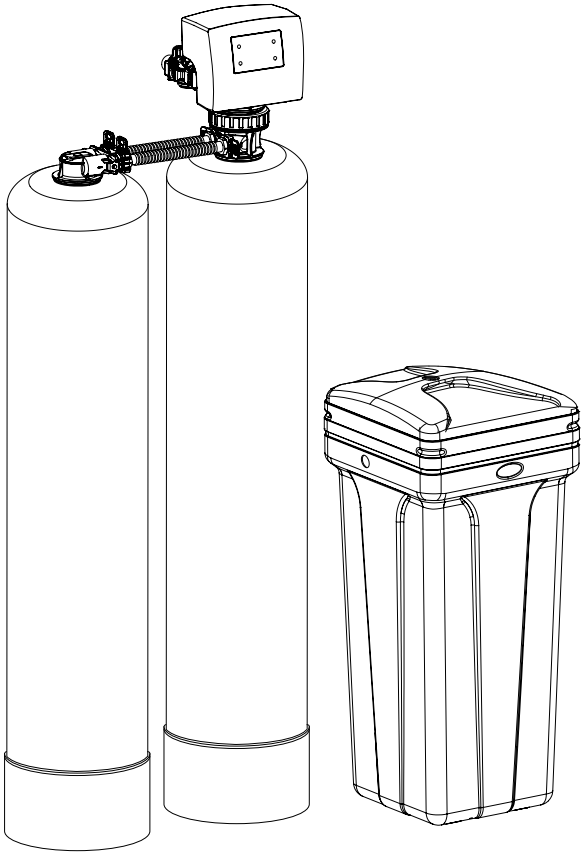

Certified by IAPMO R&T against NSF/ANSI 42, 44, 372 and CSA B483.1

89UF Dual Media Tank

Specialty System Manual

1. **This manual contains important safety and operating instructions. Read all instructions and follow them when using this product. Failure to consider this information and follow these instructions, including those concerning maintenance, may result in property damage, injury and or death.**

   Page 27 of this manual contains important maintenance procedures for the continued proper operation of your unit. These MUST be performed regularly for your warranty to remain valid.
2. We recommend installation only be completed by a competent installer or plumbing professional to insure this product is installed in accordance with local plumbing codes.
3. Read this manual in full and follow all instructions carefully before operation.
4. Avoid pinched O-rings during installation by applying NSF certified lubricant to all seals (provided with install kit).
5. This system is not intended for treating water that is microbiologically unsafe or of unknown quality without adequate disinfection before or after the system.
6. Discard small parts remaining after the installation.
7. Failure to install the system correctly voids the warranty.
8. Handle all components of the system with care. Do not drop, drag or turn components upside down.
9. Save these instructions and keep track of your product's serial number.

NOTICE: THIS MANUAL CONTAINS A LIMITED WARRANTY. BY INSTALLING AND OR USING THIS PRODUCT, YOU WAIVE CERTAIN LEGAL RIGHTS INCLUDING THE RIGHT TO SUE OR CLAIM COMPENSATION IN THE EVENT OF PROPERTY DAMAGE, INJURY, AND OR DEATH.

Canature WaterGroup Canada Inc.
855 Park St., Unit 1
Regina, SK, S4N 6M1
www.canaturewg.com

Canature WaterGroup U.S.A. Inc.
6353 Commerce Drive
Whitestown, IN, 46075
www.canaturewg.com

Table of Contents

SAFETY	3
FIND AND RECORD VALVE TYPE & SERIAL NUMBERS	4
RECORDS & CONTACTS	4
KNOW THIS BEFORE STARTING YOUR INSTALLATION	5
HOW YOUR WATER CONDITIONER WORKS	6
FEATURES & TERMINOLOGY	6
FLOW RATE INFORMATION	7
FEED WATER PARAMETERS	7
UNPACKING/INSPECTION	8
BEFORE INSTALLATION	9
PREPARATIONS	10
PLANNING YOUR INSTALLATION	14
INSTALLATION STEPS	16
UNDERSTAND THE SCREEN & KEYPAD CONFIGURATION	18
START-UP INSTRUCTIONS	19
OTHER MAIN MENU FEATURES	22
PROBLEM WATER INJECTOR KIT	25
PLUMBING SYSTEM CLEAN UP	26
SANITIZATION PROCEDURE	27
SYSTEM MAINTENANCE	27
SERVICING YOUR CONTROL VALVE	30
TROUBLESHOOTING GUIDE	33
COMMON SPARE PARTS	35
WARRANTY	36

SAFETY

Throughout this manual, certain conventions are used, including;

HAZARD SYMBOLS	
	For your own safety, please pay strict attention! Examples include: temperature, electrical, and water pressure, etc.
HAZARD SIGNALS	
DANGER	Indicates a hazardous situation that, if not avoided will result in death or serious injury, and/or property loss or damage.
WARNING	Indicates a hazardous situation that, if not avoided may result in death or serious injury, and/or property loss or damage.
CAUTION	Indicates a hazardous situation that, if not avoided, could result in a minor or moderate injury, and/or property loss or damage
NOTICE	Indicates important information, that if not followed may result in damage to equipment, or property loss.
WARRANTY EXCLUSIONS	
	Identify specific instructions that, if not followed, will void the warranty. The warranty provided gives you specific legal rights and otherwise limits your legal rights to the extent permitted by law. By installing and/or using this product, you are accepting these limits on your legal rights.
NOTES	
NOTE	Help you take full advantage of the system and are used to emphasize installation, operation, or maintenance information that is important but does not present a hazard.
MANDATORY SIGNS	
	Used to depict a specific behavior that MUST be followed to avoid the present hazard (problem).

Canature WaterGroup U.S.A. Inc. / Canature WaterGroup Canada Inc. ("Canature") has disclosed all known risks associated with the product within this manual but cannot disclose risks that are beyond its knowledge.

Original instructions. All information, illustrations, and specifications in this manual are based on the latest information available at the time of the publication.

The right is reserved to make changes at any time without notice.

COPYRIGHT © 2026
Canature WaterGroup™
All rights reserved.

FIND AND RECORD VALVE TYPE & SERIAL NUMBERS

There are two labels located on your Unit: **1)** Control valve label and **2)** System number label. Find and record your product model number, serial number, and valve serial number in the **Records & Contacts** section as they will be important if you need to troubleshoot.

Control Valve Serial #

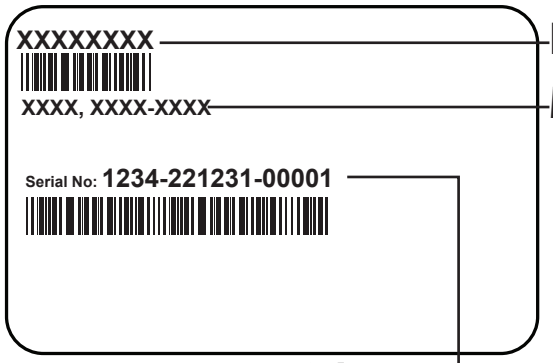

Item #

Model #

System Serial #

NOTE

Do NOT remove or destroy the serial number. It MUST be referenced on request for warranty repair or replacement.

RECORDS & CONTACTS

Please have the information below filled out and available when calling in for parts or warranty:

YOUR DEALER:
Name:
Address:
Phone:
Other:
YOUR SYSTEM:
Model number:
Serial number:
Valve Serial number:
Date installed:
Installed by:
NOTES:

KNOW THIS BEFORE STARTING YOUR INSTALLATION

- Read this manual thoroughly to become familiar with the conditioner and its capabilities before installing or operating.

Failure to follow instructions could result in personal injury, property damage or death.

This manual will assist you in getting the most out of your new conditioner.

- The installation of this conditioner MUST be in accordance with all electrical and plumbing authorities, as well as all applicable local codes and ordinances.

Check with your local public works department for plumbing and sanitation codes.

In the event that the codes conflict with any content in this manual – the local codes should be followed.

Installation by a licensed plumber or certified water treatment professional is recommended.

- This conditioner is designed to operate on pressures of 30 -125 psi.

If the water pressure is higher than 125 psi, use a pressure reducing valve ahead of this conditioner.

- It is not uncommon for sediment, precipitated iron, or hardness to be present in water supplies.

Precipitated minerals or sediment can cause damage to the seals and piston.

If precipitated minerals or sediment are present in your water supply this will be considered a harsh environment. The seals and piston would not be covered by warranty, stated or otherwise.

- Do NOT use water that is microbiologically unsafe without adequate disinfection before or after this system.

- This conditioner is capable of operating at temperatures between 4 °C – 43 °C or (40 °F -110 °F).

Do NOT expose conditioner to freezing temperatures or vacuum.

Discharge lines exposed to freezing temperatures should be positioned with a downward slope.

- Do NOT expose conditioner to direct sunlight.

- Do not use this conditioner on hot water supply lines.

- Avoid pinched O-rings during installation by applying the silicone-based lubricant supplied. Part #92360.

- It is recommended to inspect and service the control valve on an annual basis.

Cleaning and or replacement of piston, seals, and or spacers may be necessary depending on the raw water quality.

Your installer can provide a maintenance kit for this purpose.

- Rural applications should have a water analysis annually prior to system checkup or repair.

- Chlorine bleach and common iron control chemicals may generate toxic fumes when mixed.

- Always wear appropriate safety gear, such as safety glasses.

NOTICE

The warranty provided gives you specific legal rights and otherwise limits your legal rights to the extent permitted by law. By installing and/or using this product, you are accepting these limits on your legal rights. Canature is NOT responsible for losses, injury, or death resulting from a failure to observe these safety precautions, or misuse or abuse of the equipment.

NOTE

Check with your local public works department for applicable local plumbing and sanitation codes. Follow local codes if they differ from the standards used in this manual. Otherwise, carefully follow the instructions in this manual. Canature is not liable for any non-compliance with local requirements

NOTE

HTO, HEDP, HNU models

See **Start-Up Instructions - Problem Water Injector Kit** if you have iron in your water and are installing an upflow water conditioner.

HOW YOUR WATER CONDITIONER WORKS

Water conditioners remove problem minerals (calcium and manganese) causing hardness, from your water by exchanging them with harmless sodium ions in a process called ion exchange. Unlike calcium and magnesium, sodium does not form scaling. Sodium also does not interfere with the cleaning action of soaps. Resin beads charged with sodium ions release the sodium and exchange them with the hardness ions. The resin beads and the conditioner must be regenerated as these ions are exchanged and are used up.

Regeneration is accomplished by rinsing the resin with a saturated brine solution that removes the calcium and magnesium from the resin bead while replenishing the sodium. This is why the conditioner requires a brine tank and salt. The water conditioner will provide soft water for several days before needing to be regenerated when sized correctly for your application. Your system measures the amount of water used to determine when regeneration is required.

This conditioner is equipped with an internal automatic bypass which will allow for untreated water to bypass the unit during a regeneration so the home will not be without water during this period. Regeneration time is factory set for 2:00 a.m. to minimize the chance of untreated water getting into your system during regeneration. Please try to avoid use of water during this time period or adjust the regeneration time to a suitable time period when water use is at its minimum. Use of water during the regeneration time will result in hard untreated water being used.

FEATURES & TERMINOLOGY

Flow Rate
It will only display if treated water is running, otherwise, it will read zero (0).

Date and Time
The current date and time are always displayed.

Remaining Gallons
The total amount of soft water the system can produce before the next regeneration.

Capacity Gallons
Total capacity of system from last regeneration.

Precision Brining
Precision brining means that your conditioner calculates the exact amount of brine required to regenerate. This saves up to 30% more salt. **Upflow units only**.

Brine Pre-Fill%
This is the percentage of the water that will be added to the brine tank after a regeneration. The default is 70%.

Variable Reserve Brining
The remaining amount of water will be added just prior to the regeneration and will be proportional to the amount of capacity left in the system. **Upflow units only**.

Manual Delayed Regeneration
Generally, used after servicing the valve so that it will regenerate at a standard pre-set time.

Adjustable Backwash
Using a clean municipal water supply, there is no need to backwash and clean the bed with every regeneration. The 89 valve saves a significant amount of water by skipping up to ten (10) backwash cycles.

Soft Water Brine Tank Refill
Conserves capacity and keeps the brine tank cleaner by adding only treated soft water to the brine tank rather than raw untreated hard water.

Regen Time
Time of day that the conditioner is scheduled to regenerate.

Salt Reminder
A feature that will provide both a visual and audible alarm based on the salt consumption settings.

System Bypass
All systems come with a manual bypass valve which allows you to bypass the 89 valve. This allows raw untreated water to be used in your home for any reason, including system servicing.

Usage History & General Diagnostics
This can be accessed in the Advanced Programming in the Service Manual.

Total Regenerations
The total number of times the conditioner has regenerated.

Historical Total Gallons
Total gallons treated by the conditioner.

Hardness
This can be adjusted seasonally if needed. The installer usually sets this for the worst case scenario, where water hardness fluctuates.

Emergency Regen
When set to **ON**, the system will start a forced regeneration when the remaining capacity reaches 3%. The regeneration consists of 8 minutes of Brine and 12 minutes of Rinse. The 20 minutes regeneration will restore up to 33% of the system capacity. At the next regeneration time (2:00 AM), the system will automatically perform a standard regeneration to restore capacity to 100%.

Dealer Contact Information
Is displayed when available.

FLOW RATE INFORMATION

At the stated service flow rates, the pressure drop through these devices will not exceed 15 psig.

Peak flow rates are intended for intermittent use only (10 minutes or less) and are for residential applications only. Do not use peak flow rate for commercial applications or for a continuous rate when treated water supplies are geothermal heat pump, swimming pool, etc.

For satisfactory operation, the pumping rate of the well system must equal or exceed indicated backwash flow rate.

FEED WATER PARAMETERS

HEDP
Hardness = > 75 gpg
Maximum Iron = Max 2 ppm ferrous
Maximum Manganese = 0.75 ppm
Maximum Hydrogen Sulfide = 0.0 ppm
Maximum TDS = 2000 ppm
pH = 6.5 to 7.5

HTO/HTOK
Maximum Hardness = 75 gpg
Maximum Iron = Max 2 ppm ferrous
Maximum Manganese = 0.75 ppm
Maximum Hydrogen Sulfide = 0.0 ppm
Maximum TDS = 2000 ppm
pH = 7.0 to 8.0

SIMTAN/HIMTLC
Maximum Hardness = 75 gpg
Maximum Iron = Max 10.0 ppm Total with of pH < 7.2
Maximum Manganese = 0.75 ppm
Maximum Hydrogen Sulfide = 0.0 ppm
Maximum TDS = 1500 ppm
pH = 6.5 to 7.2
Maximum Tannin = 3.0 ppm
Maximum Sulphates = < 500 ppm

SIMNU
Maximum Hardness = 75 gpg
Maximum Iron = Max 10.0 ppm Total with of pH < 7.2
Maximum Manganese = 0.75 ppm
Maximum Hydrogen Sulfide = 0.0 ppm
Maximum TDS = 2000 ppm
pH = 6.5 to 7.0

HNU
Maximum Hardness = 75 gpg
Maximum Iron = 0.0 ppm
Maximum Manganese = 0.0 ppm
Maximum Hydrogen Sulfide = 0.0 ppm
Maximum TDS = > 200 ppm
pH = 6.5 to 7.0

NOTE

HTO, HNU models
See **Start-Up Instructions - Problem Water Injector Kit** if you have iron in your water and are installing an upflow water conditioner.

UNPACKING/INSPECTION

Be sure to check the entire unit for any shipping damage or parts loss. Also note damage to the shipping cartons. Contact the transportation company for all damage and loss claims. **The manufacturer is not responsible for damages in transit**.

Small parts, needed to install the conditioner, are in a parts box. To avoid loss of the small parts, keep them in the parts box until you are ready to use them.

What is included in the box?

For Models HTO-100, HTO-150 and HTO-200, you will expect the following.
Shipping Carton Quantity – 2

1. Control Valve
2. Tank 1 c/w Parallel Adaptor
3. Parts Box
4. Owners Manual
5. Drain Hose & Clamp (Not included in some brands)
6. Parts Bag
7. Tank 2 c/ Adaptor

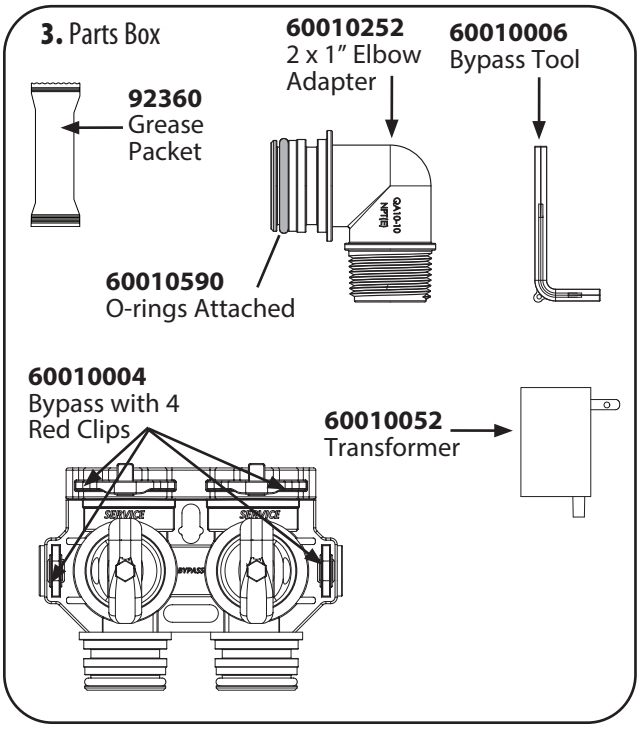

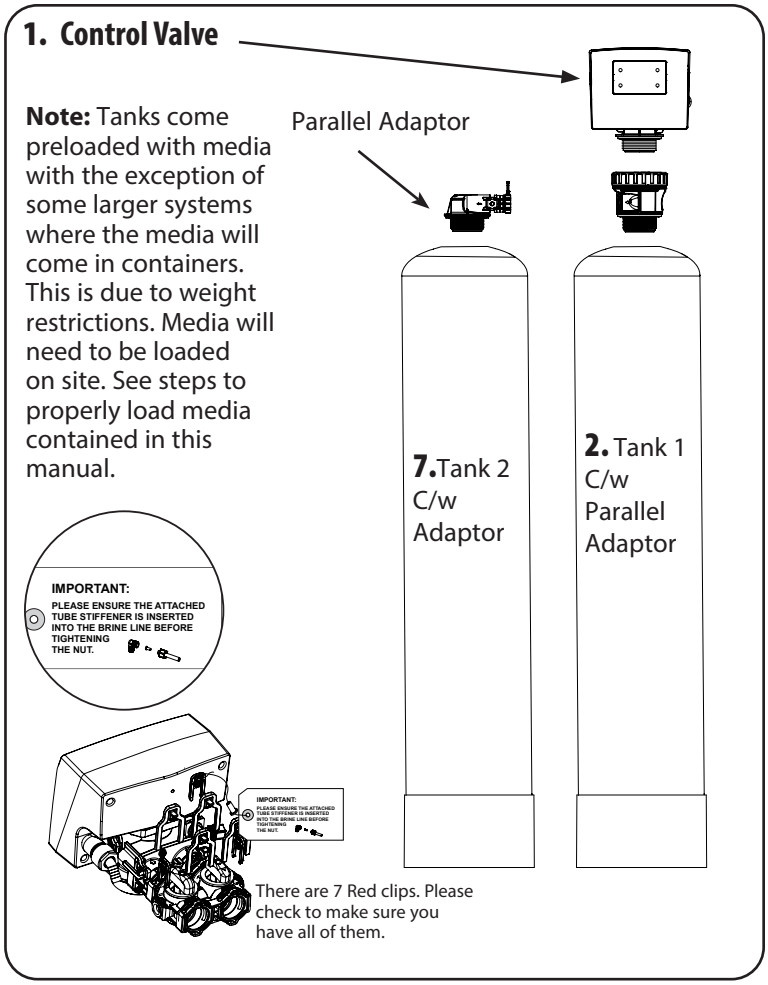

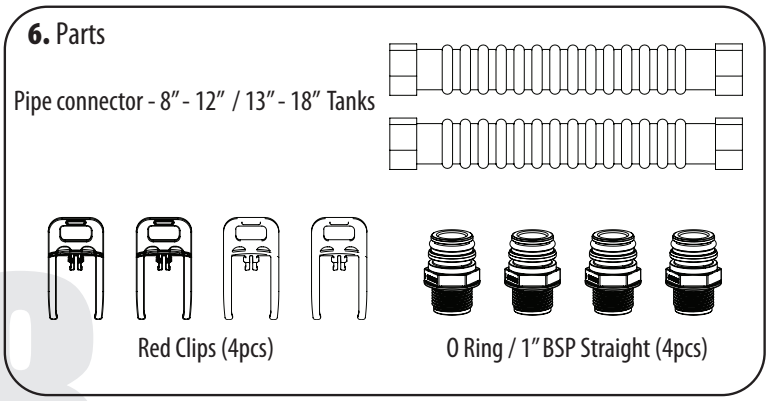

NOTE

Due to transportation and climatic conditions, all connections, including the valve to the tank, need to be checked at time of installation and hand tightened, where necessary.

NOTE

Canature is NOT responsible for damages in transit.

WARNING

RISK OF CHOKING
Discard all leftover parts and packaging materials after installation. Small parts could be a choking hazard.

BEFORE INSTALLATION

Make sure you have a copy of your most recent water test results. If your water has not been tested previously, your professional installer can obtain a water sample bottle to be sent to one of our facilities for a free analysis. **It is important that this product not be installed until you have this information**.

In all cases where metal pipe was originally used and is later interrupted by poly pipe, or the Noryl bypass valve, an approved ground clamp with physical separation and no less than #6 copper conductor must be used for continuity, to maintain proper metallic pipe bonding.

Fig. 1.

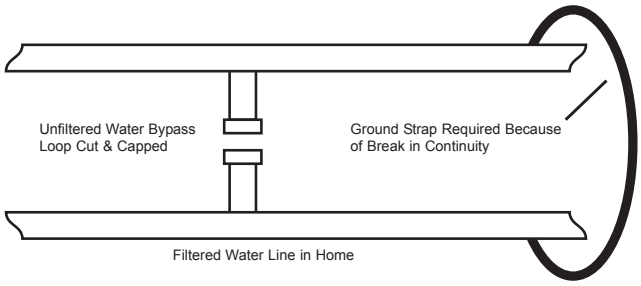

WARNING

If the ground from the electrical panel or breaker box to the water meter or underground copper pipe is tied to the copper water lines and these lines are cut during installation of the bypass valve and/or poly pipe, an approved grounding strap must be used between the two lines that have been cut in order to maintain continuity. The length of the grounding strap will depend upon the number of units being installed and/or the amount of copper pipe being replaced with plastic pipe.

See Figure 1.

MECHANICAL

Do NOT use petroleum-based lubricants such as petroleum jelly, oils or hydrocarbon based lubricants. Use only 100% silicone lubricants (packet Part #92360 provided in parts kit). All plastic connections should be hand tightened only. Thread tape may be used on connections that do not use an O-ring seal.

Do NOT use pliers or pipe wrenches except when indicated by nut shape, e.g., pipe adapters. All plumbing must be completed according to local codes. Soldering connections should be done before connecting any plastic pieces to the pipe as excessive heat can damage them.

Conditioner resins will degrade in the presence of chlorine or chloramines above one (1) ppm. If you have anything in excess of this amount, you will experience reduced life of the resin. Carbon filtration will help to reduce chlorine/chloramine levels found in today's municipal water supplies, prolonging the life of the resin and providing better tasting, odor free water.

TOOLS REQUIRED FOR INSTALLATION

- Two adjustable wrenches.
- Additional tools may be required if modification to home plumbing is required.
- Plastic inlet and outlet fittings are included with the conditioner. To maintain full valve flow, use of ¾" or 1" [1.9 cm or 2.54 cm] pipes to and from the conditioner. You should maintain the same or larger pipe size as the water supply pipe to the conditioner inlet and outlet.
- Use copper, brass, or PEX pipes and fittings.
- Some codes may also allow PVC plastic pipe.
- 5/8" [15.8 mm] Outside Diameter drain line is needed for the valve drain.
- Drain line tubing may be needed for the optional brine tank overflow fitting.

NOTE

Use of a competent installer or plumbing professional to ensure this product is installed in accordance with local plumbing codes is recommended. Canature is not liable for any non-compliance with local requirements.

PREPARATIONS

MEDIA INSTALLATION (WHEN NECESSARY)

When larger units cannot be loaded due to weight restrictions, media will be shipped pre-measured in separate containers. Follow the steps below for proper media loading.

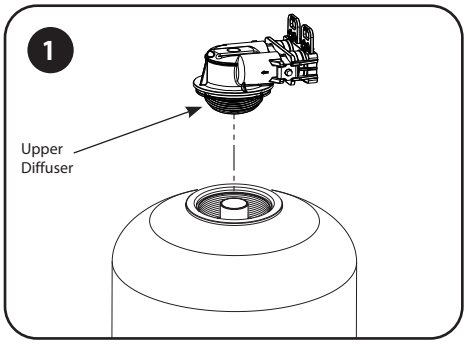

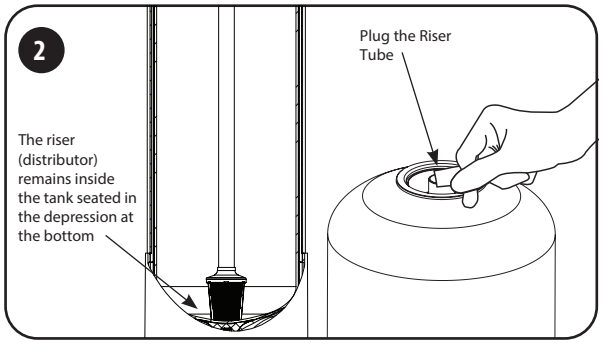

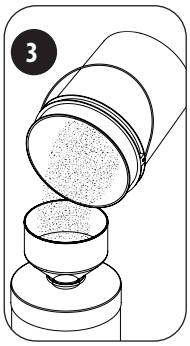

1. Remove the adaptor and valve from the mineral tank.Grease the bottom oring of the adaptor with silicone grease provided

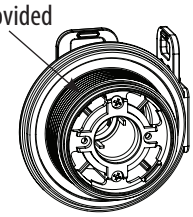

2. Temporarily plug the open end of the riser tube to ensure that no resin or gravel falls down into the distribution. The riser (distributor) remains inside the tank seated in the depression at the bottom. Plug tube with a tape. Remove after media is loaded. Ensure the bottom of the riser tube remains seated in the depression at the bottom of the tank. Fill tank one-quarter full with water to protect the distribution tube during gravel installation.

3. Fill the gravel support bed first. A large funnel makes filling the tank much easier. Order part #99003 separately for your own funnel. Slowly add the gravel Depending on the type of system, add the resin, or media next.

MANDATORY

Wear a Dust Mask.
Airborne particles could pose potential health risks.

CAUTION

The unit should be depressurized before installing or replacing media

NOTE

If severe loss in water pressure is observed when the conditioner unit is initially placed in service, the conditioner tank may have been laid on its side during transit. If this occurs, backwash the conditioner to 'reclassify' the media.

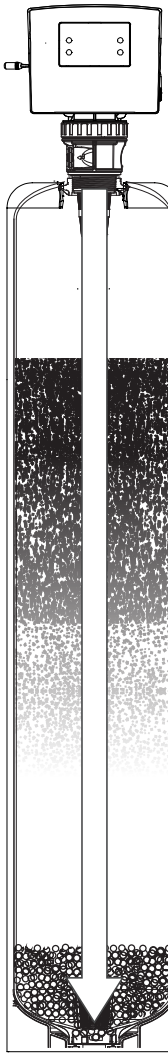

PREPARATIONS (CONTINUED)

MEDIA INSTALLATION (WHEN NECESSARY)

TYPES OF MEDIA

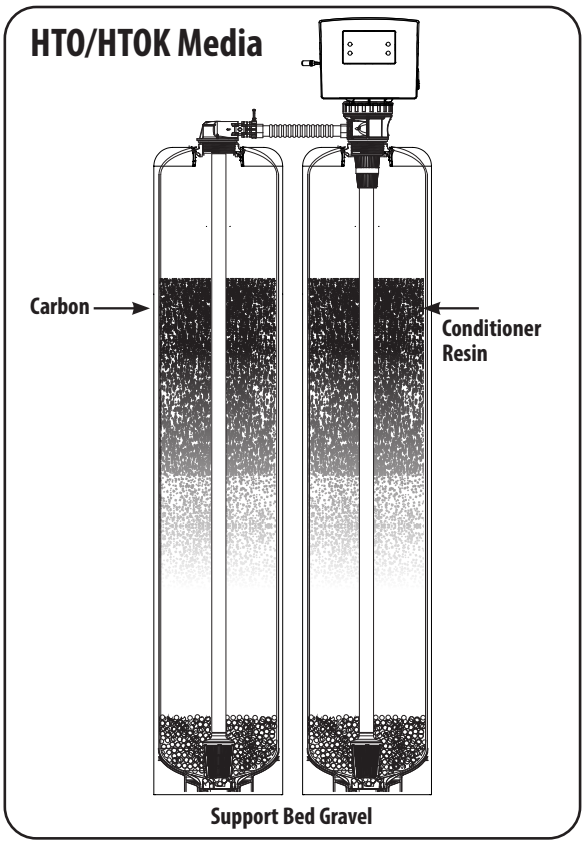

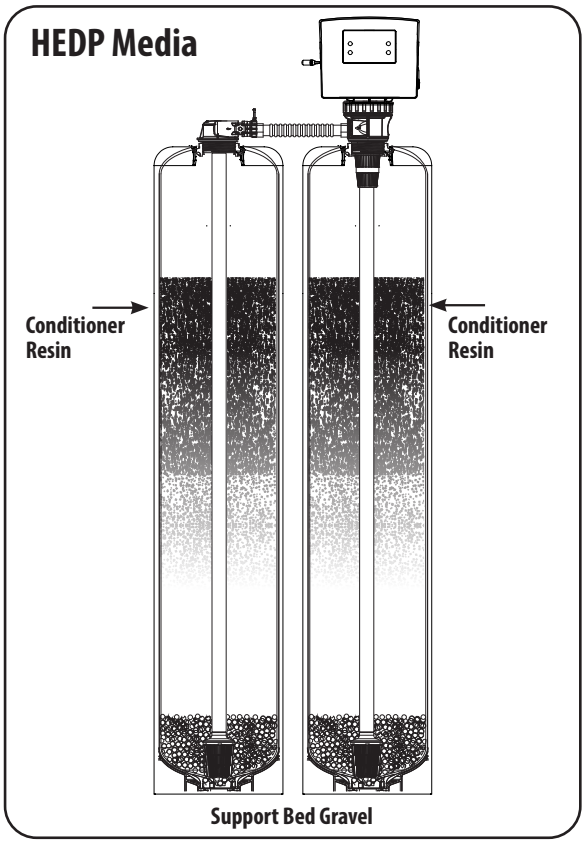

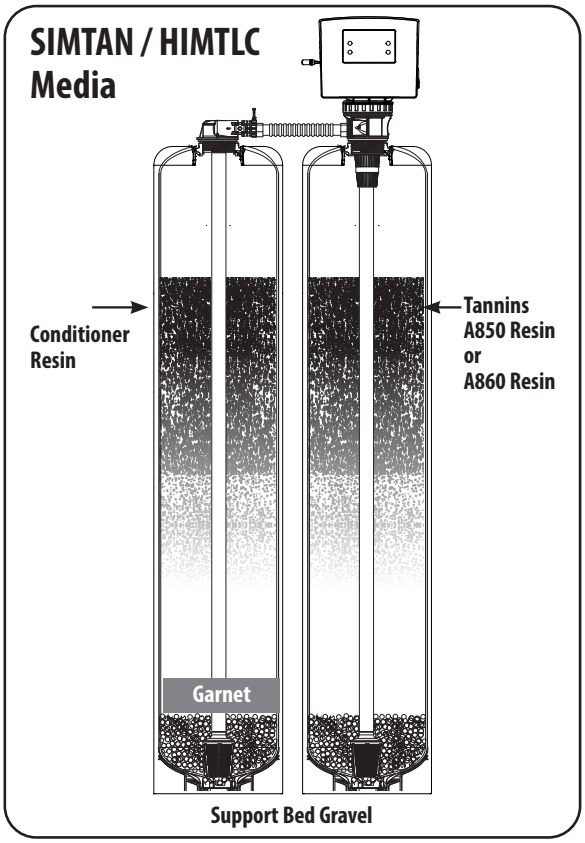

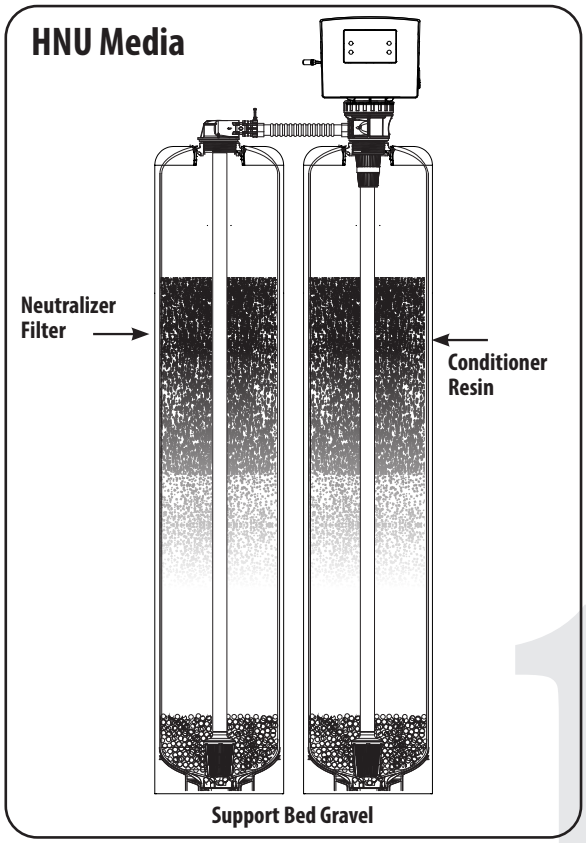

PREPARATIONS (CONTINUED)

4 Apply the supplied lubricant (part #92360) to the internal O-ring at the bottom of the control valve. Apply lubricant to the larger O-ring on the bottom of the valve that seals with the tank threads.

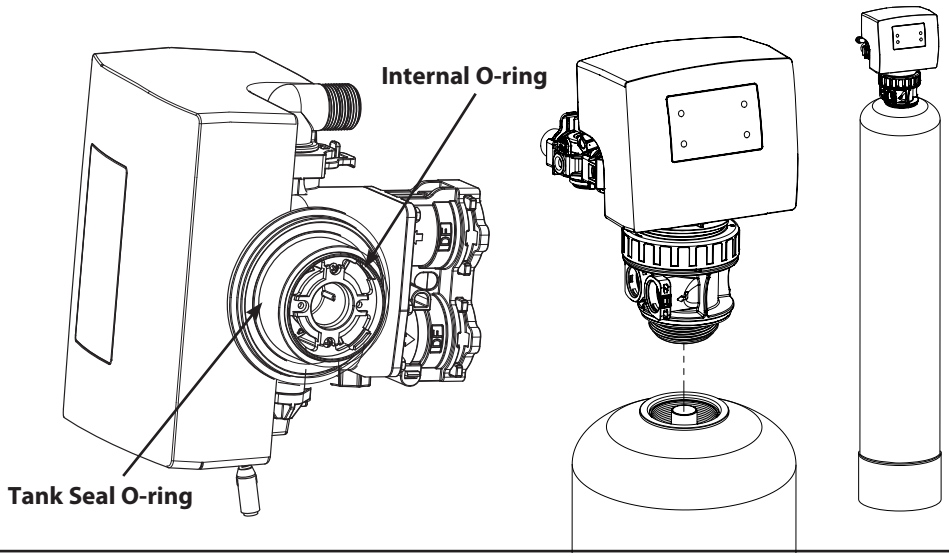

NOTICE

Do NOT use petroleum-based lubricants as they will cause swelling of the O-ring seals.

5 Remove the tape from the top of the riser tube. Carefully position the valve over the riser tube, inserting riser into the internal O-ring. Turn the valve clockwise into the threads of the tank until secure.

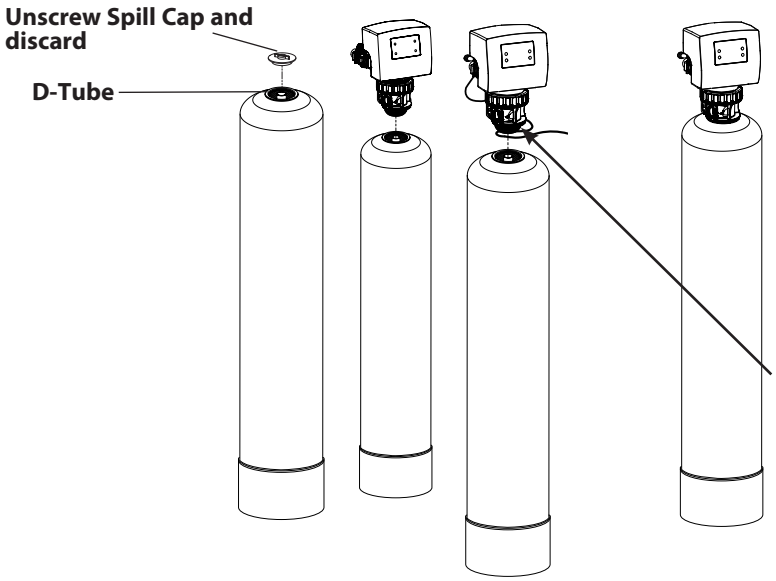

NOTICE

Make sure the quick connect power cord is not yet connected to prevent the cord getting caught between the threads of the tank and the valve.

6 Install the connectors with fitting as shown. Also install the valve on the parallel adaptor.

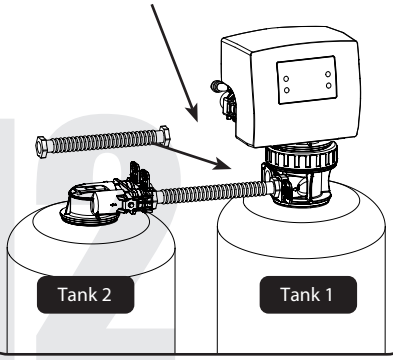

Make sure all red clips are firmly in place before applying pressure

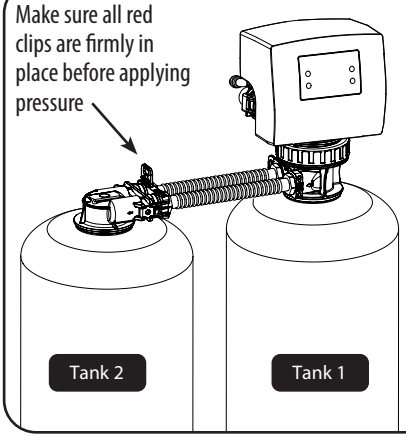

Pipe connector - 8" - 12" / 13" - 18"Tanks

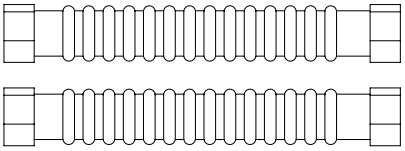

PREPARATIONS (CONTINUED)

BRINE TANK ASSEMBLY

To assemble the brine tank, (some tanks may be square) follow these steps:

1. Attach the three brine grid legs to grid plate. The legs will snap on to the tabs of the salt plate making a "clicking" sound. Please note, some models will have extensions that are intended to be used as well.

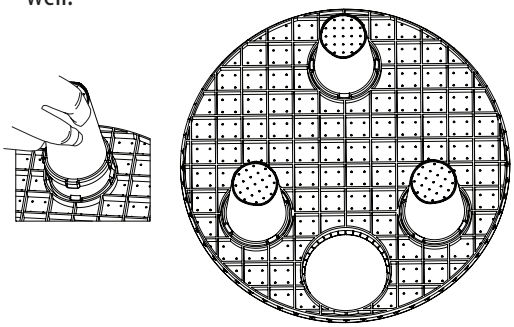

2. Insert the brine well assembly inside and below the grid plate.

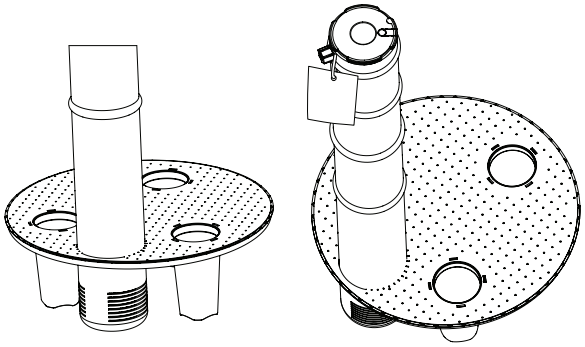

3. Place the brine grid with the brine well inside the brine tank such that the nut fitting faces the hole on the brine tank. Then press the grid evenly inside the brine tank until the brine grid legs and the brine well, as an assembly, touch the bottom of the brine tank.

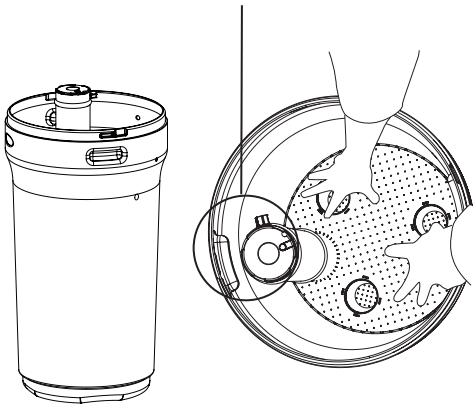

The hole in the brine tank should line up with the brine line as shown

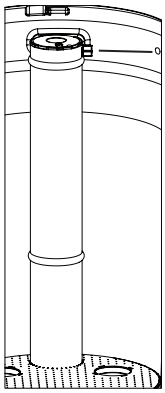

IMPORTANT: IN ROUND BRINE TANK, IT IS IMPORTANT TO ALIGN THE HANDLE TO THE BRINE WELL AS SHOWN.

4. Take the brine tube and insert the nut and plastic sleeve as shown below.

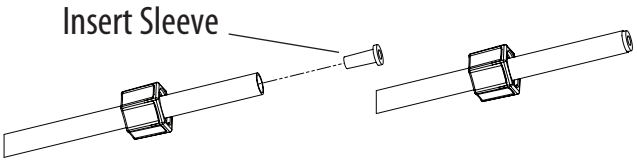

5. Insert the tube in the float assembly elbow and hand-tighten the nut. In many cases the brine line already comes installed from the factory. Leave the other end of the brine line tube inside the brine tank.

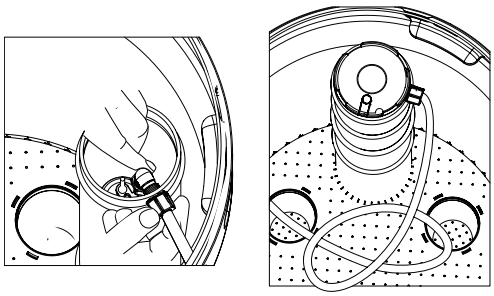

6. For installation of brine tank at the installation site, pull the other end of the brine tube from the hole on the brine tank. The completed assembly is below.

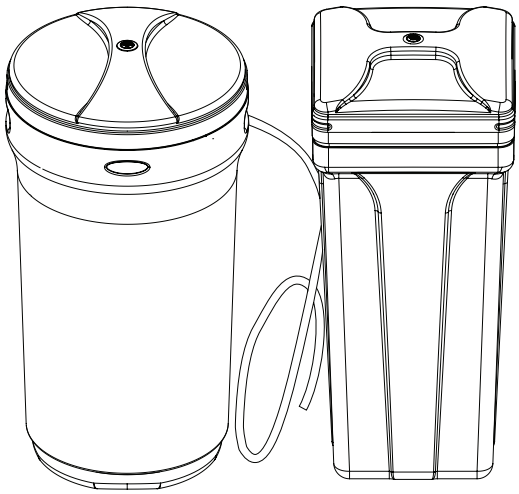

PLANNING YOUR INSTALLATION

WATER CONDITIONER INSTALLATION LAYOUT

Select the location for your conditioner tank with care. Various conditions that contribute to proper location include:

1. All installation procedures must conform to local or regional plumbing codes. Canature is not liable for any non-compliance with local requirements
2. Outside taps used to water lawns and gardens should be isolated from the water line required to supply untreated water to the inlet of the water conditioner – a separate (new) line may be needed.
3. Where required by local plumbing codes, a check valve may need to be installed. Canature is not liable for any non-compliance with local requirements
4. Locate conditioner as close as possible to the water supply source.
5. Locate conditioner as close as possible to a floor or laundry tub drain and a 120 volt AC electrical outlet.
6. Conditioners should be located before the water heater on the supply line. If closer than three (3) metres [10 feet], install a check valve in accordance with local plumbing codes.
7. Do NOT install a conditioner in a location where freezing temperatures occur. Freezing may cause permanent damage to this type of equipment and will void the factory warranty. Freezing could also result in flooding and / or property loss and damage.
8. Allow sufficient space around the unit for easy servicing.
9. Keep the conditioner out of direct sunlight.

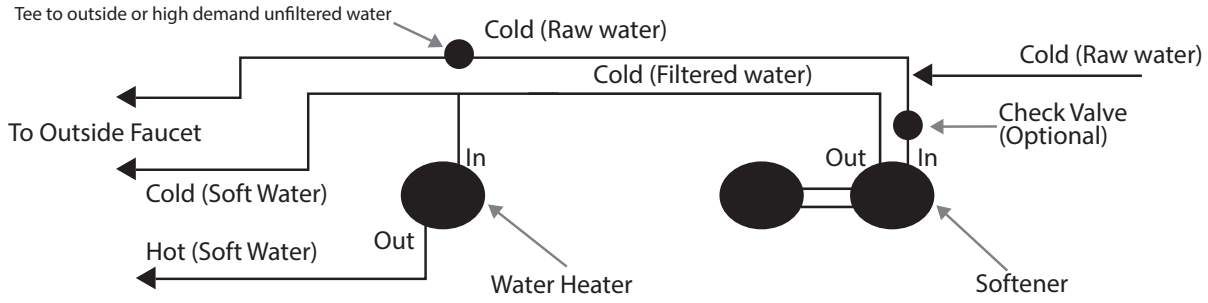

***NOTE**

Check local plumbing codes requirements for use of check valve(s), back-flow prevention, or vacuum breakers. Canature is not liable for any non-compliance with local requirements.

WATER CONDITIONER INSTALLATION
UPFLOW

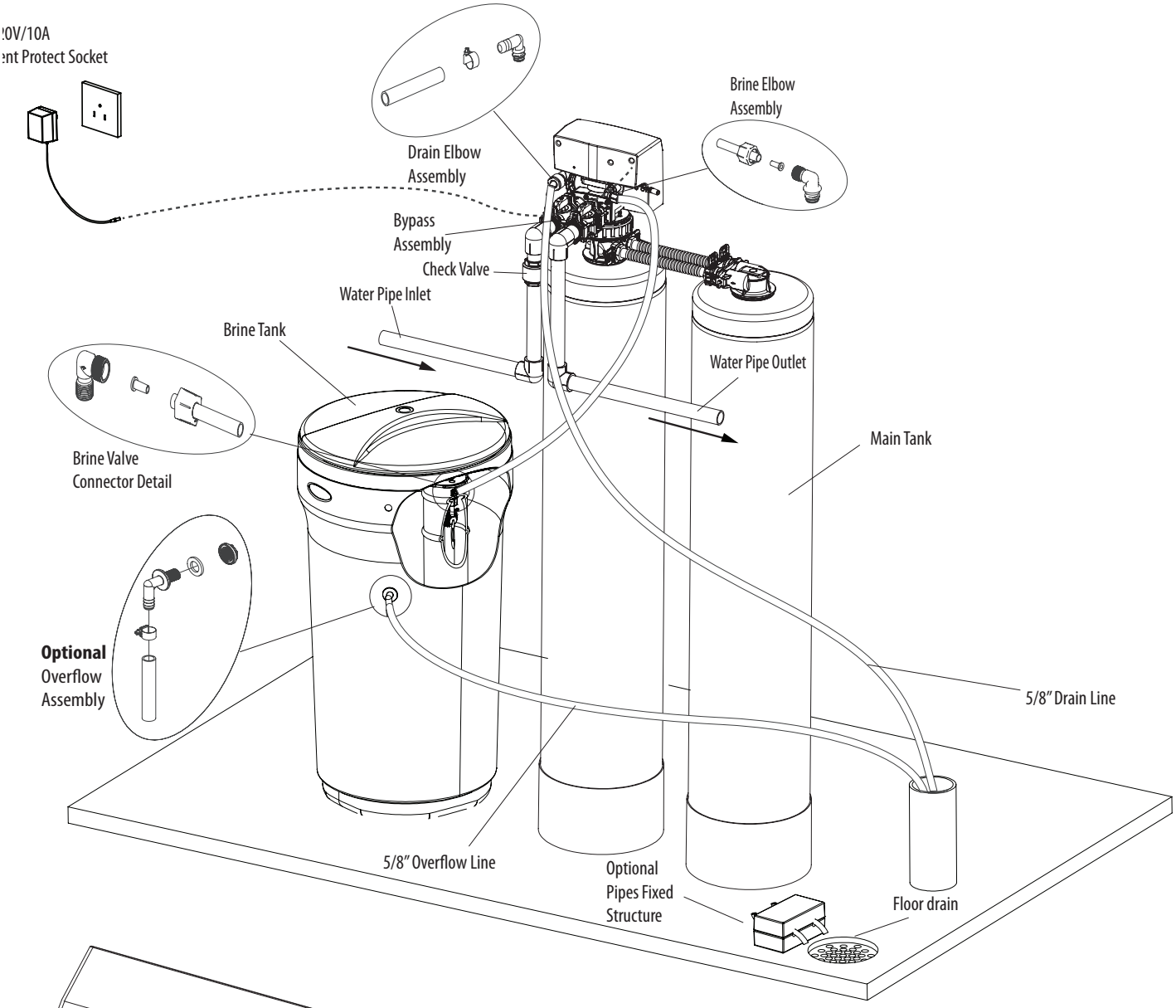

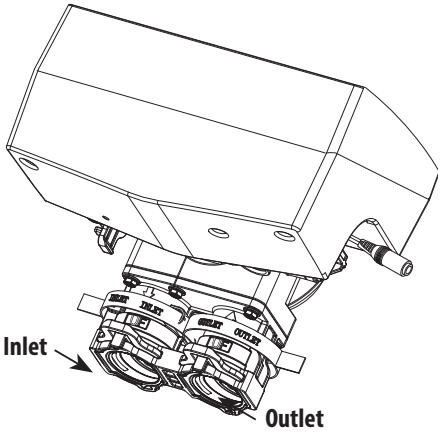

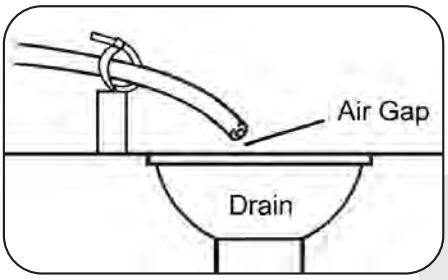

INSTALLATION STEPS

TO BEGIN YOUR INSTALLATION:

1. Make sure the bypass is attached securely to the control valve.
2. Apply thread tape to threaded connections elbow plumbing adaptors
3. Apply the supplied lubricant (#92360) to the O-rings of the fittings.
4. Connect the supplied elbow plumbing adaptors to the bypass with red clips.
5. Connect the inlet and outlet of the water conditioner to the plumbing of the house.

NOTICE

Any solder joints near the valve must be done before connecting any piping to the valve. Failure to do this could cause damage to the valve.

NOTICE

Do NOT use pipe thread compound as it may attack the material in the valve body.

NOTICE

Failure to leave enough distance could cause damage to the valve. Always leave at least 6″ [152 mm] between the valve and joints when soldering pipes that are connected to the valve.

6. For the drain line connection; attach a 1/2″ [12.7 mm] Inside Diameter (ID), 5/8″ [15.875 mm] Outside Diameter (OD) drain hose to the drain line fitting.
   - **a.** Run the drain line to a floor or laundry drain.
   - **b.** Complete any necessary plumbing to maintain a proper air gap.

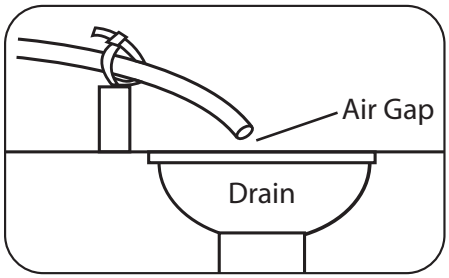

NOTE

The waste connections or drain outlet shall be designed and constructed to provide for connection to the sanitary waste system through an air-gap of 2 pipe diameters or 1″ [25.4 mm] whichever is larger.

CAUTION

Never insert drain line directly into a drain, sewer line, or trap. Always allow an air-gap between the drain line and the wastewater to prevent the possibility of sewage being back-siphoned into the conditioner.

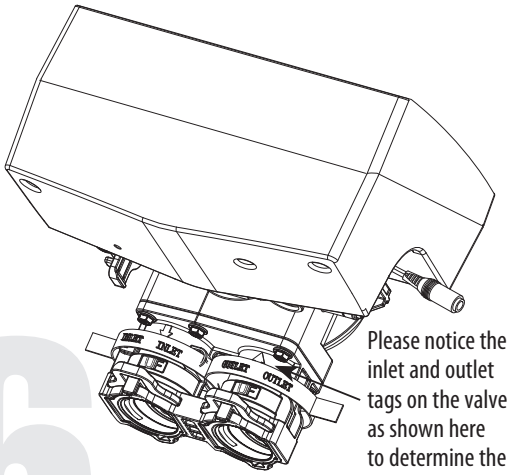

Please notice the inlet and outlet tags on the valve as shown here to determine the position of the equipment

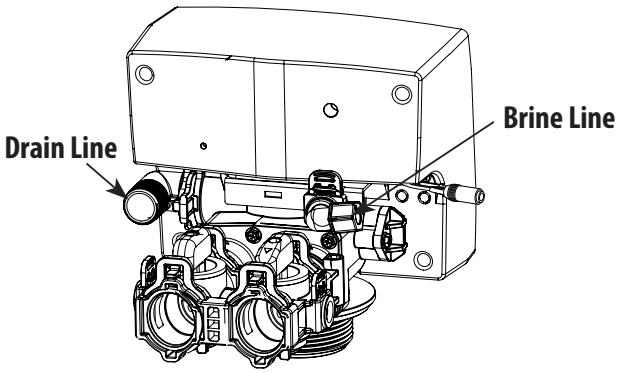

INSTALLATION STEPS (CONTINUED)

7. Attach the brine line from brine tank to brine line fitting on control valve. install the tube stiffener into the end of the brine line before attaching it to the brine line fitting on the control valve See **Fig. 2**.
8. Using the included Allen key, place the unit in the bypass position.
   - **a.** Slowly turn the main water supply ON.
   - **b.** At the nearest cold treated water tap, remove the tap screen, OPEN the tap and let water run a few minutes or until the system is free of any air or foreign material resulting from the plumbing work.

Fig. 2.

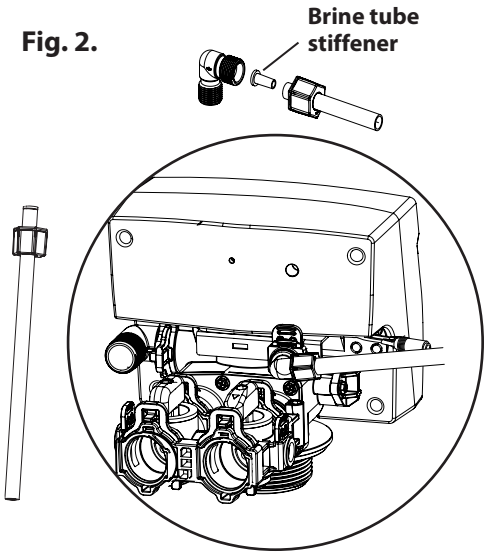

MANUAL WATER BYPASS

In case of an emergency, or to perform conditioner maintenance, you can isolate your water conditioner from the water supply using the bypass valve located at the back of the control.

In normal operation the bypass is OPEN with the ON/OFF knobs in line with the INLET and OUTLET pipes, i.e., the black marks in the vertical position. See SERVICE below.

To isolate the conditioner, simply rotate the knobs as indicated to the CLOSE position until they lock. You can continue to use your water related fixtures as the water supply is bypassing the conditioner. However, the water you use will be untreated.

To resume treated service, OPEN the bypass valve by rotating the knobs back to the SERVICE position.

NOTE

If the tap has a screen, it should be removed to allow debris to flush out of the plumbing.

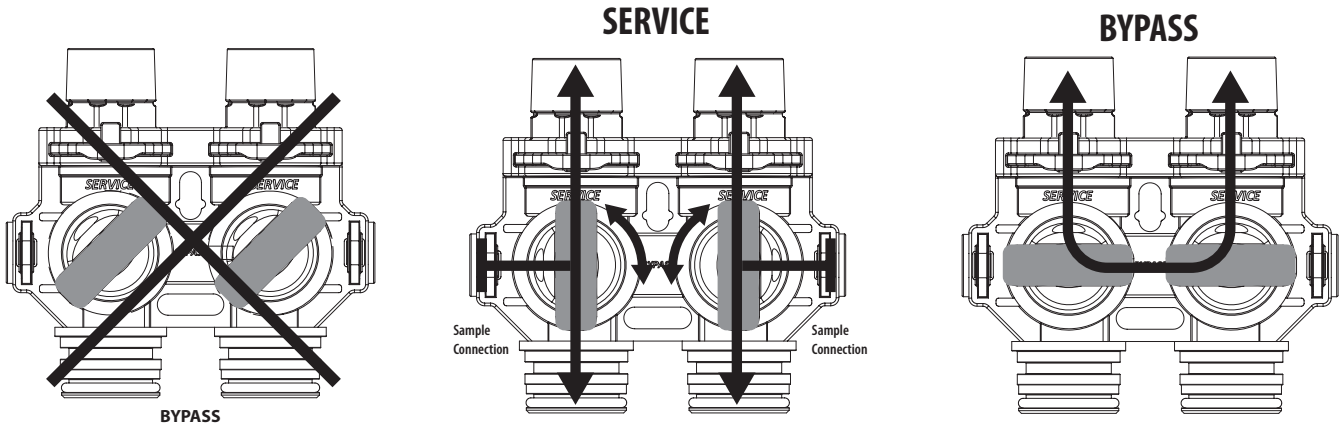

NOTE

Please make sure bypass knobs are completely open otherwise the untreated water may enter through the valve.

9. Make sure there are no leaks in the plumbing system before proceeding. Shut the water tap OFF when the water runs clean.

UNDERSTAND THE SCREEN & KEYPAD CONFIGURATION

The control valve is controlled with simple, user-friendly electronics, displayed on an LCD screen.

Connect the Transformer

Connect the transformer to the unit by plugging the 12 volt transformer into a 120 VAC 60 Hz outlet.

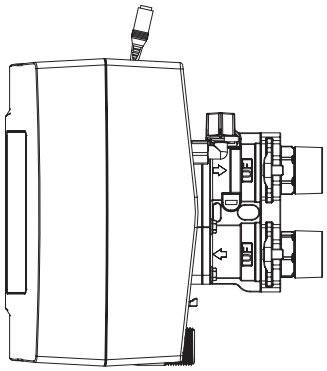

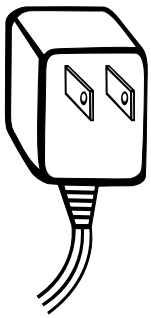

WARNING

If your power supply is subject to surges or frequent outages, surge protection is recommended to protect the electronics in this product

When the power is connected, the screen will show the following information:

Key Pad Configuration – the terminology used on the conrol valve label may vary by model. For the purpose of programming, this manual will use numbers associated with each button position as shown below:

1 This function is to enter the basic set up information required at the time of installation.

3 This function is to initiate an immediate or delayed manual regeneration.

2/4 Increase or decrease the value of the settings while in the programming mode.

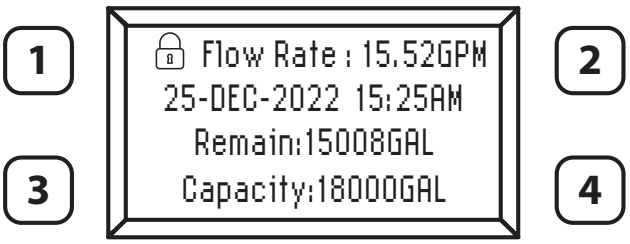

MANDATORY

Do NOT use an outlet that is controlled by a light switch.

START-UP INSTRUCTIONS

Now that your water conditioner is plumbed into position it is time to start up and program the unit.

STEP 1. ADD WATER TO BRINE TANK

1. Open the brine tank/cabinet salt lid and fill with water until there is approximately 1" [25.4 mm] of water above the grid plate.
2. If there is no grid plate, fill the tank with 3" [75 mm] of water.

Do NOT add salt to the brine tank at this time.

STEP 2. PURGE AIR FROM THE UNIT

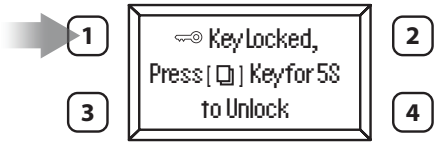

1. Press and hold **button one (1)**, the display will read **"PRESS [ ] 5 Seconds to Unlock"**. After 5 seconds, the display will beep confirming unlock.

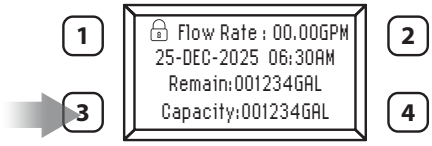

2. Press and hold **button three (3)** to start Manual Regeneration process.
3. Press and hold any button to advance to Backwash.

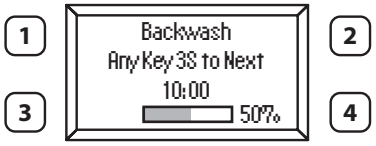

4. The display will indicate the time remaining.
ALLOW TO FINISH FULL CYCLE.

5. **Open the bypass inlet very slowly** until there is a steady stream of water at the drain. Opening the bypass inlet too quickly could result in resin being expelled from the unit and into the plumbing lines. With the valve in the backwash position the unit will purge air from the system, sending it to the drain. This may take longer than the programmed backwash cycle time, so unplug the power so that the valve will remain in the backwash position.
6. With the bypass inlet now fully open, let the system run until all the air is purged and there is a steady stream of water at the drain.
7. Reconnect the power, press and hold any button to advance to the refill position and allow the unit to refill to 1" [25.4 mm] above the grid board or 3" [76.2 mm] of water in cabinet models – this may require manually advancing the unit through its cycles more than once. Alternatively, you can press and hold any button to advance to the service position and manually add the required amount of water as described in step 1.
8. Allow the unit to return to the SERVICE position.
9. Slowly open the bypass OUTLET knob until fully open.

NOTE

If severe loss in water pressure is observed when the conditioner unit is initially placed in service, the conditioner tank may have been laid on its side during transit. If this occurs, backwash the conditioner to 'reclassify' the media.

! MANDATORY

Be sure to open the bypass inlet very slowly. Do NOT FULLY open the bypass inlet until there is a steady stream of water at the drain as this will result in media being expelled from the unit

START-UP INSTRUCTIONS (CONTINUED)

STEP 3. HOW TO SET DATE AND TIME, HARDNESS, MANUAL REGENERATION, DEALER INFO, SALT REMINDER

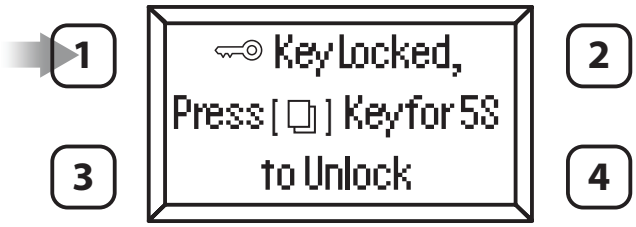

1. Press and hold **button one (1)**, the display will read **"PRESS [ ] 5 Seconds to Unlock"**.
2. After 5 seconds, the display will beep confirming unlock.
3. Press **button one (1)** [ ] to enter user programming.

Date & Time

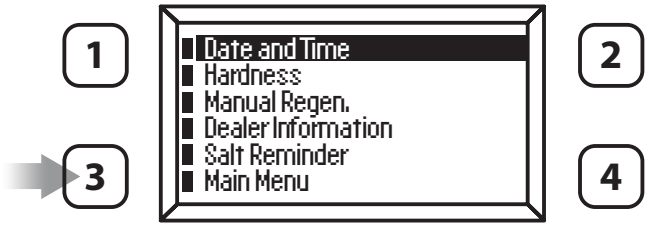

1. Press **button three (3)** to select Date and Time.

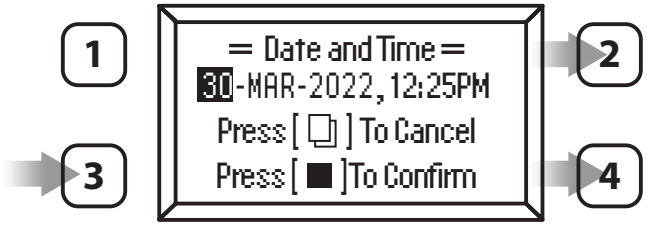

2. Press **buttons two (2)** or **four (4)** to adjust Date and Time. Press **button three (3)** to Confirm.

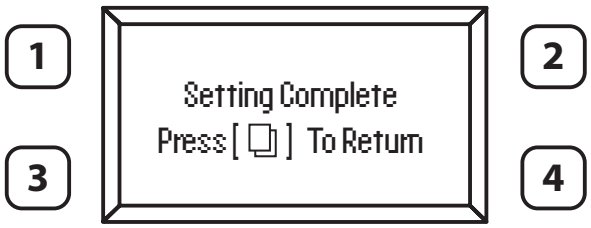

3. Setting complete.

DATE AND TIME

Time of day is for normal operation of system and the scheduling of the regeneration time. The date is used in a diagnostic function to track the last time the system regenerated.

START-UP INSTRUCTIONS (CONTINUED)

Hardness

This unit is factory set for the correct size. You are required to program the date, the time of day, and the correct hardness setting. Please review **Compensated Hardness Calculation** before entering the hardness number from your water analysis.

Compensated Hardness Calculation:

___ ppm Iron x 4 = ___ grains of hardness

___ ppm Manganese x 8 = ___ grains of hardness

These numbers can be found on your water analysis report, and the equivalent grains of hardness should be added to your total hardness number. The new sum of these numbers is the hardness to be entered during the programming.

Example

Our water analysis states that our hardness is 15 gpg.
To this we add;
Iron = 0.5 ppm x 4= 2.0 gpg
Manganese = 0.3 x 8= 2.4 gpg which we round-up (always) to 3.0 gpg

We use the following hardness equation to derive our total hardness number.
Hardness = 15 gpg + 2.0 (now called compensated iron) + 3.0 (compensated manganese) = 20 gpg.

Enter 20 for total hardness when programming.

NOTE

HTO, HEDP, HNU models
See **Start-Up Instructions - Problem Water Injector Kit** **if you have iron in your water and are installing an upflow water conditioner.**

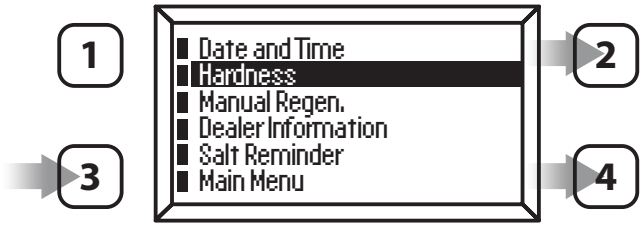

1. Press **buttons two (2)** or **four (4)** to select Hardness. Press **button three (3)** to Confirm.

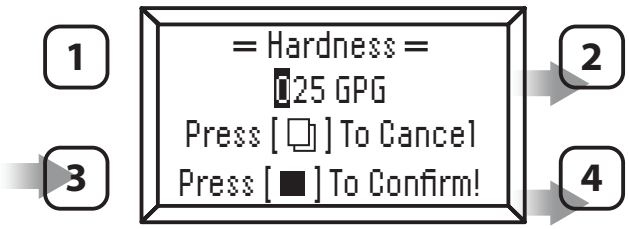

2. Press **buttons two (2)** or **four (4)** to adjust Hardness. Press **button three (3)** to Confirm.

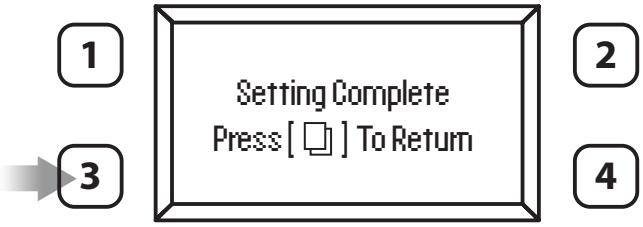

3. Setting complete.

HARDNESS

This value is the maximum compensated water hardness in grains per gallon of the raw water supply. It is used to calculate the system capacity. If Ferrous Iron is present add 4 gpg for every 1 ppm of Ferrous Iron.

STEP 4. ADD SALT TO BRINE TANK/CABINET

Put 80 to 100 lbs [40 kg] of water conditioner salt into the brine tank. The unit will automatically fill the water to the correct level when it regenerates.

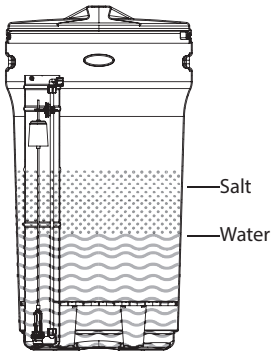

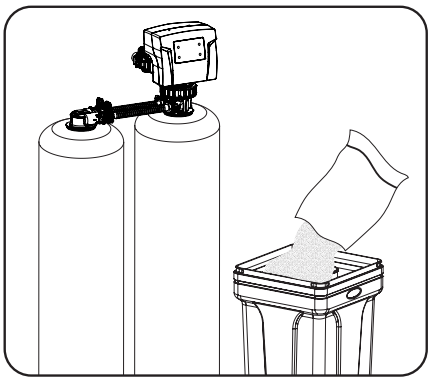

Congratulations! Start-Up Instructions are now complete – the unit is operational.

OTHER MAIN MENU FEATURES

To Initiate a Manual Regeneration

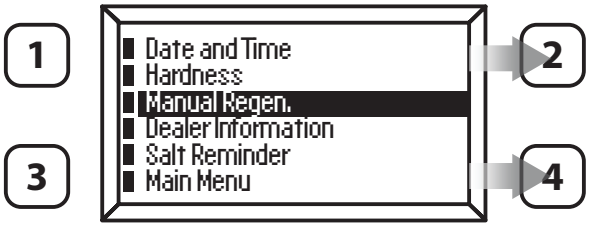

1. Press **buttons two (2)** or **four (4)** to select Manual Regen.
Press **button three (3)** to Confirm.

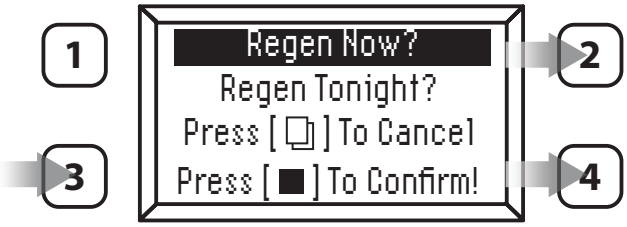

2. Press **buttons two (2)** or **four (4)** to select Regen Now or Regen Tonight.
Press **button three (3)** to Confirm.

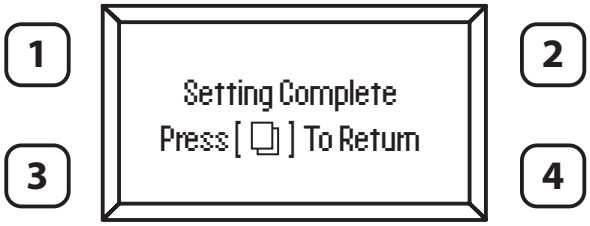

3. Setting complete.

Dealer Info

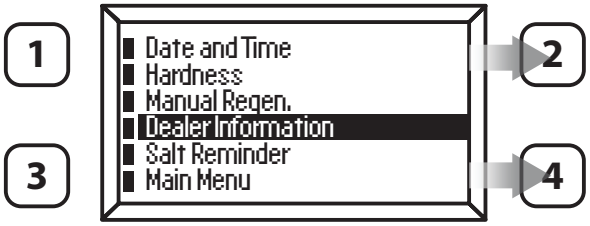

1. Press **buttons two (2)** or **four (4)** to select Dealer Information.
Press **button three (3)** to Confirm.

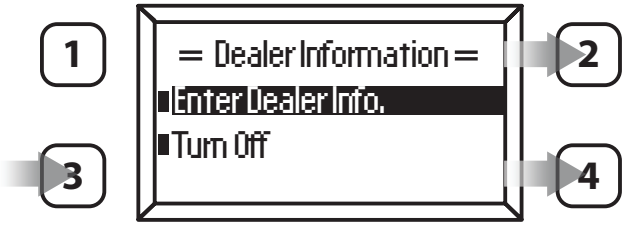

2. Press **buttons two (2)** or **four (4)** to select.
Press **button three (3)** to Confirm.

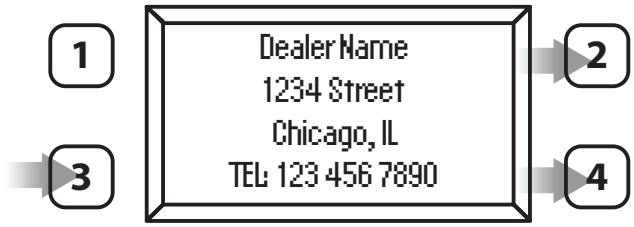

3. Press **buttons two (2)** or **four (4)** to select desired Letters or Numbers.
Press **button three (3)** to Confirm.

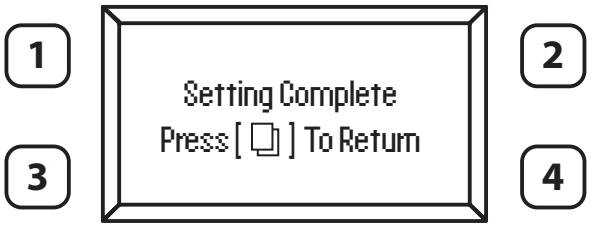

4. Setting complete.

Salt Reminder

There is an optional salt reminder feature that will provide both a visual and audible alarm based on the salt consumption settings. Every time the system consumes the selected Salt Quantity, an audible alarm will sound for the selected two hour period and the backlit display screen will flash. It is best to set the alarm for a time that you are normally in the area of the water conditioner (i.e. doing laundry). A standard bag of salt weighs 40 lbs so if you put three bags of salt into the tank you can select 120 lbs when setting the Salt Reminder. The reminder will repeat each day until silenced.

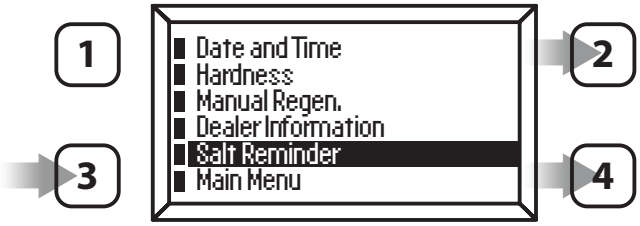

1. Press **buttons two (2)** or **four (4)** to select.
Press **button three (3)** to Confirm.

2. Press **buttons two (2)** or **four (4)** to select.
Press **button three (3)** to Confirm. Factory set to OFF.

3. When set to ON, Salt Usage, Alarm On Time and Salt Quantity can be set following these steps.

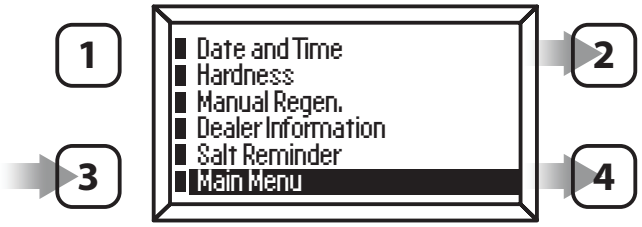

4. Press **buttons two (2)** or **four (4)** to select.
Press **button three (3)** to select Main Menu.

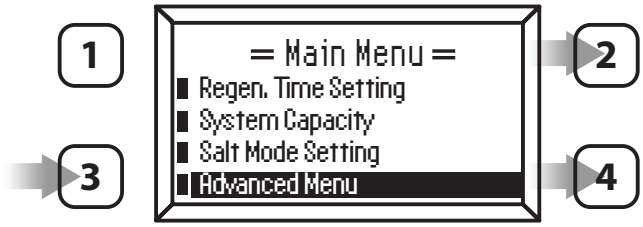

5. Press **buttons two (2)** or **four (4)** to select Advanced Menu.
Press and hold **button three (3)** for five (5) seconds to enter.

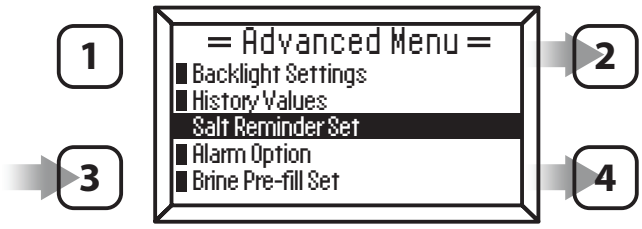

6. Press **buttons two (2)** or **four (4)** to select Salt Reminder Set.
Press **button three (3)** to enter.

Salt Reminder (continued)

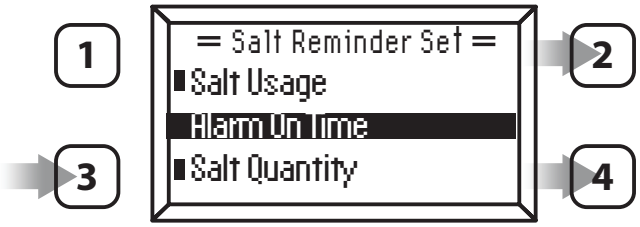

7. Press **buttons two (2)** or **four (4)** to select Alarm On Time.
Press **button three (3)** to enter.

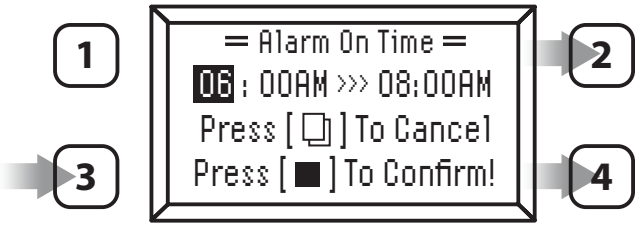

8. Select the time of day for the salt reminder alarm to sound.
Press **buttons two (2)** or **four (4)** to select a number.
Press **button three (3)** to advance to the next position.

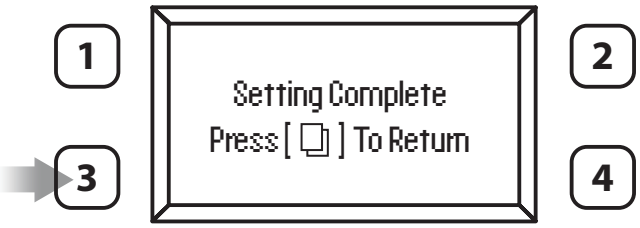

9. Setting complete.

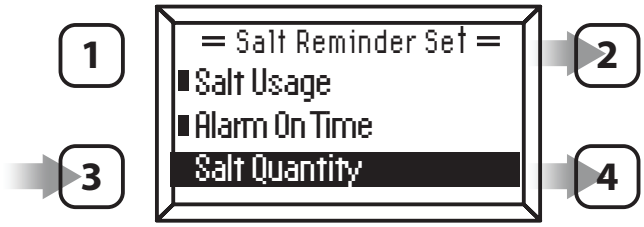

10. Press **buttons two (2)** or **four (4)** to select Salt Quantity.
Press **button three (3)** to enter.

11. Enter the amount of salt in 20lb increments.
The salt usage alarm will sound when number of lbs of salt quantity reaches zero (0).
Press **buttons two (2)** or **four (4)** to select a number.
Press **button three (3)** to advance to the next position.

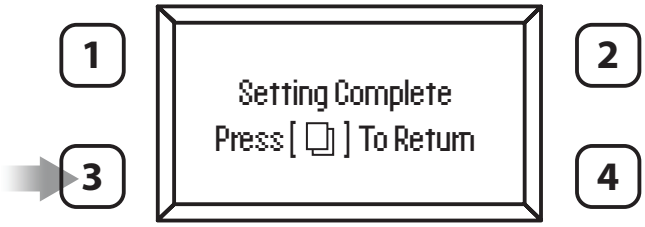

12. Setting complete.

Reset alarm by touching any button. Remember when you reset the alarm you need to adjust the pounds of salt in the Salt Quantity setting to match the amount of salt you add to the tank.

PROBLEM WATER INJECTOR KIT

IMPORTANT!: If the water source this water softener is being applied on is not municipal water and contains up to 1.5 mg/l/ppm of ferrous (Clear Water) iron and/or up to .75 mg/l/ppm of manganese, the enclosed **Problem Water Injector Kit** needs to be installed into the control valve following these instructions. You will need to make **3 programing changes.** In the main user settings: **1.** Salt Mode Setting change to High Capacity Mode. **2.** Salt vs Efficiency setting capacity requires additional adjustments see instructions below. **FAILURE TO DO THIS WILL RESULT IN UNSATISFACTORY OPERATION OF THIS EQUIPMENT AND VOID ANY IMPLIED PERFORMANCE WARRANTY.**

89UF Valve

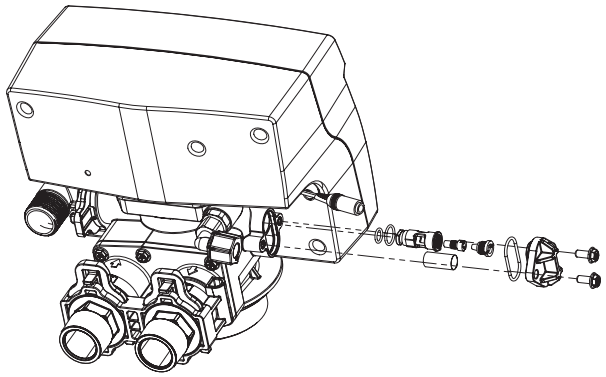

Replace injectors with correct number and color corresponding to your equipment size.

***NOTE**: Remember to properly lubricate ALL O Rings with Silicone Lubricant - supplied.

Size CF	Color
1.0	#1 WHITE
1.5	#1 WHITE
2.0	#2 BLUE

IMPORTANT

The injector cage must be lined up and inserted properly to avoid crushing when the injector cap is re-installed. Markings on the cage and valve body must line up.

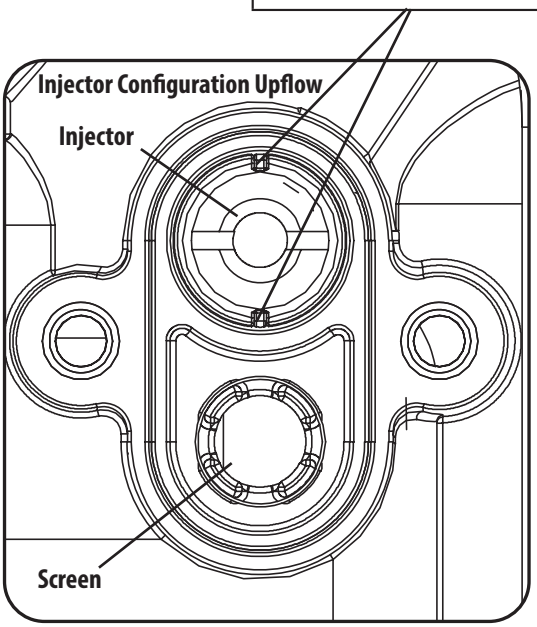

CAUTION!

DO NOT over tighten injectors. Snug tight only.

Programming Change Required

Change the Salt Mode Setting in the second level programming from 2,500 grains per pound of salt to 2,100 grains per pound of salt.

1. The display will read **PRESS MENU KEY ■ 3 SEC TO UNLOCK"**.
2. After 3 seconds, the display will beep confirming unlock.

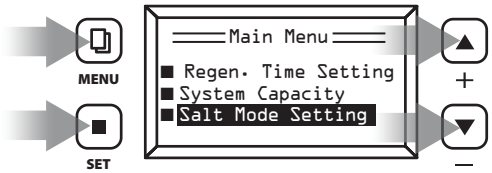

3. Press **PRESS MENU KEY** and arrow down to **Main Menu**
4. Arrow down to **Salt Mode Setting**
5. Choose High Capacity Mode. Press **SET** to confirm

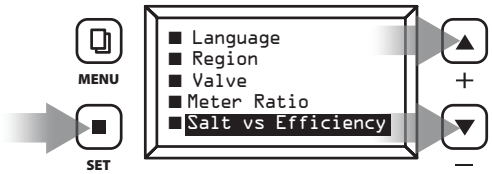

6. Press & hold **UP** & **DOWN** arrows
7. Press **DOWN** arrow to **Salt vs Efficiency** and press **SET**

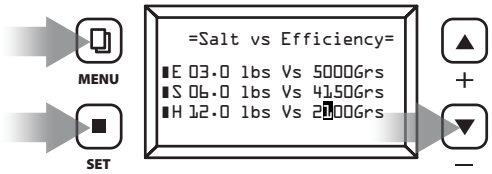

8. Press **SET** to go to **Line H** to change **Grains.** Press **DOWN** arrow to change 2500 to 2100. Press **SET** until setting is complete. Press **MENU** to exit.

IMPORTANT

This change is necessary to compensate for the injector conversion

PLUMBING SYSTEM CLEAN UP

The following procedures are guidelines only but have proven successful in most instances. Under no circumstances should any procedure outlined below be followed if contrary to any other household appliances manufacturer's instruction(s). Should there be any questions concerning the advisability of performing a procedure, it is strongly recommended that the dealer be consulted prior to performing the procedure. Canature is not liable for any damages that result of failing to follow the household appliance manufacturer's instructions and/or any issues that arise from following those instructions.

WATER HEATER

If the water heater has been exposed to both iron and hardness for a long period of time, replacement of the heater tank maybe the only practical solution to prevent continued staining originating from this source. After completing the installation of the conditioner, clean the water heater by following these instructions;

1. Turn the energy supply to the water heater OFF and shut the heater inlet water valve OFF.
2. Drain hot water tank completely. OPEN the Inlet Water Valve allowing the heater tank to be refilled with iron free water. Continue flushing until clear water runs to the drain.
3. If, after 30 minutes flushing, the water does NOT clear, terminate flushing operation.
4. REFILL hot water heater with water and pour approximately .19 gal or [.7 liters] of household bleach into the top of the heater tank. Allow bleach solution to stand in tank for thirty (30) minutes. Flush tank.
5. Turn the energy supply back ON.

DISHWASHER

Dishwashers may have scale buildup due to prolonged exposure to hard water effecting the factory rated performance. Consult the owner's handbook and follow the manufacturer's instructions.

TOILET FLUSH TANKS

To clean up toilet flush tanks:

1. Pour 4 to 6 fluid ounces [120-175 millilitres] of resin mineral cleaner, Pro-Rust Out or any other suitable cleaner that contains a mild acid, such as CLR, into flush tanks and bowls, and let stand for one (1) hour.
2. When installation is completed, flush toilets several times with conditioned water.
3. If stains or deposits return, check that the lines are connected to treated water.

SANITIZATION PROCEDURE

Care is taken at the factory to keep your water conditioner clean and sanitary. Materials used to make the conditioner will not infect or contaminate your water supply, and will not cause bacteria to form or grow. However, during shipping, storage, installing, and operating, bacteria could get into the conditioner. For this reason, sanitizing is suggested when completing installation.

TO SANITIZE:

1. Be sure to complete all installation steps, including programming before sanitizing.
2. For effective and complete sanitization, Sani-System Liquid Sanitizer Concentrate is recommended. Pour one packet into the brine well located in the cabinet or brine tank. Alternatively use 3/4 fl oz [22 ml] of common household bleach.
3. Start an immediate regeneration.
4. The solution in the brine well is drawn into and through the water conditioner to sanitize itself. This sanitizing regeneration takes two (2) hours. Then, treated water is available for your use.

Sanitizing is recommended by the Water Quality Association for disinfecting. Quarterly sanitizing is suggested for low-quality water supplies.

Sani-System Liquid Sanitizer Concentrate

Item 50032 Pack of 24 conditioner sanitizer. 2.5 fl oz [7.4 ml]

SYSTEM MAINTENANCE

Maintenance of your new water conditioner requires very little time or effort but is essential. Regular maintenance will ensure many years of efficient and trouble-free operation. Check with your local dealer about setting up a regular maintenance plan.Failure to follow maintenance instructions and schedule will result in the unit failing to operate properly and void your warranty.

CARE OF YOUR CONDITIONER

To retain the attractive appearance of your new water conditioner, occasionally clean it with a mild soap solution. Do NOT use abrasive cleaners, ammonia, or solvents.

SERVICE SCHEDULE

- The seals and spacers along with the piston assembly should be inspected/cleaned or replaced annually or as required depending on the inlet water quality and water usage. See Inspection and Replacement of Piston Assembly and Seal and Spacer Kit.
- The injectors should be cleaned/inspected or replaced annually or as required depending on the water quality and use. See Clean Injector Assembly.
- Your inlet water quality and water consumption will determine how often the media should be replenished or replaced. Check with your water treatment expert for the media bed change frequency.
- Maintenance materials – Please see Common Spare Parts.

SYSTEM MAINTENANCE (CONTINUED)

ADDING SALT TO THE BRINE TANK / CABINET

Use only clean salt labeled for water conditioner use, such as crystal, pellet, nugget, or button. The use of natural rock salt is discouraged because it contains insoluble silt and sand which buildup in the brine tank and cause problems with the system's operation.

- Put 40 kg [80 to 100 lbs] of water conditioner salt into the brine tank.
- Add the salt directly to the tank, filling it no higher than the top of the brine well. Do NOT overfill the salt tank as the additional weight of salt adds to the potential for salt bridging due to compaction.
- Check the salt level regularly. Remove the lid from the cabinet or brine tank. Ensure that the salt level is above the brine water level.

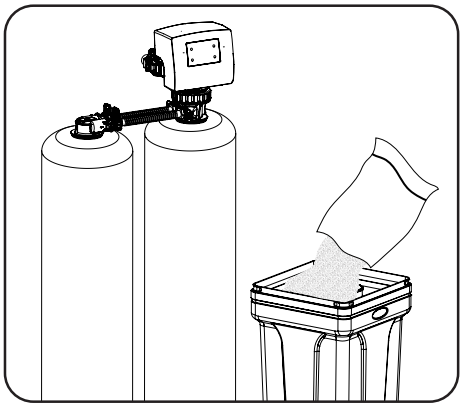

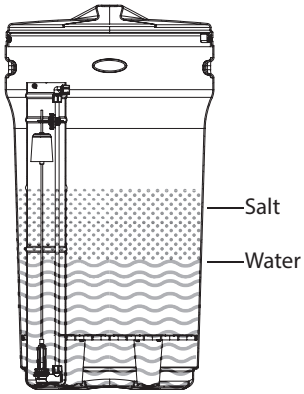

NOTE

The salt level should always be above the water level.

SALT BRIDGING

Humidity or poor-quality salt may create a cavity between the water and the salt. This action, known as 'bridging', prevents the brine solution from being made, and prevents your water from being conditioned.

If you suspect salt bridging because of a lack of soft water or salt is NOT being consumed, use a rubber mallet to pound on the outside of the plastic brine tank or pour some warm water around the inside edges of the salt tank to break up the bridging. Allow four (4) hours to produce a brine solution, then manually regenerate the conditioner. This should always be followed by allowing the unit to use up any remaining salt and then thoroughly cleaning out the brine tank.

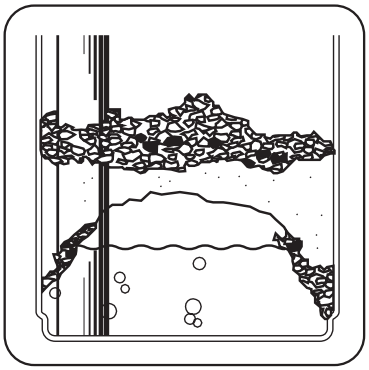

CLEANING OF YOUR BRINE OR SALT TANK

Salt tanks will build up sludge (undissolved salt) in the bottom that increases over time. Every 2 – 3 years the salt tank(s) should be cleaned out and restarted using the original start-up instructions.

CAUTION

Liquid brine will irritate eyes, skin, and open wounds. Gently wash the exposed area with fresh water. Keep children away from your water conditioner.

NOTICE

Incorrect start-up, water above the salt level (not enough salt in tank) will affect the unit's capacity and result in hardness slippage. Should either of these situations happen, or the unit fails to regenerate for any other reason, correct the problem first, then regenerate the unit manually. Regenerate two times in a row to restore the reserve capacity and bring the media bed back up to specification.

SYSTEM MAINTENANCE (CONTINUED)

RESIN CLEANER

An approved resin cleaner MUST be used on a monthly basis if your water supply contains iron. The amount of resin cleaner and frequency of use is determined by the quantity of iron in your water. Consult your dealer and follow the directions on the resin cleaner package.

Item #	Description
45127	Rust Out - 5 lb. Bottle
45128	Rust Out - 50 lb Pail (USA only)

Item #	Description
45147	ResCare - 1 gal. (128 oz) Bottle
80030022	ResCare - 64 oz Bottle (Easy Feeder Refill)

Item #	Description
55030010	Easy Feeder Starter Kit 1 oz & ½ oz wick with 64 oz of Rescare

Easy Feeder® Starter Kit Installation Instructions

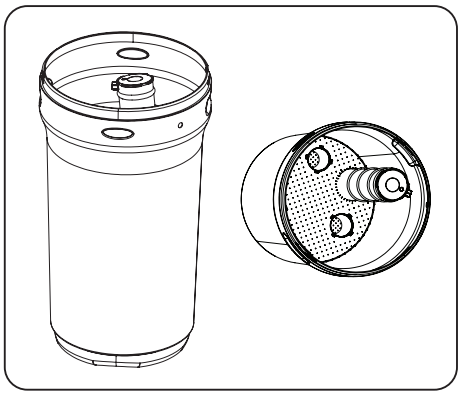

1. Install the grid and brine well inside the round tank.

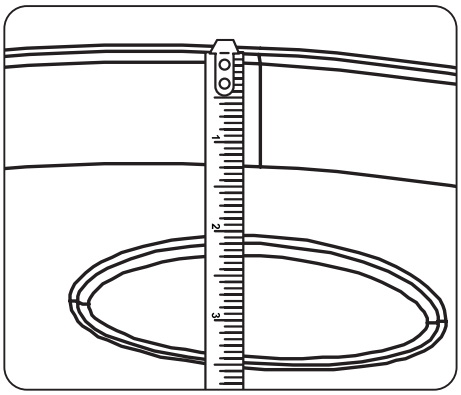

2. Measure 2 inches from the top of the tank beside the oblong molding.

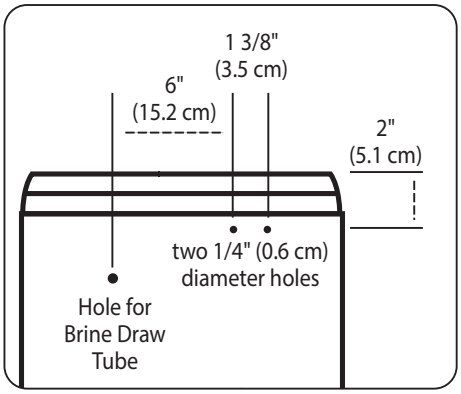

3. Mark the location of the 3 required holes.

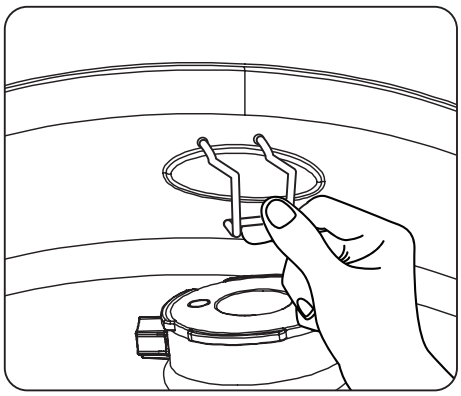

4. IInstall the holder and the Res Care Solution

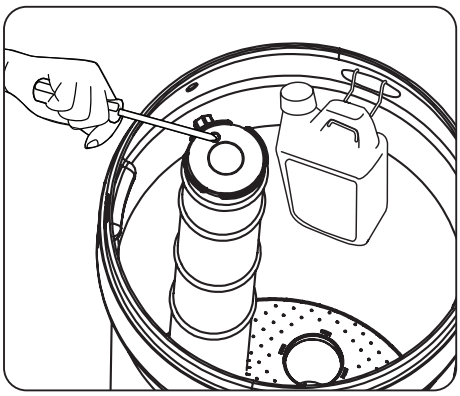

5. Take off the small hole cover on the Brine Well lid.

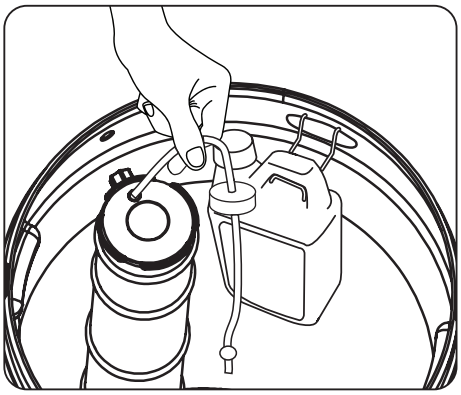

6. Take off the cover of the Res Care bottle. Insert the wick, making sure it touches the bottom of the bottle. Insert the other end of the tube completely into the hole in the brine well cap. Automatic feeding will start in a few hours.

NOTE

Remove appropriate wick assembly from box and submerge in water until wick is completely saturated (Soak minimum of 2 minutes).

SERVICING YOUR CONTROL VALVE

BEFORE SERVICING, YOU WILL NEED TO:

1. Shut the water supply to the conditioner OFF, put the conditioner into the BYPASS position.
2. Relieve water pressure in the conditioner by stepping the control into the backwash momentarily.
3. Return the control to the SERVICE position.
4. Unplug the electrical cord.
5. Disconnect the drain line connection.

Always follow these steps prior to servicing the valve.

CAUTION

RISK OF FLOOD
Disassembly while under pressure can result in flooding.

WARNING

RISK OF SHOCK
Unplug the unit before removing the cover or accessing any internal control parts.

SERVICING YOUR CONTROL VALVE (CONTINUED)

POWERHEAD REMOVAL

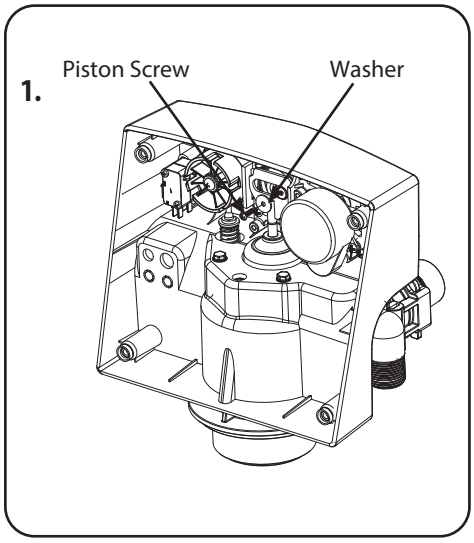

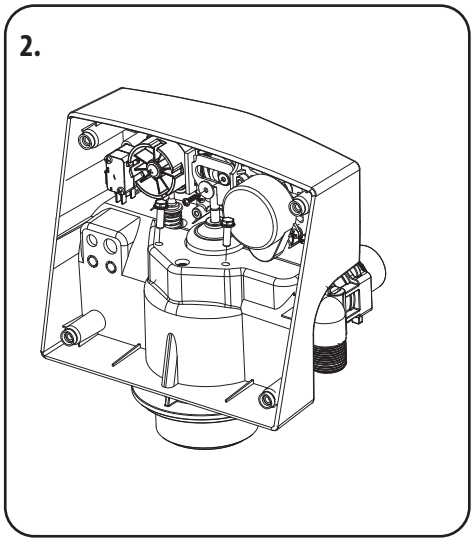

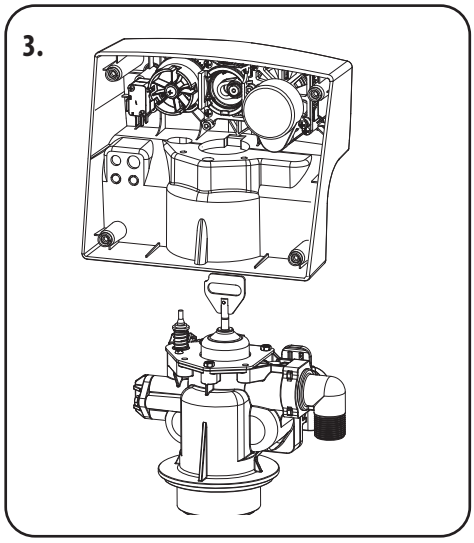

To remove the powerhead:

1. Remove screw & washer from piston rod link.

2. Remove two (2) bolts securing powerhead to body.

3. Remove powerhead from body.

INSPECTION & REPLACEMENT OF PISTON ASSEMBLY AND SEAL & SPACER KIT

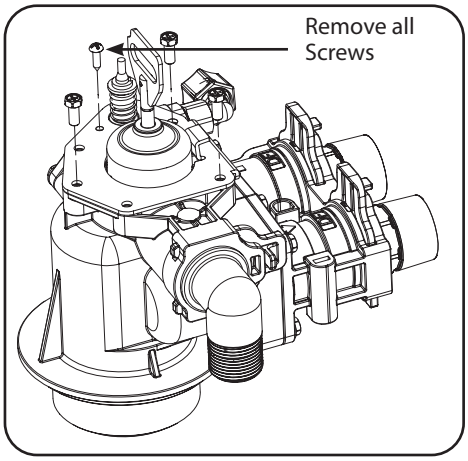

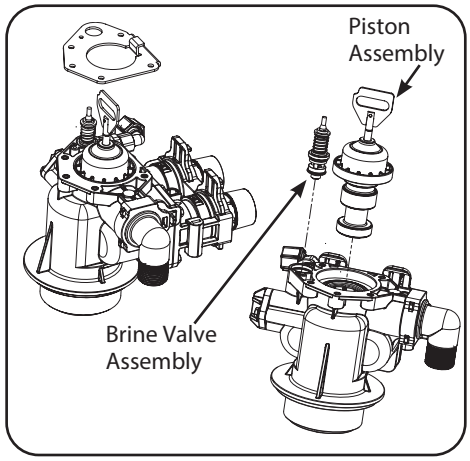

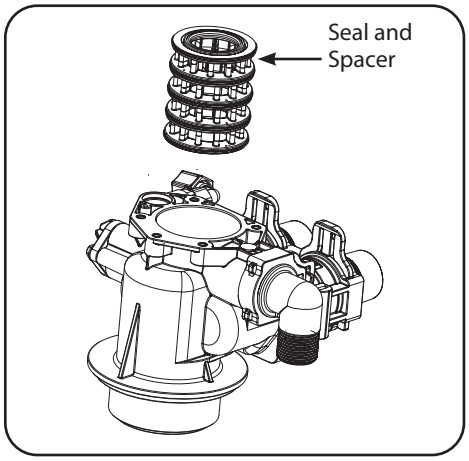

1. Follow steps 1 to 3 of Powerhead Removal above.

2. Remove four (4) screws from the plate on the valve body.

3. Remove the plate from the valve body and pull the piston assembly from the valve. The brine valve assembly can also be removed in this stage.

4. If only lubricating, remove the piston assembly, grease it with silicone lubricant (Part #92360) and put back in.

5. Replace seal and spacer set as shown. Place spacer in then a seal and repeat until finishing with a seal.

6. Lubricate the piston assembly with silicone lubricant (Part #92360) and then replace the Piston Assembly.

NOTICE

Do NOT use petroleum-based grease products during replacement and assembly.

SERVICING YOUR CONTROL VALVE (CONTINUED)

CLEAN INJECTOR ASSEMBLY

Sediment, salt, and silt will restrict or clog the injector. A clean water supply and pure salt will prevent this from happening. The injector assembly is located on the right side of the control valve when facing your conditioner.

The assembly is easy to clean, start by:

1. Shut the water supply to your conditioner OFF.
2. Reduce the pressure by opening a cold-treated tap.
3. Using a screwdriver, remove the two (2) screws holding the injector cover to the control valve body.
4. Carefully, remove the cover, and disassemble as shown below.
5. The injector orifice is removed from the valve body by carefully turning it out with a screwdriver.
6. Remove the injector throat the same way.
7. Carefully flush all parts including the screen.
8. Use a mild acid such as vinegar or Pro Rust Out to clean the small holes in the orifice and throat.
9. Reassemble by reversing the procedure.

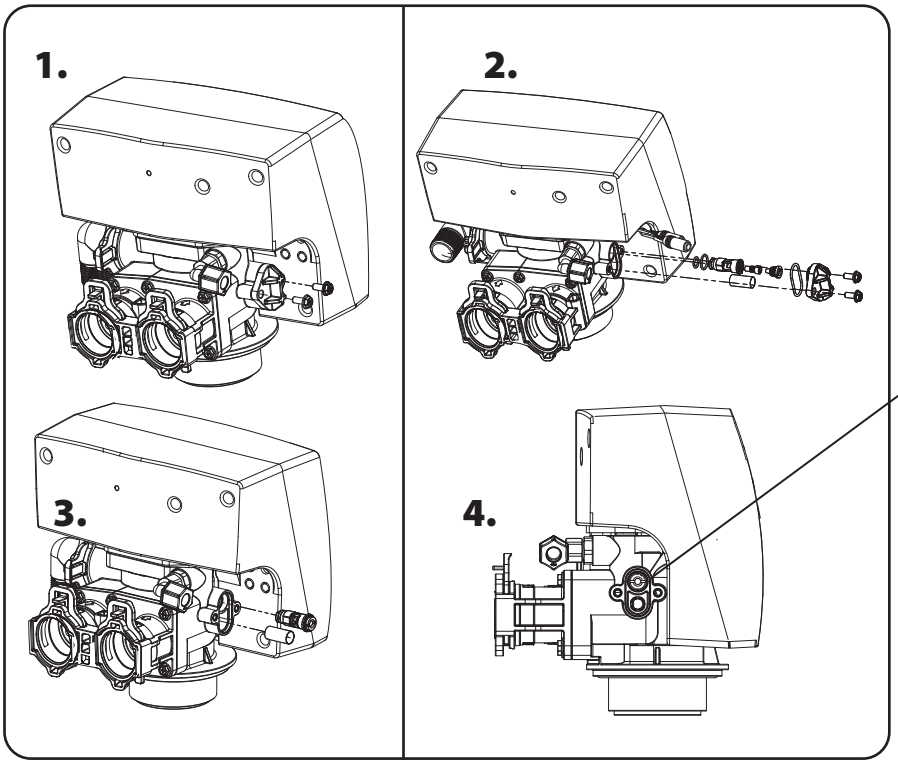

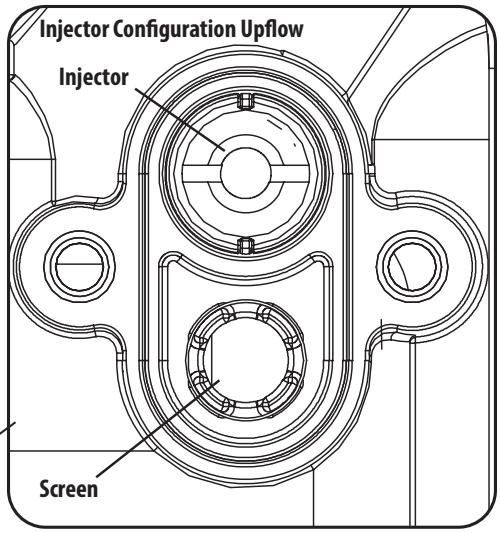

- Remove the two (2) screws of the injector cap.
- Pull the Injector Cap out.
- Remove the Injector Assembly, O-ring, and screen.
- Clean the injectors and replace the cap.
- Be sure to replace the O-rings when reassembling and lubricate with approved 100% silicone-based lubricant. Order part #92360.
- During final assembly be sure the injector is seated correctly as shown in figure above.

TROUBLESHOOTING GUIDE

NOTE

Before attempting any troubleshooting, be sure to test the water. The tests should include;
1. Raw water
2. Hot treated water
3. Cold treated water.

PROBLEM	POSSIBLE SOLUTIONS
1. CONDITIONER DELIVERS HARD WATER	
A. Bypass valve is open B. No salt in brine tank C. Injector or screen plugged D. Insufficient water flowing into brine tank E. Hot water tank hardness F. Leak at distributor tube G. Internal valve leak H. Flow meter jammed I. Flow meter cable disconnected or not plugged into meter cap J. Improper programming	A. Close bypass valve B. Add salt to brine tank and maintain salt level above water level C. Replace injectors and screen D. Check brine tank fill time and clean brine line flow tank control if plugged E. Make sure distributor tube is not cracked. Check O ring and tube pilot F. Make sure distributor tube is not cracked. Check O ring and tube pilot G. Replace seals and spacers and/or piston H. Remove obstruction from flow meter I. Check meter cable connection to timer and meter cap J. Reprogram the control to the proper regeneration type, inlet water hardness, capacity or flow meter size.
2. CONDITIONER FAILS TO REGENERATE	
A. Electrical service to unit has been interrupted B. Timer is not operating properly C. Defective valve drive motor D. Improper programming	A. Assure permanent electrical service (check fuse, plug, chain or switch) B. Replace timer C. Replace drive motor D. Check programming and reset as needed
3. UNIT USES TOO MUCH SALT	
A. Improper salt setting B. Excessive water in brine tank C. Improper programming	A. Check salt usage and salt setting B. See #7 C. Check programming and reset as needed
4. LOSS OF WATER PRESSURE	
A. Iron build-up in line to water conditioner B. Iron build-up in water conditioner C. Inlet of control plugged due to foreign material broken loose from pipes by recent work done on plumbing system.	A. Clean line to water conditioner B. Clean control and add resin cleaner to resin bed. Increase frequency of regeneration C. Remove piston and clean control
5. LOSS OF RESIN THROUGH DRAIN LINE	
A. Air in water system B. Drain line flow control is too large	A. Assure that well system has proper air eliminator control. Check for dry well condition. B. Ensure drain line flow control is sized
6. IRON IN CONDITIONED WATER	
A. Fouled resin bed B. Iron content exceeds recommended parameters	A. Check backwash, brine draw and brine tank fill. Increase frequency of regeneration. Increase backwash time. B. Add iron removal filter system
7. EXCESSIVE WATER IN BRINE TANK	
A. Plugged drain line flow control B. Brine valve failure C. Improper programming	A. Clean flow control B. Replace brine valve C. Check programming and reset as needed

TROUBLESHOOTING GUIDE (CONTINUED)

PROBLEM	POSSIBLE SOLUTIONS
8. SALT WATER IN SERVICE LINE	
A. Plugged injector system B. Timer not operating properly C. Foreign material in brine valve D. Foreign material in brine line flow control E. Low water pressure F. Improper programming	A. Clean injector and replace screen B. Replace timer C. Clean or replace brine valve D. Clean brine line flow control E. Raise water pressure F. Check programming and reset as needed
9. CONDITIONER FAILS TO DRAW BRINE	
A. Drain line flow control is plugged B. Injector is plugged C. Injector screen is plugged D. Line pressure is too low E. Internal control leak F. Improper programming G. Timer not operating properly	A. Clean drain line flow control B. Clean or replace injectors C. Replace screen D. Increase line pressure (line pressure must be at least 20 psi at all times) E. Change seals and spacers and/or piston assembly F. Check programming and reset as needed G. Replace timer
10. CONTROL CYCLES CONTINUOUSLY	
A. Timer not operating properly B. Faulty microswitches and/or harness C. Faulty cycle cam operation	A. Replace timer B. Replace faulty microswitch or harness C. Replace cycle cam or reinstall
11. DRAIN FLOWS CONTINUOUSLY	
A. Foreign material in control B. Internal control leak C. Control valve jammed in brine or backwash position D. Timer motor stopped or jammed teeth E. Timer not operating properly	A. Remove piston assembly and inspect bore. Remove foreign material and check control in various regeneration positions B. Replace seals and/or piston assembly C. Replace piston and seals and spacers D. Replace timer motor and check all gears for missing teeth E. Replace timer
12. (ERROR CODE) (ERROR E1) - ELECTRICAL TROUBLE SHOOTING:	
Issue1: When the controller is plugged, the buzzer beeps and the screen displays "System Error E1" **Cause:** The wire of micro switch is not plugged or loose.	Check the micro switch and connect the wire well.
13. (ERROR CODE) (ERROR E1) - ELECTRICAL TROUBLE SHOOTING:	
Issue2: The buzzer beeps and the screen displays "System Maintaining E1" **Cause:** The wire of micro switch is not plugged or loose.	Check the micro switch and connect the wire.
14. (ERROR CODE) (ERROR E2) - ELECTRICAL TROUBLE SHOOTING:	
Issue: The buzzer beeps and the screen displays "System Error E2" **Cause:** The motor can not find its right position, micro switch or motor malfunction, automatic circuit protection action.	Check the current of micro switch and motor.
15. (ERROR CODE) (ERROR E2) - ELECTRICAL TROUBLE SHOOTING:	
Issue 2: The buzzer beeps and the screen displayed " System Maintaining E2" **Cause:** The motor can not find its right position.	Replace Motor or PCB.

COMMON SPARE PARTS

Part Number	Description
60090026	Elbow, Inlet/Outlet, 1" NPT Comes with O-Ring
60090027	Straight, Inlet/Outlet, 1" NPT Comes with O-ring
60090040	Elbow, Drain line, 1/2" NPT Comes with O-Ring - For use with Rubber flow washers & Retainer.
60090029	Elbow, Drain line, 3/4" NPT Comes with O-Ring - For use with Rubber flow washers & Retainer.
60090030	Elbow, Drain line, 1" NPT Comes with O-Ring - For use with Rubber flow washers & Retainer.
60010773	Elbow, Drain,3/4",Comes with O-Ring. For use with Plastic Friction Fit Flow Washers.
60090028	Drain Line Hose Barb
60010227	Drain Line Red Clip
92387	Large Red Bypass Clip
60010069	Brine Line Red Clip
60010006	Bypass tool
60010052	Transformer 12 volt
60010382	Problem water injector kit
92360	100% silicone-based lubricant
99003	Media Funnel
80050083	HACH Water Hardness Test Strips 50 per bottle
92384	Upflow Piston Assembly
60010417	Brine Valve
92382	Seal & Spacer Kit

WARRANTY

89UF Dual Media Tank Residential Water Conditioner

NOTICE: THIS MANUAL CONTAINS A LIMITED WARRANTY. BY INSTALLING AND/OR USING THIS PRODUCT, YOU WAIVE CERTAIN LEGAL RIGHTS INCLUDING THE RIGHT TO SUE OR CLAIM COMPENSATION IN THE EVENT OF PROPERTY DAMAGE, INJURY AND/OR DEATH.

Products manufactured and assembled by Canature WaterGroup™ are warranted to do the work for which they are intended where properly installed, operated and maintained. Canature WaterGroup™ warrants each new residential water conditioner to be free from defects in materials and workmanship subject to the qualifications or exclusions below.

Residential Systems are defined by pressure tank size and / or the amount of resin or filter media contained in the tank. Residential systems use up to 13" [330 mm] diameter tanks and can contain up to 3.0 cubic feet [28.3 L] of resin or filter media.

Warranty on Control Valve and Parts:

Canature WaterGroup™ will replace or repair any part (except for Wear and Tear Items – Media, Piston, Seals and Brine Valve) which fails within seven (7) years from date of manufacture, as indicated by the serial number, provided the failure is due to a defect in material or workmanship. The only exception from the date of manufacture shall be proof of purchase or installation is provided and then the warranty period shall be from the date thereof.

Warranty on Mineral Tanks and Brine Tanks:

Canature WaterGroup™ will provide a replacement mineral tank or brine tank to any original equipment purchaser in possession of a tank that fails within the lifetime of the original owner, provided the failure is due to a defect in material or workmanship and that the water conditioner or filter is at all times operated in accordance with specifications provided in the Owner's Manual and not subject to freezing or vacuum.

Exclusions:

Damage to any part of this water conditioner or filter as a result of misuse, misapplication, neglect, alteration, accident, installation or operation contrary to our printed instructions, damage to ion exchange resin and seals caused by chlorine / chloramines in the water supply, damage to internal pistons and seals caused by wear and tear from iron, manganese, sediment and or silt, or damage caused by any force of nature is not covered in this warranty. At our sole discretion, we will repair or replace defective parts if our warranty department determines it to be defective under the terms of this warranty. Canature WaterGroup™ assumes no responsibility for consequential damage, labor or expense incurred as a result of a defect or failure. Media and Resin coverage is limited to the warranty provided by the original manufacturer.

As a manufacturer, we do not know the characteristics of your water supply. The quality of water supplies may vary seasonably or over a period of time. Your water usage may vary as well. Water characteristics can also change if the appliance is moved to a new location. For these reasons, we assume no liability for the determination of the proper equipment necessary to meet your requirements, and we do not authorize others to assume such obligation for us. Further, we assume no liability and extend no warranties, express or implied, for the use of this product with a non-potable water source or a water source which does not meet the conditions for use as described in the Owners Guide.

CANATURE WATERGROUP'S™ OBLIGATIONS UNDER THIS WARRANTY ARE LIMITED TO THE REPAIR OR REPLACEMENT OF THE FAILED PARTS OF THE WATER SOFTENING SYSTEM AND WE ASSUME NO LIABILITY WHATSOEVER FOR DIRECT, INDIRECT, INCIDENTAL, CONSEQUENTIAL, SPECIAL, GENERAL OR OTHER DAMAGES.

Return of Goods:

An authorization number must be obtained before returning any merchandise. NOTE: All material returned to Canature Watergroup must be returned freight prepaid. Upon inspection, if our warranty department determines the goods to be defective under the terms of this warranty, the warranty shall be limited to the defective parts to be repaired, replaced, or credited at Canature WaterGroup's discretion. You pay only freight to return defective parts to our factory and local dealer charges, including but not limited to labor charges, travel and transportation expenses, and handling fees.

Some State & Provincial jurisdictions do not allow limitations on how long an implied warranty lasts, so the above limitation may not apply to you. Similarly, some State & Provincial jurisdictions do not allow exclusion of incidental or consequential damages, so the above limitations or exclusions may not apply to you. This warranty gives you specific legal rights, and you may also have other rights, which vary from jurisdiction to jurisdiction. Consult your authorized Dealer for warranty and service information.