Installation, Maintenance, & Repair Series 009 and LF009

Reduced Pressure Zone Assemblies

Sizes: ¼" – 3" (8 – 80mm)

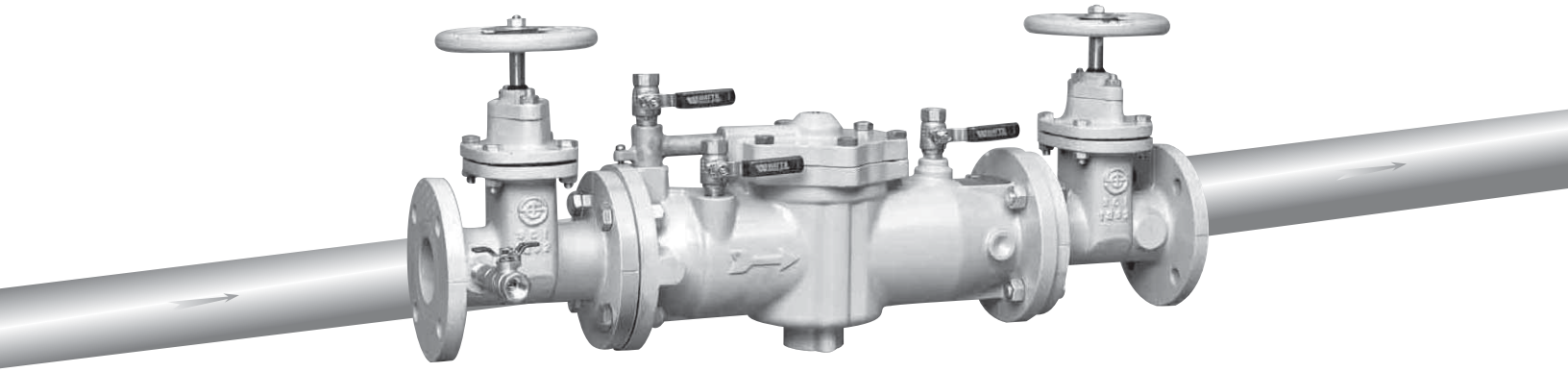

3" (80mm) 009NRS

⚠ WARNING

You are required to thoroughly read all installation instructions and product safety information before beginning the installation of this product. **FAILURE TO COMPLY WITH PROPER INSTALLATION AND MAINTENANCE INSTRUCTIONS COULD RESULT IN PRODUCT FAILURE WHICH CAN CAUSE PROPERTY DAMAGE, PERSONAL INJURY AND/OR DEATH.** Watts is not responsible for damages resulting from improper installation and/or maintenance.

Local building or plumbing codes may require modifications to the information provided. You are required to consult the local building and plumbing codes prior to installation. If this information is not consistent with local building or plumbing codes, the local codes should be followed.

Need for Periodic Inspection/Maintenance: This product must be tested periodically in compliance with local codes, but at least once per year or more as service conditions warrant. If installed on a fire suppression system, all mechanical checks, such as alarms and backflow preventers, should be flow tested and inspected in accordance with NFPA 13 and/or NFPA 25. Corrosive water conditions, and/or unauthorized adjustments or repair could render the product ineffective for the service intended. Regular checking and cleaning of the product's internal components helps assure maximum life and proper product function.

NOTE: For Australia and New Zealand, line strainers should be installed between the upstream shutoff valve and the inlet of the backflow preventer.

Testing

For field testing procedure, send for IS-TK-DP/DL, IS-TK-9A, IS-TK-99E AND IS-TK-99D.

For other repair kits and service parts, send for PL-RP-BPD.

For technical assistance, contact your local Watts representative.

WATTS®

Installation Instructions
Series 009 and LF009

Indoors – Figure 1

For indoor installations, it is important that the assembly be easily accessible to facilitate testing and servicing. If it is located in a line close to a wall, be sure the test cocks are easily accessible. A drain line and air gap (see literature ES-AG/EL/TC) should be piped from the relief valve connection as shown, where evidence of discharge will be clearly visible and so that water damage will not occur. Therefore, never install in concealed locations.

Outside – Figure 2

In an area where freezing conditions do not occur, Series 009 and LF009 can be installed outside. The most satisfactory installation is above ground and should be installed in this manner whenever possible.

In an area where freezing conditions can occur, Series 009 and LF009 should be installed above ground in an insulated enclosure.
Series 009 and LF009 must be installed in an accessible location to facilitate testing and servicing. A discharge line should be piped from the air gap at the relief valve connection making sure that there is adequate drainage. Never pipe the discharge line directly into a drainage ditch, sewer or sump. Series 009 and LF009 should never be installed where any part of the unit could become submerged in standing water.

It is generally recommended that backflow preventers never be placed in pits unless absolutely necessary and then only when approved by local codes. In such cases, a modified pit installation is preferred.

Parallel – Figure 3

Two or more smaller size assemblies can be piped in parallel (when approved) to serve a large supply pipe main. This type of installation is employed where increased capacity is needed beyond that provided by a single valve and permits testing or servicing of an individual valve without shutting down the complete line.

The number of assemblies used in parallel should be determined by the engineer's judgement based on the operating conditions of a specific installation.

For parallel valve installations, the total capacity of the assemblies should equal or exceed that required by the system.

Annual inspection of all water system safety and control valves is required and necessary. Regular inspection, testing and cleaning assures maximum life and proper product function.

Figure 1

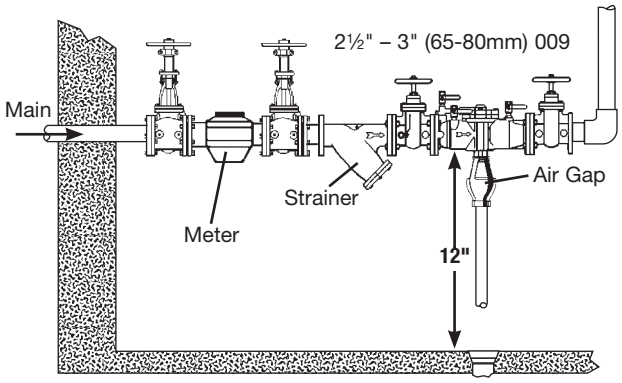

Figure 2

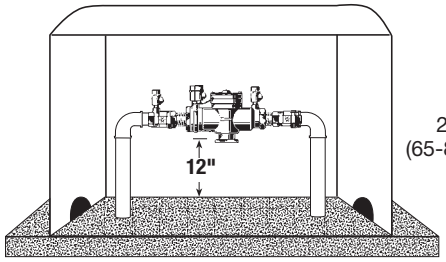

Now available, WattsBox Insulated Enclosures, for more information, send for literature ES-WB.

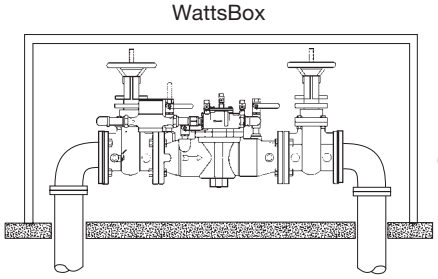

Now available, WattsBox Insulated Enclosures, for more information, send for literature ES-WB.

Figure 3

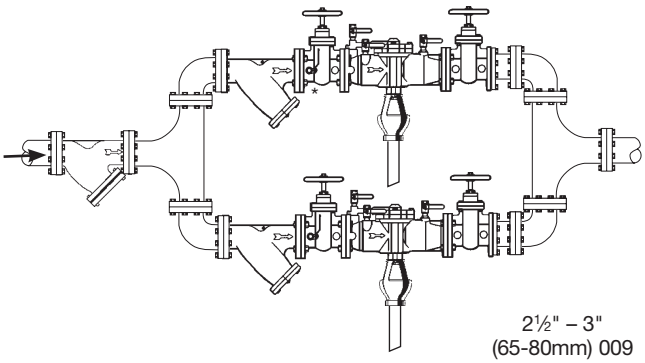

Installation Instructions
Series 009 and LF009

NOTE: Shutoff Valves: When shutoff valves are removed and reassembly is necessary, the shutoff valve with the test cock is to be mounted on the inlet side of the backflow preventer.

A. The 009 and LF009 should always be installed in an accessible location to facilitate testing and servicing (See page 2). **Check the state and local codes to ensure that the backflow preventer is installed in compliance, such as the proper height above the ground.**

B. We recommend a strainer be installed ahead of 009 and LF009 series assemblies to protect the internal components from unnecessary fouling.
CAUTION:
Do not install with strainer when backflow preventer is used on seldom-used water lines which are called upon only during emergencies, such as fire sprinkler lines.

Start Up: The downstream shutoff should be closed. Open upstream slowly and fill valve. When valve is filled, open the downstream shutoff slowly and fill the water supply system. This is necessary to avoid water hammer or shock damage.

C. Water discharge from the relief valve should be vented in accordance with code requirements. The relief valve should never be solidly piped into a drainage ditch, sewer or sump. The discharge should be terminated approximately 12" above the ground or through an air gap piped to a floor drain.

NOTE: Relief Valve Discharge Rates

The installation of an air gap with the drain line terminating above a floor drain will handle any normal discharge or nuisance spitting through the relief valve. However, floor drain size may need to be designed to prevent water damage caused by a catastrophic failure condition. Please refer to Figure No. 1 for maximum relief valve discharge rates, size and capacity of typical floor drains.

NOTE: Do not reduce the size of the drain line from the air gap fitting. Pipe full line size.

D. After initial installation, a discharge from the relief valve opening may occur due to inadequate initial flushing of pipe lines to eliminate dirt and pipe compounds. If flushing will not clear, remove the first check valve and clean thoroughly.

NOTE: Periodic relief valve discharge may occur on dead end service applications, such as boiler feed lines or cooling tower makeup lines due to fluctuating supply pressure during a static or no flow condition. To avoid this discharge, install a spring-loaded rubber seated check valve ahead of the backflow assembly to "lock-in" the downstream pressure.

E. Backflow preventers should never be placed in pits unless absolutely necessary and then only when and as approved by local codes. In such cases, provision should be made to always vent above flood level or for a pit drain to ensure an adequate air gap below the relief port.

F. It is important that Series 009 and LF009 backflow preventers be inspected periodically for any discharge from the relief valve which will provide a visual indication of need for cleaning or repair of check valves. Also testing for proper operation of the device should be made periodically in compliance with local codes, but at least once a year or more often, depending upon system conditions.

Relief vent will discharge water when, during no-flow periods, (1) the first check valve is fouled or (2) the inlet pressure to the device drops sufficiently due to upstream pressure fluctuations to affect the required operating differential between the inlet pressure and reduced pressure zone. Otherwise, such relief (spitting) can occur when the second check is fouled during emergency backflow or resulting from a water hammer condition. For troubleshooting guide send for S-TSG.

NOTE: Special considerations are necessary when testing assemblies installed on Fire Prevention Systems.

Fire Protection System Installations: The National Fire protection Agency (NFPA) Guidelines require a confirming flow test be conducted whenever a "main line" valve such as the shutoff valves or a backflow assembly have been operated. Certified testers of backflow assemblies must conduct this confirming test.

Figure 1

Relief Valve Discharge Rates

½" – 1" (15-25mm) 009

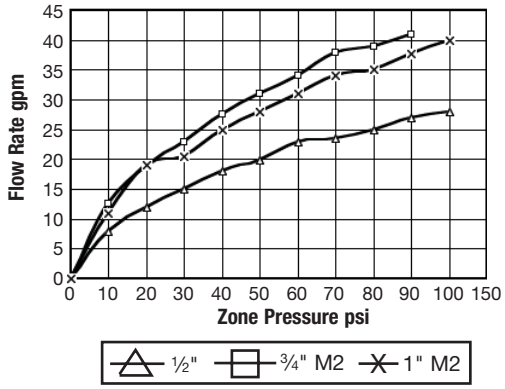

1¼" – 3" (32-80mm) 009

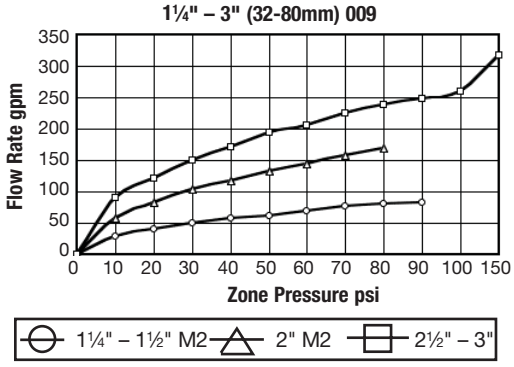

TYPICAL FLOW RATES AS SIZED BY FLOOR DRAIN MANUFACTURERS:

2" (50 mm) 55 GPM	5" (125 mm) 350 GPM
3" (80 mm) 112 GPM	6" (150 mm) 450 GPM
4" (100 mm) 170 GPM	8" (200 mm) 760 GPM

Servicing the Relief Valve

Series 009 and LF009

¼" – 1" (8 – 25mm)

1. Remove the relief valve cover bolts while holding the cover down.
2. Lift the cover straight off. The stem and diaphragm assembly will normally remain with the cover as it is removed. The relief valve spring will be free inside the body at this point.
3. The relief valve seat is located at the bottom of the body bore and can be removed, if necessary, for cleaning. The disc can be cleaned without disassembly of the relief valve module. If it is determined that the relief valve diaphragm and/or disc should be replaced, the relief valve module can be readily disassembled without the use of special tools. **NOTE:** the disc rubber is molded into the disc holder and is supplied as a disc holder assembly.
4. To re-assemble the relief valve, press the seat firmly into place in the body, center the spring on the seat, and insert the cover and relief valve module as a unit straight into the bore. Press down on the cover to assure proper alignment. Insert and tighten bolts.

CAUTION:

If cover will not press flat against body, stem assembly is crooked and damage can result. Re-align stem and cover before bolts are inserted.

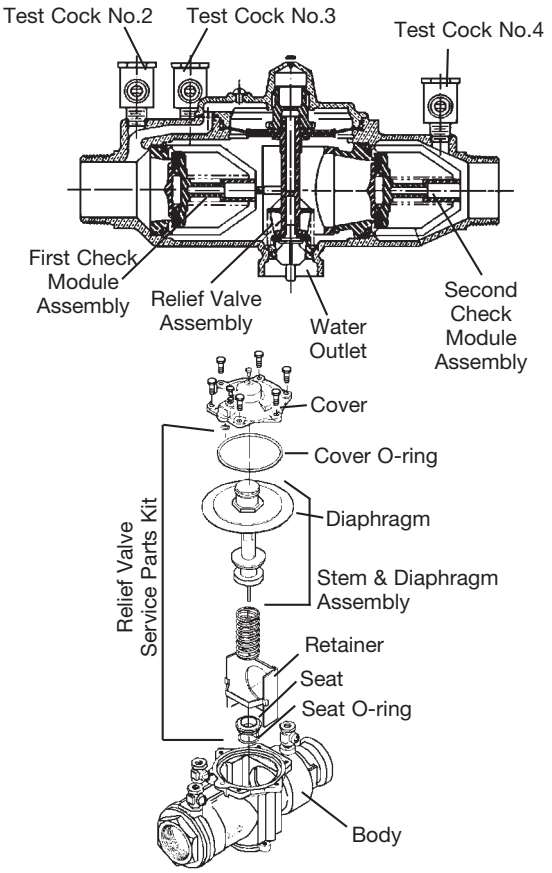

Repair Kits

¼" – 1" (8 - 25mm)

When ordering, specify Ordering Code, Kit number and Valve Size.

ORDERING CODE	KIT NO.	SIZE in.	SIZE mm
Total Repair Kits			
0887298	RK 009-T	¼ – ½	32-40
0888527	RK 009M3-T	¾	20
0887302	RK 009M2-T	¾	20
0887283	RK 009-T	¾ – 1	20-25
0887793	RK 009M2-T	1	25

LEAD FREE*

Kit consists of: Relief valve repair kit, first check repair kit, second check repair kit, retainer (if plastic)

***The wetted surface of this product contacted by consumable water contains less than one quarter of one percent (0.25%) of lead by weight.**

For additional information, contact your local technical sales representative, see back page.

Relief Valve Kits

¼" – 2" (8 – 50mm)

When ordering, specify Ordering Code, Kit number and Valve Size.

¼" – 1" (8 – 25mm)

ORDERING CODE	KIT NO.	SIZE in.	SIZE mm
Total Relief Valve Kits			
0887294	RK 009 VT	¼, ⅜, ½	8, 10, 15
0887509	RK SS009 VT	½	15
0887002	RK 009M2 VT	¾	20
0887520	RK SS009M2/M3 VT	¼ – ¾	8-20
0888524	RK 009M3 VT	¾	20
0887015	RK 009 VT	¾ – 1	20-25
0887503	RK SS009 VT	1	25
0887785	RK 009M2 VT	1	25

LEAD FREE* (first 5 rows) / LEAD FREE* (last 2 rows)

Kit consists of: Seat, Seat O-ring, Stem & diaphragm assembly, Stem O-ring, Cover O-ring and RV spring.

ORDERING CODE	KIT NO.	SIZE in.	SIZE mm
Relief Valve Rubber Parts Kits			
0887295	RK 009 RV	¼, ⅜, ½	8, 10, 15
0887510	RK SS009 RV	½	15
0886998	RK 009M2 RV	¾	20
0887519	RK SS009M2/M3 RV	¼ – ¾	8-20
0888523	RK 009M3 RV	¾	20
0887181	RK 009 RV	¾ – 1	20-25
0887529	RK SS009 RV	1	25
0887786	RK 009M2 RV	1	25

LEAD FREE* (first 5 rows) / LEAD FREE* (last 2 rows)

Kit consists of: Diaphragm, Disc assembly, Stem O-rings, Seat O-ring and Cover O-ring.

Total Rubber Parts Kits			
0887297	RK 009 RT	¼, ⅜, ½	8, 10, 15
0887511	RK SS009 RT	½	15
0886999	RK 009M2 RT	¾	20
0887521	RK SS009M2 RT	¾	20
0888526	RK 009M3 RT	¾	20
0888597	RK SS009M3 RT	¼ – ¾	8-20
0887182	RK 009 RT	¾ – 1	20-25
0887530	RK SS009 RT	1	25
0887787	RK 009M2 RT	1	25

LEAD FREE* (first 5 rows) / LEAD FREE* (last 2 rows)

Kit consists of: Diaphragm, Two discs, Two disc assemblies, Stem O-rings, Cover O-ring, Two seat O-rings and RV seat O-ring.

Cover Kits			
0887296	RK 009 C	¼ – ½	32-40
0794044	LFRK 009 C	¼ – ½	32-40
0887500	RK SS009 C	½	15
0887004	RK 009M2 C	¾	20
0888525	RK 009M3 C	¾	20
0887013	RK 009 C	¾ – 1	20-25
0887788	RK 009M2 C	1	25
0887501	RK SS009M2/M3 C	¼ – ¾	8-20
0794045	LFRK 009M3 C	¾	20
0887502	RK SS009 C	1	25
0794046	LFRK 009M2 C	1	25

LEAD FREE* (first 3 rows) / LEAD FREE* (last 5 rows)

Kit consists of: Cover and Cover O-ring.

Servicing the Relief Valve

Series 009 and LF009

1¼" – 2" (32 – 50mm)

1. Remove the relief valve cover bolts while holding the cover down.
2. Lift the cover straight off. The stem and diaphragm assembly will normally remain with the cover as it is removed. The relief valve spring will be free inside the body at this point.
3. The relief valve seat is located at the bottom of the body bore and can be removed, if necessary, for cleaning. The disc can be cleaned without disassembly of the relief valve module. If it is determined that the relief valve diaphragm and/or disc should be replaced, the relief valve module can be readily disassembled without the use of special tools. **NOTE:** the disc rubber is molded into the disc holder and is supplied as a disc holder assembly.
4. To re-assemble the relief valve, press the seat firmly into place in the body, center the spring on the seat, and insert the cover and relief valve module as a unit straight into the bore. Press down on the cover to assure proper alignment. Insert and tighten bolts.

   CAUTION:

   If cover will not press flat against body, stem assembly is crooked and damage can result. Re-align stem and cover before bolts are inserted.

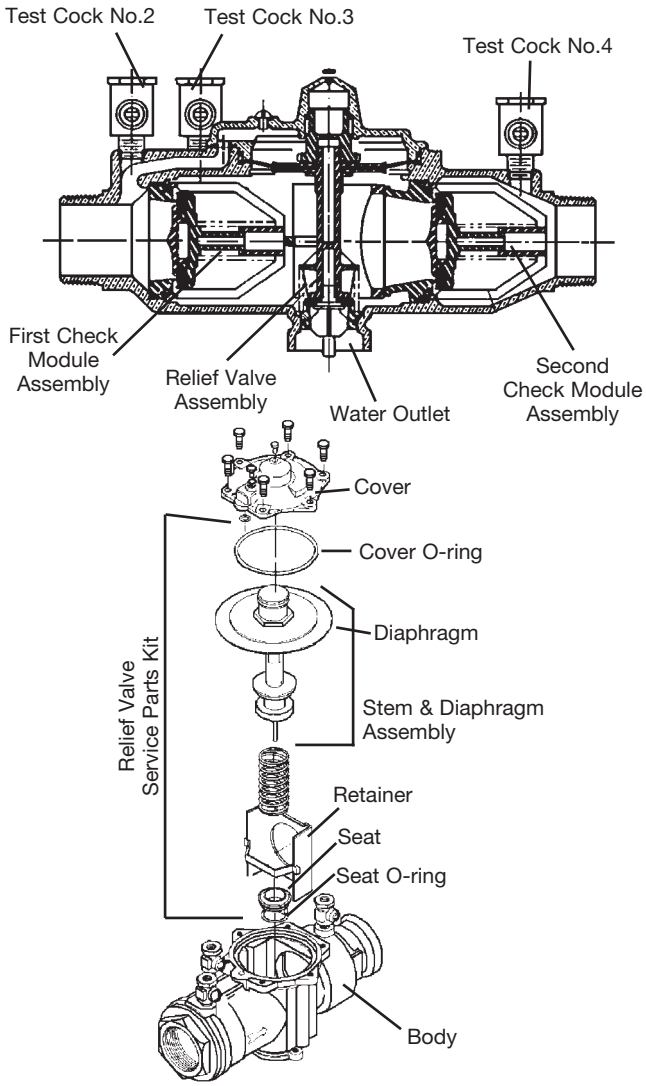

Repair Kits

1¼" – 2" (32 – 50mm)

	ORDERING CODE	KIT NO.	SIZE in.	SIZE mm
	Total Relief Kits			
LEAD FREE*	0887794	RK 009M2-T	1¼ – 1½	32-40
	0887284	RK 009-T	1¼ – 2	32-50
	0887269	RK 009M1-T	1¼ – 2	32-50

Kit consists of: Relief Valve Repair Kit, First Check Repair Kit, Second Check Repair Kit, Retainer (if plastic)

Repair Kits

	Relief Valve Total Kit			
LEAD FREE*	0887307	RK 009M2 VT	1¼ – 1½	32-40
	0887277	RK 009M1 VT	1¼ – 2	32-50
	0887016	RK 009 VT	1¼ – 2	32-50
LEAD FREE*	0887545	RK 009M2 VT	2	50

Kit consists of: RV assembly, Seat, Seat O-ring, Cover O-ring, Sensing passage O-ring and Upper stem O-ring.

	Relief Valve Rubber Parts Kit			
LEAD FREE*	0887306	RK 009M2 RV	1¼ – 1½	32-40
	0887276	RK 009M1 RV	1¼ – 2	32-50
	0887184	RK 009 RV	1¼ – 2	32-50
LEAD FREE*	0887544	RK 009M2 RV	2	50

Kit consists of: Diaphragm, Seat O-ring, Cover O-ring and Sensing passage O-ring.

	Complete Rubber Parts Kit			
LEAD FREE*	0887309	RK 009M2 RT	1¼ – 1½	32-40
	0887280	RK 009M1 RT	1¼ – 2	32-50
	0887185	RK 009 RT	1¼ – 2	32-50
LEAD FREE*	0887547	RK 009M2 RT	2	50

Kit consists of: Two check assembly O-rings, Two disc assemblies, One cover O-ring, One RV diaphragm, One RV seat O-ring, One sensing passage O-ring, One diaphragm plate O-ring, One RV lower stem O-ring, One RV upper stem O-ring, One RV disc assembly and One bleed screw O-ring.

	Cover Kit			
LEAD FREE*	0887308	RK 009M2 C	1¼ – 1½	32-40
	0794047	LFRK 009M2 C	1¼ – 1½	32-40
	0887278	RK 009M1 C	1¼ – 2	32-50
	0887014	RK 009 C	1¼ – 2	32-50
	0887546	RK 009M2 C	2	50
LEAD FREE*	0794048	LFRK 009M2 C	2	50

Kit consists of: Cover, Cover O-ring, Sensing passage O-ring, Bleed screw O-ring, Vent hood and Bleed screw.

*The wetted surface of this product contacted by consumable water contains less than 0.25% of lead by weight.

Servicing First & Second Check Valves

Series 009 and LF009

¼" – 1" (8 – 25mm)

1. Remove the retainer from the body bore. The check valve modules can now be removed from the valve by hand or with a screwdriver. **NOTE:** The seats and springs of the first and second check modules are not interchangeable. The heavier spring and smaller diameter seat belong with the first check module.
2. The check seats are attached to the cage with a bayonet type locking arrangement. Holding the cage in one hand, push the seat inward and rotate clockwise against the cage. The seat, spring cage, spring and disc assembly are now individual components.

   NOTE: ¾" M2 modules snap apart.
3. The disc assembly may now be cleaned and re-assembled or, depending on its condition, may be discarded and replaced with a new assembly from the repair kit. O-rings should be cleaned or replaced as necessary and lightly greased with the FDA approved grease. Refer to parts price list, PL-RP-BPD for more information.
4. Re-assemble the check valve modules. Check modules are installed in the valve body with the seat facing the valve inlet. The modules must be securely in place before the retainer can be replaced. On the ¾" size retainer may have to be tilted slightly into place. Replace relief valve assembly.

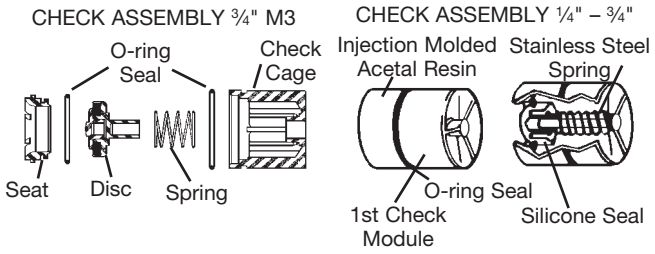

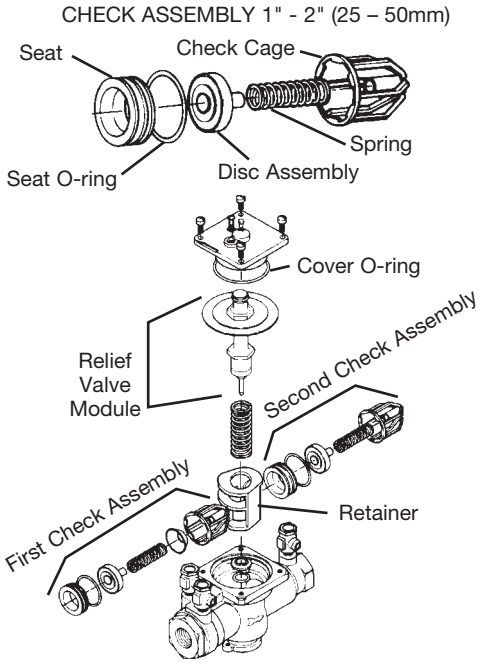

Check Valve Kits

¼" – 2" (8 – 50mm)

When ordering, specify Ordering Code, Kit number and Valve Size.

¼" – 1" (8 – 25mm)

ORDERING CODE	KIT NO.	SIZE in.	SIZE mm
First Check Kits			
0887291	RK 009 CK1	¼, ⅜, ½	8, 10, 15
0887505	RK SS009 CK1	½	15
0887000	RK 009M2 CK1	¾	20
0887515	RK SS009M3 CK1	¼ – ¾	8-20
0888520	RK 009M3 CK1	¾	20
0887005	RK 009 CK1	¾ – 1	20-25
0887009	RK 009 CK1SS	¾ – 1	20-25
0887525	RK SS009 CK1	1	25
0887789	RK 009M2 CK1	1	25
Kit consists of: Check assembly and Cover O-ring.			
Second Check Kits			
0887292	RK 009 CK2	¼, ⅜, ½	8, 10, 15
0887506	RK SS009 CK2	½	15
0887001	RK 009M2 CK2	¾	20
0887516	RK SS009M3 CK2	¼ – ¾	8, 10, 15
0888521	RK 009M3 CK2	¾	15
0887007	RK 009 CK2	¾ – 1	15-25
0887011	RK 009 CK2SS	¾ – 1	15-25
0887526	RK SS009 CK2	1	25
0887790	RK 009M2 CK2	1	25
Kit consists of: Check assembly and Cover O-ring.			

Watts reserves the right to change or modify product design, construction, specifications, or materials without prior notice and without incurring any obligation to make such changes and modifications on Watts products previously or subsequently sold.

For additional information, contact your local technical sales representative, see back page.

ORDERING CODE	KIT NO.	SIZE in.	SIZE mm
Check Rubber Parts			
0887293	RK 009 RC3	¼, ⅜, ½	8, 10, 15
0887003	RK 009M2 RC3	¾	20
0888522	RK 009M3 RC3	¾	20
0887507	RK SS009 RC1	½	15
0887517	RK SS009M2 RC1	¾	20
0888595	RK SS009M3 RC1	¼ – ¾	8-20
0887017	RK 009 RC1	¾ – 1	20-25
0887527	RK SS009 RC1	1	25
0887791	RK 009M2 RC1	1	25
0887508	RK SS009 RC2	½	15
0887518	RK SS009M2 RC2	¾	20
0888596	RK SS009M3 RC2	¼ – ¾	8-20
0887180	RK 009 RC2	¾ – 1	20-25
0887528	RK SS009 RC2	1	25
0887792	RK 009M2 RC2	1	25
Kit consists of: Disc, Cover O-ring and Seat O-ring.			
Retainers			
1047053	99AB47	¼, ⅜, ½	8, 10, 15
1047394	99BA47 M2-M3	¾	20
1047001	99FA47	1¼ – 2	32-50
1047001	99FA47 M1, 2" M2	1¼ – 2	32-50
1047401	99EA47 M2	1¼ – 1½	32-40

***The wetted surface of this product contacted by consumable water contains less than 0.25% of lead by weight.**

Servicing First & Second Check Valves

Series 009 and LF009

1¼" – 2" (32 – 50mm)

1. Remove the retainer from the body bore. The check valve modules can now be removed from the valve by hand or with a screwdriver. **Note:** The seats and springs of the first and second check modules are not interchangeable. The heavier spring and smaller diameter seat belong with the first check module.
2. The check seats are attached to the cage with a bayonet type locking arrangement. Holding the cage in one hand, push the seat inward and rotate clockwise against the cage. The seat, spring cage, spring and disc assembly are now individual components.

   Note: ¾" M2 modules snap apart.
3. The disc assembly may now be cleaned and re-assembled or, depending on its condition, may be discarded and replaced with a new assembly from the repair kit. O-rings should be cleaned or replaced as necessary and lightly greased with the FDA approved grease. Refer to parts price list, PL-RP-BPD for more information.
4. Re-assemble the check valve modules. Check modules are installed in the valve body with the seat facing the valve inlet. The modules must be securely in place before the retainer can be replaced. On the ¾" size retainer may have to be tilted slightly into place. Replace relief valve assembly.

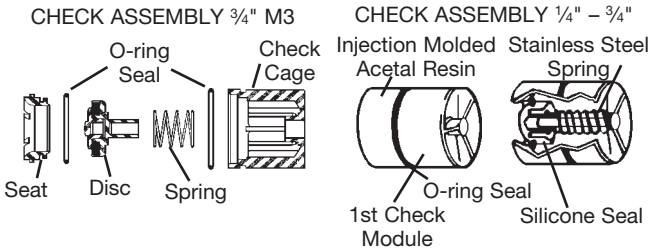

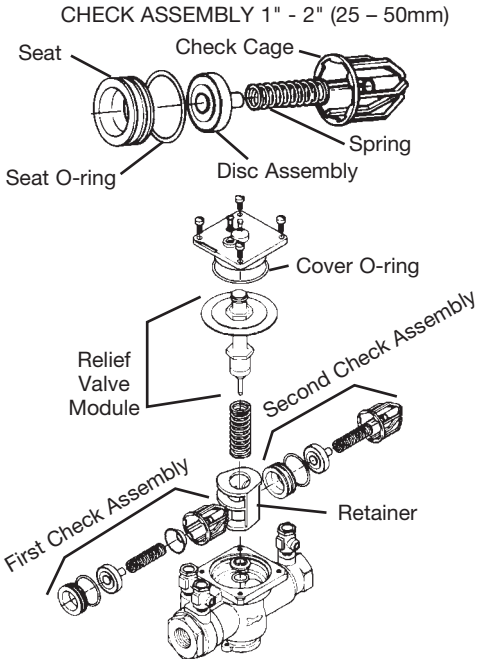

Check Valve Kits

1¼" - 2" (32 – 50mm)

ORDERING CODE	KIT NO.	SIZE in.	SIZE mm
First Check Kits			
0887300	RK 009M2 CK1	1¼ – 1½	32-40
0887270	RK 009M1 CK1	1¼ – 2	32-50
0887006	RK 009 CK1	1¼ – 2	32-50
0887010	RK 009 CK1SS	1¼ – 2	32-50
0887272	RK 009MI CK1SS	1¼ – 2	32-50
0887540	RK 009M2 CK1	2	50
Kit consists of: First check assembly, Cover O-ring and Sensing passage O-ring.			
Second Check Kit			
0887301	RK 009M2 CK2	1¼ – 1½	32-40
0887271	RK 009M1 CK2	1¼ – 2	32-50
0887008	RK 009 CK2	1¼ – 2	32-50
0887012	RK 009 CK2SS	1¼ – 2	32-50
0887273	RK 009 M1 CK2SS	1¼ – 2	32-50
0887541	RK 009M2 CK2	2	50
Kit consists of: Second check assembly, Cover O-ring and Sensing passage O-ring.			
First Check Rubber Parts Kit			
0887304	RK 009M2 RC1	1¼ – 1½	32-40
0887305	RK 009M2 RC2	1¼ – 1½	32-40
0887274	RK 009M1 RC1	1¼ – 2	32-50
0887275	RK 009M1 RC2	1¼ – 2	32-50
0887018	RK 009 RC1	1¼ – 2	32-50
0887183	RK 009 RC2	1¼ – 2	32-50
0887542	RK 009M2 RC1	2	50
0887543	RK 009M2 RC2	2	50
Kit consists of: First check assembly O-ring, Disc holder assembly, Cover O-ring and Sensing passage O-ring.			

LEAD FREE*

***The wetted surface of this product contacted by consumable water contains less than 0.25% of lead by weight.**

Servicing the Relief Valve

Series 009 and LF009

2½" – 3" (65 – 80mm)

1. Remove the four or six relief valve cover bolts while holding the cover down.
2. Lift the cover straight off. The stem and diaphragm assembly will normally remain with the cover as it is removed. The relief valve spring will be free inside the body at this point.
3. The relief valve seat is located at the bottom of the body bore, and can be removed, if necessary, for cleaning. The disc can be cleaned without disassembly of the relief valve module. If it is determined that the relief valve diaphragm and/or disc should be replaced, the relief valve module can be readily disassembled without the use of special tools.
   NOTE: The disc rubber is molded into the disc holder and is supplied as a disc holder assembly.
4. To reassemble the relief valve, press the seat firmly into place in the body, center the spring on the seat, and insert the cover and relief valve module as a unit straight into the bore. Press down on the cover to assure proper alignment. Insert and tighten bolts.
   CAUTION:
   If cover will not press flat against body, stem assembly is crooked and damage can result. Realign stem and cover before bolts are inserted.

   NOTE: No special tools required to service Series 009 2½" – 3" (65 – 80mm).

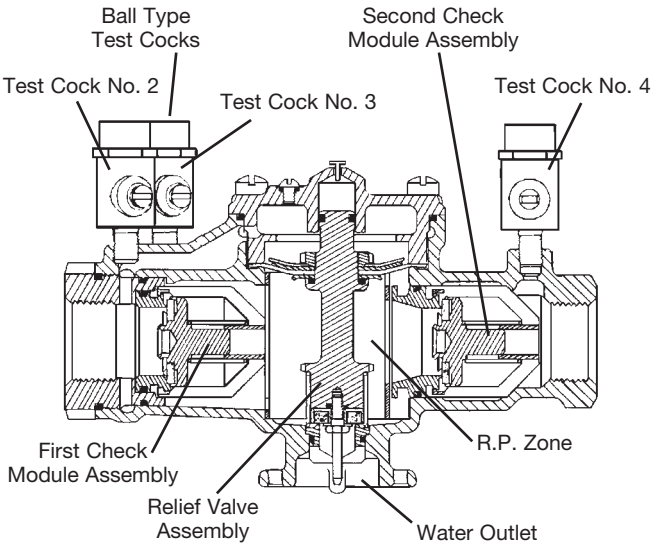

Relief Valve Kits

2½" – 3" (65 – 80mm)

When ordering, specify Ordering Code, Kit number and Valve Size.

ORDERING CODE	KIT NO.	SIZE in.	SIZE mm
Total Repair Kits			
0887795	RK 009M2-T	2	50
0887299	RK 009-T	2½ – 3	65-80

Kit consists of: Relief Valve Repair Kit, First Check Repair Kit, Second Check Repair Kit.

Repair Kits

Total Relief Valve Kit			
0887021	RK 009 VT	2½ – 3	65-80
0794052	LFRK 009 VT	2½ – 3	65-80

Kit consists of: Seat, Stem assembly, Spring, Two piston O-rings, Flow tube O-rings and Cover O-ring.

Relief Valve Rubber Parts			
0887206	RK 009 RV	2½ – 3	65-80
0794053	LFRK 009 RV	2½ – 3	65-80

Kit consists of: Diaphragm, Disc, Molded disc assembly, Piston O-ring, Stem O-ring and Cover O-ring.

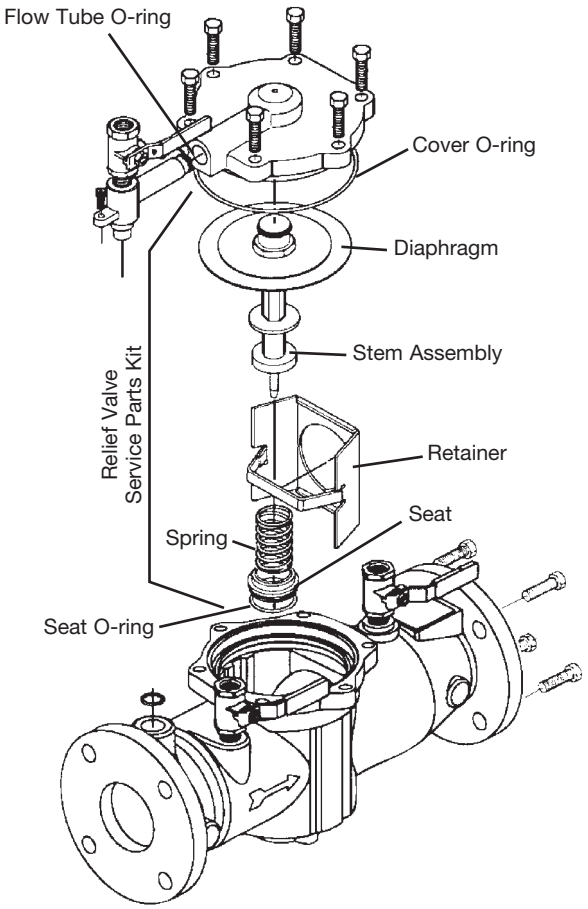

***The wetted surface of this product contacted by consumable water contains less than 0.25% of lead by weight.**

For additional information, contact your local technical sales representative, see back page.

Servicing First & Second Check Valves

Series 009 and LF009

2½" – 3" (65 – 80mm)

1. Remove the relief valve assembly as outlined on page 5.
2. Remove the retainer from the body bore. The check valve modules can now be removed from the valve by hand or with a screwdriver.

   NOTE: The seats and springs of the first and second check modules are not interchangeable. The heavier spring and smaller diameter seat belong with the first check module.
3. The check seats are attached to the cage with a bayonet type locking arrangement. Holding the cage in one hand, push the seat inward and rotate counterclockwise against the cage. The seat, spring cage, spring and disc assembly are now individual components.
4. The disc assembly may now be cleaned and reassembled or, depending on its condition, may be discarded and replaced with a new assembly from the repair kit. O-rings should be cleaned or replaced as necessary and lightly greased with the FDA approved silicon grease. For more information refer to repair parts price list PL-RP-BPD.
5. Reassemble the check valve modules. Check modules are installed in the valve body with the seat facing the valve inlet. The modules must be securely in place before the retainer can be replaced. Replace relief valve assembly.

   NOTE: No special tools required to service Series 009 2½" – 3" (65 – 80mm)

Check Assemblies

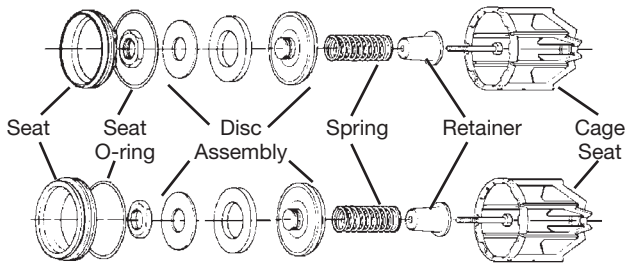

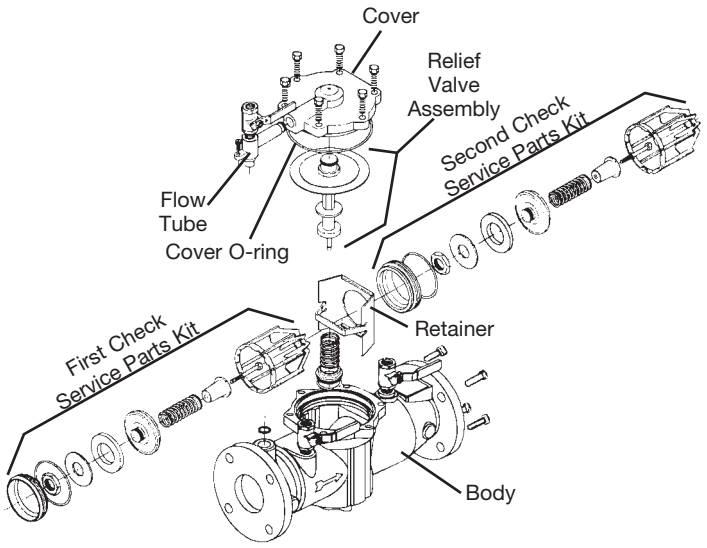

Total Repair Kits

2½" – 3" (65 – 80mm)

When ordering, specify Ordering Code, Kit number and Valve Size.

	ORDERING CODE	KIT NO.	SIZE in.	SIZE mm
Total Repair Kit				
LEAD FREE	0887795	RK 009M2-T	2	50
	0887299	RK 009-T	2½ – 3	65-80

Kit consists of: Relief Valve Repair Kit, First Check Repair Kit, Second Check Repair Kit.

Check Valve Kits

First Check Kit				
	0887019	RK 009 CK1	2½ – 3	65-80
LEAD FREE	0794054	LFRK 009 CK1	2½ – 3	65-80
Second Check Parts Kit				
	0887020	RK 009 CK2	2½ – 3	65-80
LEAD FREE	0794055	LFRK 009 CK2	2½ – 3	65-80

Kit consists of: Check assembly, Cover O-ring and Flow tube O-ring.

Check Rubber Parts Kit				
LEAD FREE	0887281	RK 009 RC1	2½ – 3	65-80
	0887205	RK 009 RC2	2½ – 3	65-80

Kit consists of: Disc, Seat O-ring and Flow tube O-ring.

Total Rubber Parts				
	0887207	RK 009 RT	2½ – 3	65-80
LEAD FREE	0794056	LFRK 009 RT	2½ – 3	65-80

Kit consists of: Diaphragm, Two discs, Two molded disc assemblies, Two seat O-rings, RV O-ring, Two piston O-rings, RV stem O-ring, Flow tube O-rings and Cover O-ring.

Cover Kit				
LEAD FREE	0887282	RK 009 C	2½ – 3	65-80

Kit consists of: Cover, Cover O-ring and Flow tube O-ring.

Check Seat Kit				
LEAD FREE	0887208	RK 009 S1	2½ – 3	65-80
	0887209	RK 009 S2	2½ – 3	65-80

Kit consists of: Check seat, Seat O-ring and Cover O-ring.

***The wetted surface of this product contacted by consumable water contains less than 0.25% of lead by weight.**

Troubleshooting Guide

Series 009 and LF009

Symptom	Cause	Solution
1. Check valve fails to hold 1.0 PSID minimum	a. Debris on check disc sealing surface	Disassemble and clean
	b. Leaking gate valve	Disassemble and clean or repair
	c. Damaged seat disc or seat o-ring	Disassemble and replace
	d. Damaged guide holding check open	Disassemble clean or replace
	e. Weak or broken spring	Disassemble and replace spring
2. Chatter during flow conditions	a. Worn, damaged or defective guide	Disassemble and repair or replace guide
3. Low flows passing through mainline valve	a. Mainline check fouled	Disassemble and clean
	b. Meter strainer plugged	Disassemble and clean
	c. Damaged mainline seat disc or seat	Disassemble and replace
	d. Broken mainline spring	Disassemble and replace

For additional cross-connection control information, send for F-50 brochure.

NOTES

CALIFORNIA PROPOSITION 65 WARNING

WARNING: This product contains chemicals known to the State of California to cause cancer and birth defects or other reproductive harm.

(California law requires this warning to be given to customers in the State of California.)

For more information: www.watts.com/prop65

Limited Warranty: Watts Regulator Co. (the "Company") warrants each product to be free from defects in material and workmanship under normal usage for a period of one year from the date of original shipment. In the event of such defects within the warranty period, the Company will, at its option, replace or recondition the product without charge.

THE WARRANTY SET FORTH HEREIN IS GIVEN EXPRESSLY AND IS THE ONLY WARRANTY GIVEN BY THE COMPANY WITH RESPECT TO THE PRODUCT. THE COMPANY MAKES NO OTHER WARRANTIES, EXPRESS OR IMPLIED. THE COMPANY HEREBY SPECIFICALLY DISCLAIMS ALL OTHER WARRANTIES, EXPRESS OR IMPLIED, INCLUDING BUT NOT LIMITED TO THE IMPLIED WARRANTIES OF MERCHANTABILITY AND FITNESS FOR A PARTICULAR PURPOSE.

The remedy described in the first paragraph of this warranty shall constitute the sole and exclusive remedy for breach of warranty, and the Company shall not be responsible for any incidental, special or consequential damages, including without limitation, lost profits or the cost of repairing or replacing other property which is damaged if this product does not work properly, other costs resulting from labor charges, delays, vandalism, negligence, fouling caused by foreign material, damage from adverse water conditions, chemical, or any other circumstances over which the Company has no control. This warranty shall be invalidated by any abuse, misuse, misapplication, improper installation or improper maintenance or alteration of the product.

Some States do not allow limitations on how long an implied warranty lasts, and some States do not allow the exclusion or limitation of incidental or consequential damages. Therefore the above limitations may not apply to you. This Limited Warranty gives you specific legal rights, and you may have other rights that vary from State to State. You should consult applicable state laws to determine your rights. **SO FAR AS IS CONSISTENT WITH APPLICABLE STATE LAW, ANY IMPLIED WARRANTIES THAT MAY NOT BE DISCLAIMED, INCLUDING THE IMPLIED WARRANTIES OF MERCHANTABILITY AND FITNESS FOR A PARTICULAR PURPOSE, ARE LIMITED IN DURATION TO ONE YEAR FROM THE DATE OF ORIGINAL SHIPMENT.**

WATTS®

ISO 9001-2008 CERTIFIED

A Watts Water Technologies Company

USA: Tel: (978) 688-1811 • Fax: (978) 794-1848 • www.watts.com

Canada: Tel: (905) 332-4090 • Fax: (905) 332-7068 • www.wattscanada.ca

RP/IS-009 1145 EDP# 1911300

© 2012 Watts