PRG-SERIES

Grinder Pump

Liberty Pumps®

A Family and Employee Owned Company

ProVore®

1 hp

2" Discharge

Designed for sewage applications

Higher flow rates allow use with 2" discharge lines

Operates on standard 115V or 230V 20A circuits

Features

- Heavy cast iron construction
- 115V or 230V 1-phase
- V-Slice® Cutter Technology
- Shreds difficult solids such as feminine products, rags, towels, and wipes that can jam a solids handling style pump
- Hardened stainless steel cutter and plate
- Oil-filled, thermally protected motor
- PRG-Series grinders can be used as a replacement pump in 2" discharge systems using LE40 and LE50-Series solids handling pumps.*

**Consult factory with actual application and head specifications prior to replacing LE40 and LE50-Series pumps.*

POWDER COATED TOUGH™

3 Year Warranty

Model PRG101A

Patent: See LibertyPumps.com/patents

Vertical Float Switch Model PRG101AV

SSPMA CERTIFIED

C SP US

Submersible Wastewater Pump Association swpa MEMBER

innovate. evolve.

PRG-Series

Impeller

Cast iron, Class 25 vortex style

Paint

Powder coat

Max Fluid Temperature

140°F (60°C) Intermittent
104°F (40°C) Continuous duty

Motor Specifications

1 hp 12A (115V) 6A (230V)
CSCR style, Class B windings
Oil-filled, thermally protected

Power Cord Type

SJTW Quick-connect design
10' Standard length (25' and 50' optional)

Motor Housing

Class 25 cast iron

Shaft

303 Series stainless steel

Volute

Class 25 cast iron

V-Slice® Cutter Technology

Shreds difficult solids such as feminine products, wipes, rags, and other debris.

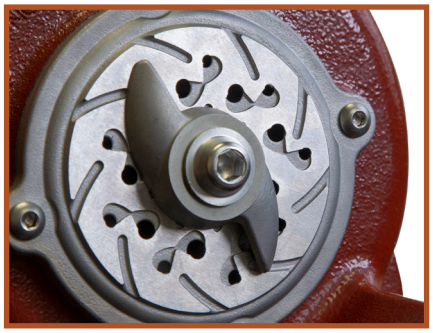

440 Series stainless steel hardened to Rockwell 57c

Patent: See LibertyPumps.com/patents

Hardware

Stainless steel

Mechanical Shaft Seal

Unitized graphite impregnated silicon carbide

Bearings

Upper and lower ball bearings

Float Switch (automatic models)

Mechanical wide-angle float switch with series (piggyback) plug

Dimensional Data

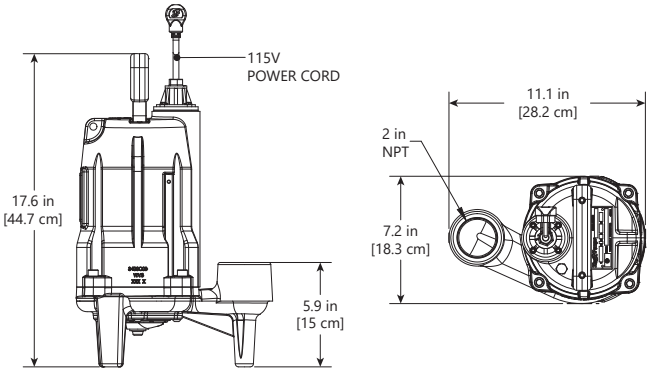

Performance Curve

60 Hz, 3450 RPM

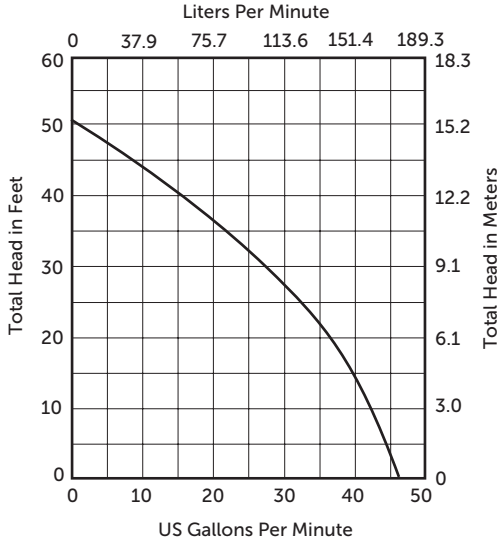

Models

MODEL	HP	VOLTS	PHASE	Hz	AMPS	CORD LENGTH IN FEET	DISCHARGE	AUTOMATIC	WEIGHT IN LBS
PRG101A	1	115	1	60	12	10	2"	Wide-Angle	58
PRG101AV	1	115	1	60	12	10	2"	Vertical Float Switch	58
PRG101M	1	115	1	60	12	10	2"	No	57
PRG102A	1	230	1	60	6	10	2"	Wide-Angle	58
PRG102M	1	230	1	60	6	10	2"	No	57

For optional 25' power cords, add a "-2" suffix to model number. Example: PRG101A-2
For optional 50' power cords (manual models only), add a "-5" suffix to model number. Example: PRG101M-5
Consult factory for 50' automatic power cord options.

Specifications subject to change without notice.

Copyright © Liberty Pumps, Inc. 2025 All rights reserved. LLIT006710-R07/25

Liberty Pumps - 7000 Apple Tree Avenue - Bergen, New York 14416
Phone 800-543-2550 - Fax 585-494-1839 - www.LibertyPumps.com