FIGURE IS4CTCAP - IS6CTCAP
STAINLESS STEEL FITTINGS

304 & 316 STAINLESS STEEL THREADED ROUND CAP - MSS SP114

PRODUCT SPECIFICATIONS

- Materials: Certified to ASTM A351/A351M
- Thread: Certified to ASME B1.20.1 - 1983
- Dimension: Certified to MSS-SP114
- Casting Parts Tolerance: Certified to GB/T6414-1999 CT-6



REFERENCE CHART

Item #	Size (in.)	P	B	E	G	G1	H	Grade
IS4CTCAPSP114A	1/8	0.689	0.264	0.213	0.091	0.098	0.768	304
IS4CTCAPSP114B	1/4	0.689	0.331	0.213	0.091	0.098	0.850	304
IS4CTCAPSP114C	3/8	0.823	0.370	0.220	0.098	0.110	1.024	304
IS4CTCAPSP114D	1/2	0.945	0.441	0.264	0.098	0.130	1.220	304
IS4CTCAPSP114F	3/4	1.071	0.512	0.283	0.118	0.138	1.476	304
IS4CTCAPSP114G	1	1.323	0.591	0.311	0.130	0.157	1.783	304
IS4CTCAPSP114H	1-1/4	1.634	0.681	0.350	0.142	0.177	2.165	304
IS4CTCAPSP114J	1-1/2	1.634	0.717	0.382	0.150	0.197	2.441	304
IS4CTCAPSP114K	2	1.760	0.768	0.433	0.169	0.220	2.972	304
IS4CTCAPSP114L	2-1/2	2.012	0.933	0.492	0.209	0.264	3.327	304
IS4CTCAPSP114M	3	2.264	0.992	0.563	0.228	0.303	4.016	304
IS4CTCAPSP114P	4	2.539	1.094	0.689	0.260	0.378	5.098	304
IS6CTCAPSP114A	1/8	0.689	0.264	0.213	0.091	0.098	0.768	316
IS6CTCAPSP114B	1/4	0.689	0.331	0.213	0.091	0.098	0.850	316
IS6CTCAPSP114C	3/8	0.823	0.370	0.220	0.098	0.110	1.024	316
IS6CTCAPSP114D	1/2	0.945	0.441	0.264	0.098	0.130	1.220	316
IS6CTCAPSP114F	3/4	1.071	0.512	0.283	0.118	0.138	1.476	316
IS6CTCAPSP114G	1	1.323	0.591	0.311	0.130	0.157	1.783	316
IS6CTCAPSP114H	1-1/4	1.634	0.681	0.350	0.142	0.177	2.165	316
IS6CTCAPSP114J	1-1/2	1.634	0.717	0.382	0.150	0.197	2.441	316
IS6CTCAPSP114K	2	1.760	0.768	0.433	0.169	0.220	2.972	316
IS6CTCAPSP114L	2-1/2	2.012	0.933	0.492	0.209	0.264	3.327	316
IS6CTCAPSP114M	3	2.264	0.992	0.563	0.228	0.303	4.016	316
IS6CTCAPSP114P	4	2.539	1.094	0.689	0.260	0.378	5.098	316

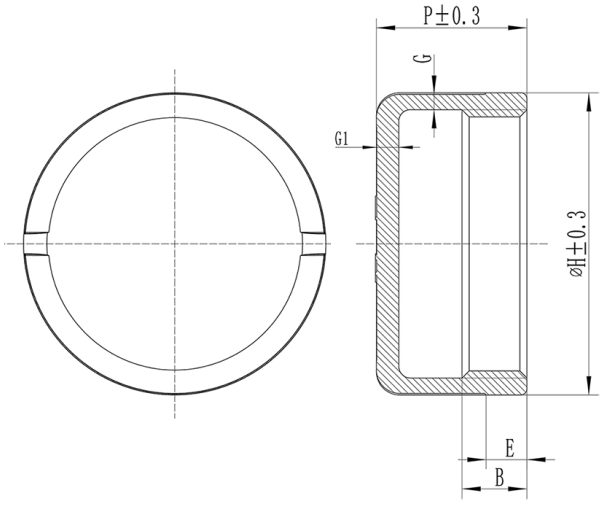

Tolerance
0 ≤ size < 0.984 = ± 0.0114
0.984 ≤ size < 3.937 = ± 0.015
3.937 ≤ size < 15.748 = ± 0.022

©2026 Ferguson Enterprises, LLC 1126 10156296

We reserve the right to modify or improve the designs or specifications of our products at any time without notice.