Claude™ | K-39311

18'' x 36'' rectangular framed mirror

Features

- Designed in collaboration with Studio McGee
- Clean and timeless design allows for use in any interior space
- Mounts vertically or horizontally depending on the look you want to create
- Frame maintains a durable, long-lasting finish
- Coordinates with Studio McGee collections and KOHLER® faucets and lighting products



Available Colors/Finishes

Color tiles intended for reference only.

	CP	Polished Chrome
	SN	Vibrant Polished Nickel
	BN	Vibrant Brushed Nickel
	BL	Matte Black
	2MB	Vibrant Brushed Moderne Brass

1-800-4KOHLER (1-800-456-4537)
Kohler Co. reserves the right to make revisions without notice to product specifications.
For the most current specification sheet, go to www.kohler.com USA or www.kohler.ca Canada.
3-27-2026 20:2 - US-CA

THE BOLD LOOK OF KOHLER®

Codes/Standards

ANSI Z97.1 (Tempered Glass)
CPSC 16CFR 1201

Technical Information

All product dimensions are nominal.

Lighting Included:	No
Mirror Type:	Polished Edge

Material

- Premium metal and mirrored glass construction
- KOHLER finishes resist corrosion and tarnishing

Warranty

See website for detailed warranty information.

KOHLER® One-Year Limited Warranty

1-800-4KOHLER (1-800-456-4537)
Kohler Co. reserves the right to make revisions without notice to product specifications.
For the most current specification sheet, go to www.kohler.com USA or www.kohler.ca Canada.
3-27-2026 20:2 - US-CA

THE BOLD LOOK OF KOHLER.

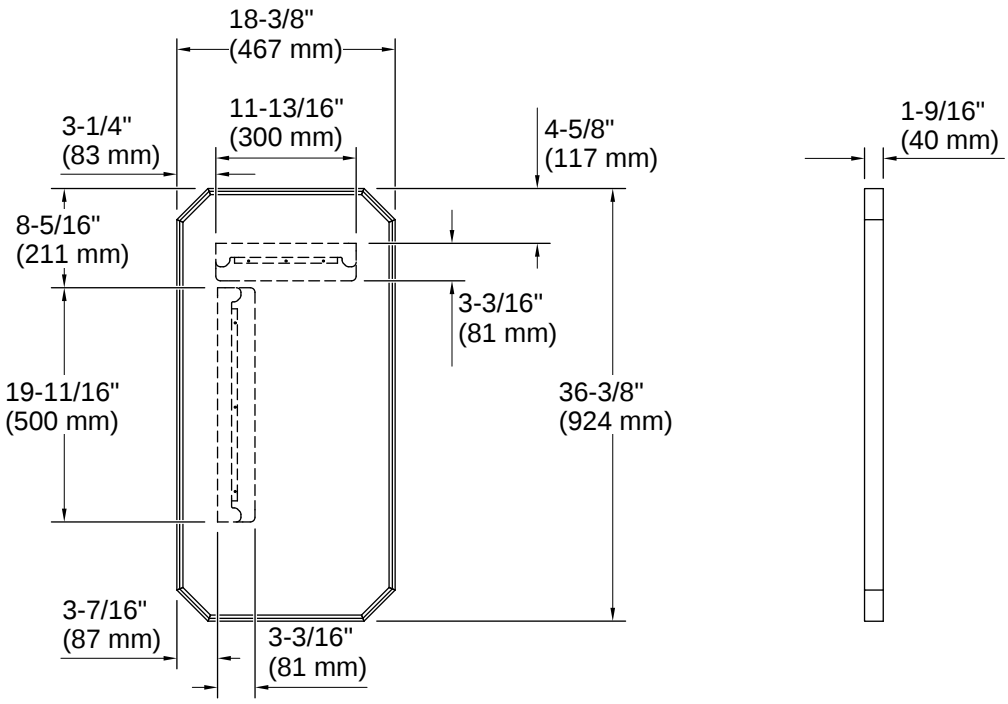

Installation

- Mounting kit ensures quick and easy installation

Installation Notes

Install this product according to the installation instructions.

1-800-4KOHLER (1-800-456-4537)
Kohler Co. reserves the right to make revisions without notice to product specifications.
For the most current specification sheet, go to www.kohler.com USA or www.kohler.ca Canada.
3-27-2026 20:2 - US-CA

THE BOLD LOOK OF KOHLER.