300 S. DAYTON ST.
DAVISON, MI 48423
PH: 810-503-9000
FAX:810-653-8714

1070-44

DESCRIPTION:
CONNECTS 4 IN. CORR. TO 4 IN. PLASTIC

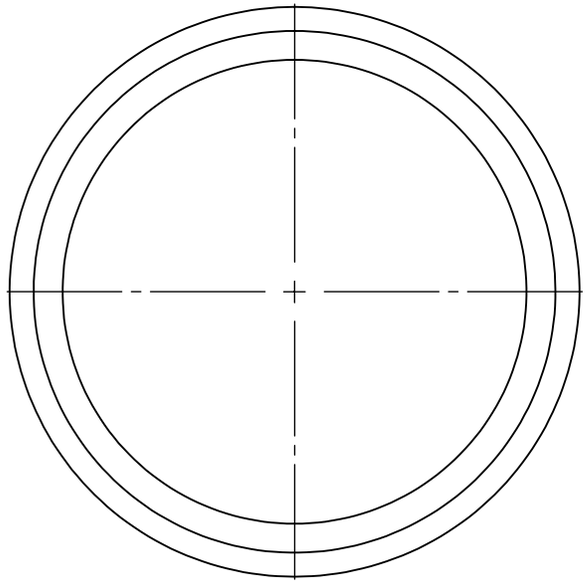

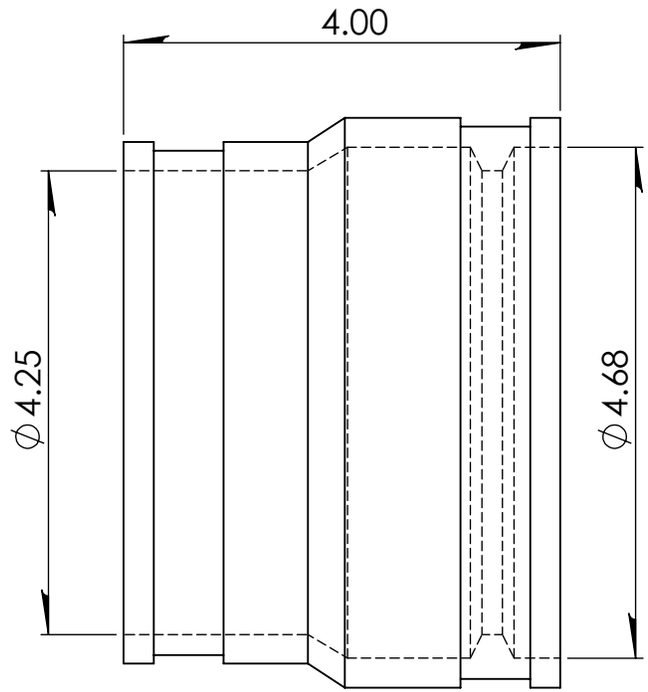

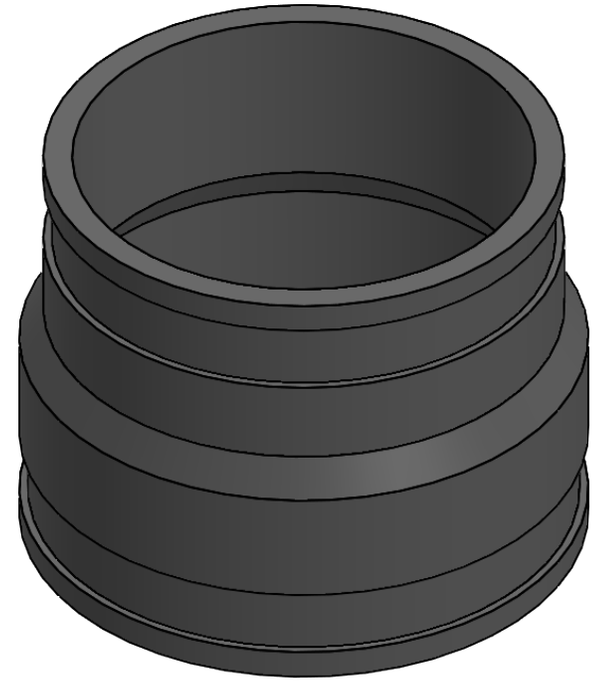

NOTE:

PROPRIETARY AND CONFIDENTIAL
THE INFORMATION CONTAINED IN THIS DRAWING IS THE SOLE PROPERTY OF FERNCO, INC. ANY REPRODUCTION IN PART OR AS A WHOLE WITHOUT THE WRITTEN PERMISSION OF FERNCO, INC. IS PROHIBITED.

TOLERANCES:
FRACTIONAL ± 1/4"
.XX= ±.06
ANG.= ±3°
UNLESS OTHERWISE SPECIFIED

MATERIAL	PVC	CLAMPS USED	300 SERIES STAINLESS	UNITS: INCHES	SIZE: A
PART WEIGHT		INSTALLATION TORQUE	60 IN · LBS	AUTHOR: ELI MILLER	SCALE: NOT TO SCALE
BOX QUANTITY		MIN/MAX TEMP.	-30/140 °F	3RD ANGLE PROJECTION DO NOT SCALE DRAWING	CHECKER:
PRESSURE TESTED		ASTM	C1173 / D5926	DATE: 12/11/2018	SHEET 1 OF 1