COMMERCIAL-GRADE

Residential Gas Water Heaters

PREMIER® VERSATILE POWER DIRECT VENT

UP TO 0.88 UNIFORM ENERGY FACTOR (96% THERMAL EFFICIENCY)

Today's homes demand more hot water than ever before, and the high efficiency Premier® power direct vent gas water heaters offer unprecedented levels of performance to meet the need. The fully condensing Premier® design is so advanced, it can deliver "continuous hot water for shower after shower" at a constant flow of over 4 gallons per minute.

AiQ™ ADAPTIVE GAS CONTROL

- Smart Combustion system includes gas valve with servo motor and electronic controller
- Improves combustion and light off
- Adjusts to fuel qualities or abnormalities
- Can run on natural gas or liquid propane, gas type selected via touch screen upon installation

CONDENSING DESIGN

- High efficiency operation with up to 0.88
- Uniform Energy Factor (96% thermal efficiency) to save money on operating costs
- Equipped with condensate drain tee

LEAK DETECTION MODULE

HELICAL INTERNAL HEAT EXCHANGER

- Spiral heat exchanger keeps hot combustion gases in the tank longer to lengthen the heat transfer cycle

POWER DIRECT VENT DESIGN

- Combined vertical and horizontal runs terminating through an outside wall. Vents using PVC, CPVC, or polypropylene pipe. Canadian installations require ULC S636 approved PVC, CPVC or polypropylene pipe for venting.
- 2" pipe, vents up to 65 equivalent feet
- 3" pipe, vents up to 135 equivalent feet

SIDE-MOUNTED HOT AND COLD RECIRCULATING TAPS

- Allows Premier® to be installed as part of combination space heating/water heating applications

TOP FIRED ULTRA-LOW NOX GAS BURNER

- Enhanced Ultra-low NOx burner complies with SCAQMD Rule 1146.2 and other Air Quality Management Districts with similar requirements for NOx emissions of less than 14 ng/j

POWERED ANODE

BLUE DIAMOND® GLASS COATING

- Provides superior corrosion resistance compared to industry standard glass lining.

CSA CERTIFIED AND ASME RATED T&P RELIEF VALVE

MAXIMUM HYDROSTATIC WORKING PRESSURE: 150 PSI

CODE COMPLIANCE

- Meets IBC and ICC National Codes.
- Meets the thermal efficiency and standby loss requirements of the U.S. Department of Energy and current edition of ASHRAE/IES 90.1.

DESIGN-CERTIFIED BY UNDERWRITERS LABORATORIES

- Certified at 300 psi test pressure and 150 psi working pressure. Listed according to ANSI Z21.10.3 - CSA 4.3 standards governing storage tank-type water heaters.

8-YEAR LIMITED TANK AND PARTS

WARRANTY

- For complete information, consult written warranty or go to statewaterheaters.com

*Continuous hot water based on 4.31 GPM continuous flow with a 65°F inlet water temperature, 110°F outlet temperature, and a unit installed per the manufacturer's instructions.



MODEL SHOWN GP8-75
SERIES 400

ADAPTIVE GAS CONTROL

LOW LEAD CONTENT

GAS-FIRED LISTED

CLASSIFIED WATER QUALITY

AHRI CERTIFIED® www.ahridirectory.org

SOLID. STATE.

© February 2026 State Water Heaters. All Rights Reserved

Model Number	Nominal Capacity	Rated Storage Volume	First Hour Rating (Gallons)	UEF	Thermal Efficiency	Recovery @ 90° Rise Gallon Per Hour	BTU Input Per Hour	Vent Size	Dimensions in Inches		Approx. Shipping Weight (lbs)
									Height to Top of Heater	Diameter	
GP8 50 MTPDT	50	49	118	0.88	96%	129	100,000	2 or 3	66-3/4	22	256
GP8 75 MTPDT	75	74	150	0.86	96%	129	100,000	2 or 3	65-1/4	27-3/4	388

Models certified for sea level to 10,100 ft. elevation.
Optional Condensate Neutralizer Kit available (Part Number 100289339).

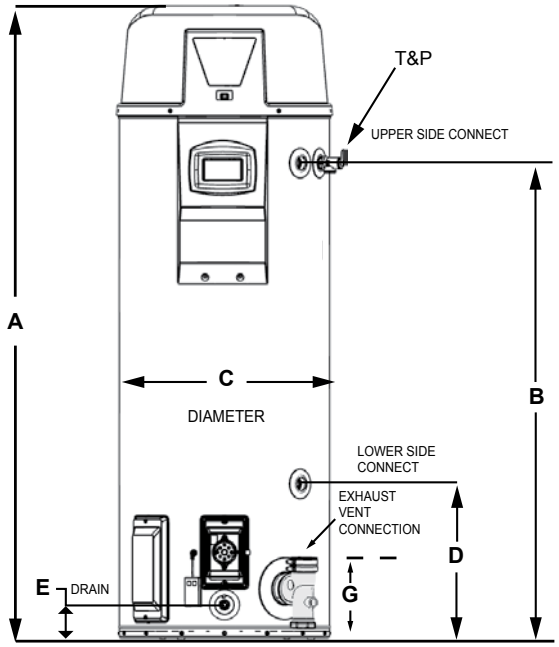

FRONT VIEW

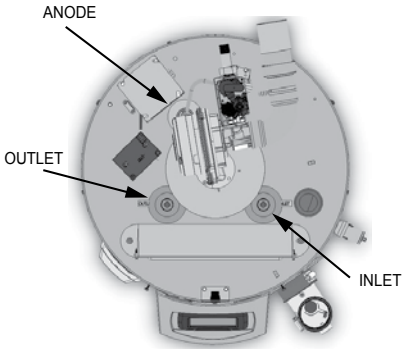

TOP VIEW

*INSTALL IN ACCORDANCE WITH LOCAL CODES

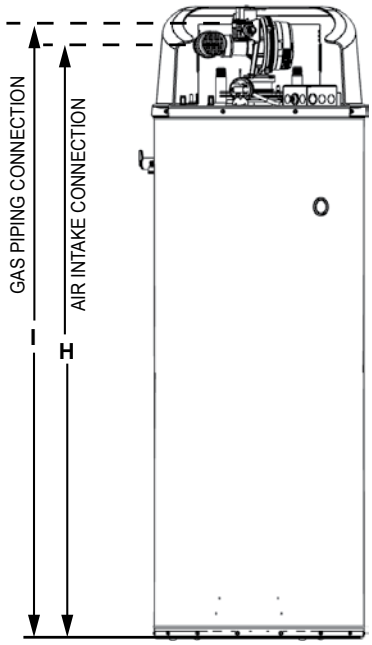

BACK VIEW

ROUGH-IN-DIMENSIONS

Models	Units	A	B	C	D	E	F	G	H	I
50G	Inches	66-3/4	49 1/4	22	15 3/4	3	8	8	62	65
	CM	169.5	125.09	55.88	40.00	7.62	20.32	20.32	157.48	165.1
75G	Inches	65 1/4	45 5/8	27 3/4	16	3 3/4	8	8	59	60
	CM	165.7	115.9	70.5	40.6	9.4	20.3	20.1	145.7	149.8

Top Inlet and Outlet: 50G - 3/4" NPT; 75G - 1" NPT
Side Inlet and Outlet: 3/4" NPT
Gas Inlet: 1/2" NPT
Condensate drain outlet: 1/2" NPT

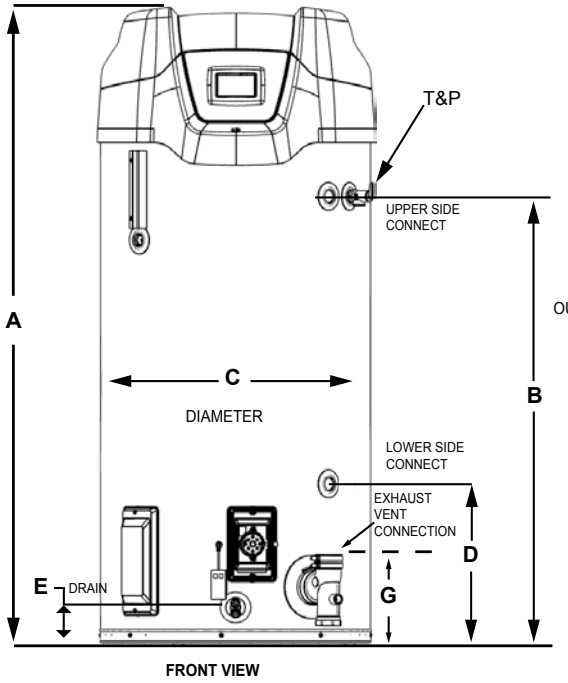

FRONT VIEW

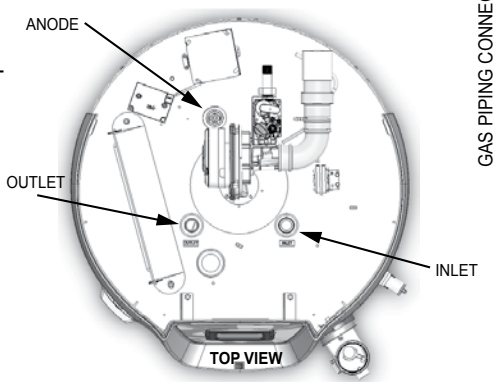

TOP VIEW

*INSTALL IN ACCORDANCE WITH LOCAL CODES

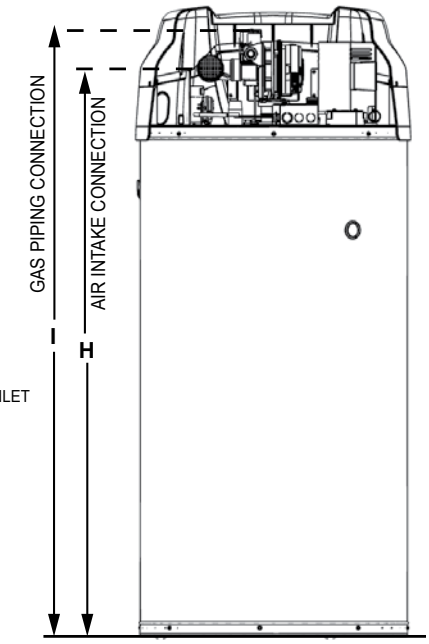

BACK VIEW

© February 2026 State Water Heaters. All Rights Reserved