THIS DOCUMENT IS TRUE AND CORRECT AT TIME OF PUBLICATION. CONTINUED PRODUCT IMPROVEMENTS MAKE SPECIFICATIONS AND MEASUREMENTS SUBJECT TO CHANGE WITHOUT NOTICE.

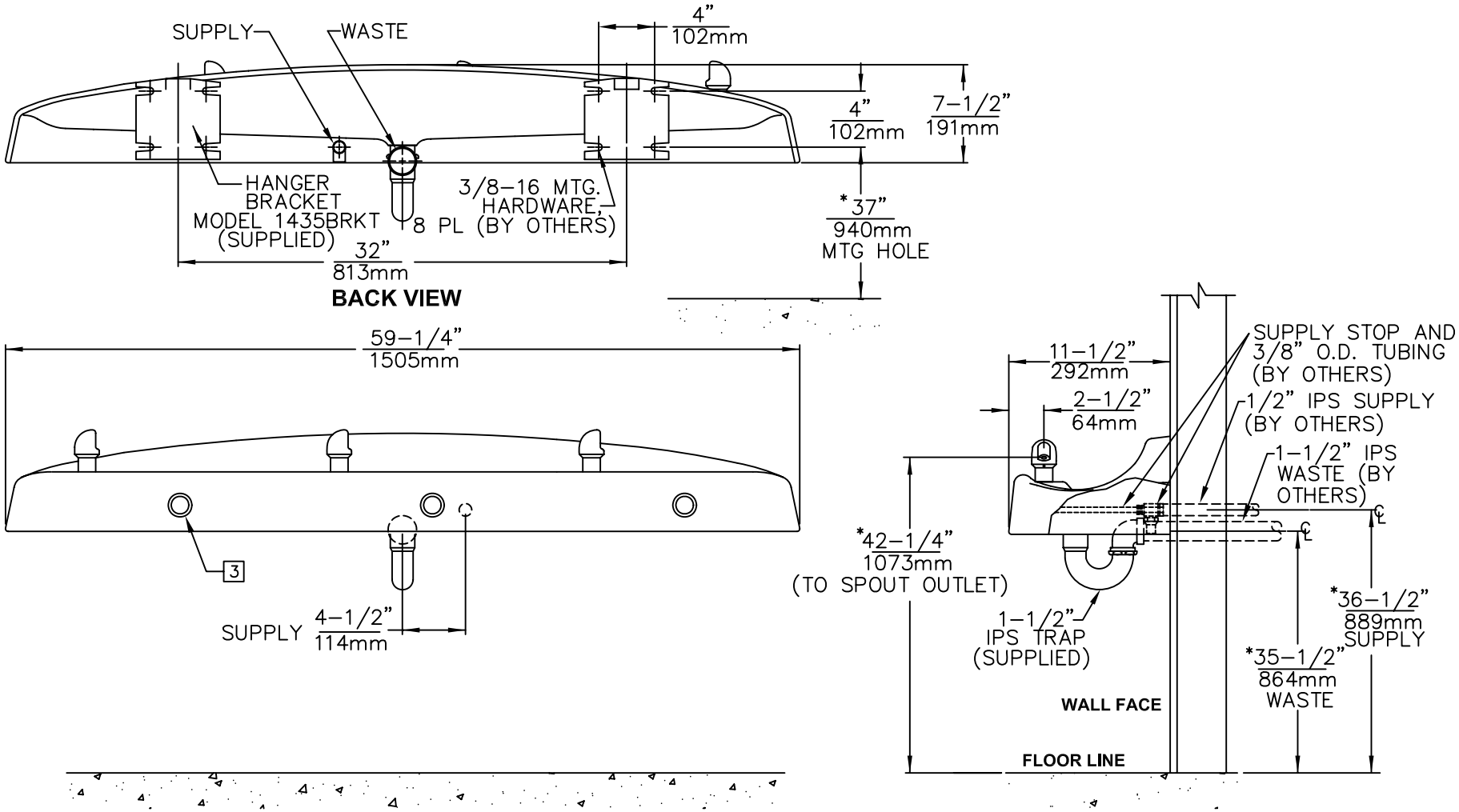

NOTES:

1. ROUGH-IN DIMENSIONS MAY VARY ±1/4" (6.4mm)
2. WHEN INSTALLING THIS UNIT LOCAL, STATE OR FEDERAL CODES SHOULD BE ADHERED TO. FOR INSTALLATION HEIGHTS OTHER THAN SHOWN, DIMENSIONS MARKED (*) MUST BE ADJUSTED ACCORDINGLY.

3. REFER TO 5874/VRK5874 OPERATION AND MAINTENANCE MANUAL FOR PUSH BUTTON AND VALVE INSTALLATION/MAINTENANCE INSTRUCTIONS.

Haws corporation
INFO FAX : 1-888-FAX-HAWS (1-888-329-4297)
1455 Kleppe Ln, Sparks NV, 89431
Phone: 775-359-4712 Fax: 775-359-7424
Haws Ag Bachweg 3 CH-3401 Burgdorf Switzerland
Haws Mfg Pte Ltd 74 Sungei Kadut Loop Singapore 729531
e-mail: Haws@hawsco.com website: www.hawsco.com

ECR NO.	REVISED PER	BY:	MODEL(S):	PART NUMBER:
.	ECN: 3876	JF	1435 THREE BUBBLER FOUNTAIN	0002076860.D
DRAWN: CJL	DATE: 11/91	CHK'D.:	INFO FAX DOC #: 21435	DRAWING NUMBER: 09922C00 REV. 10
APPROVED:	DATE:		SCALE: 1:11 DRAWING TYPE: INSTALLATION/FAXBACK	SIZE: A SHT. 1 OF 1

DWG. NO. 09922C00

©2006 Haws Corporation - All Rights Reserved HAWS® and other trademarks used in these materials are the exclusive property of Haws Corporation.