Panasonic



WhisperFresh® Family Fresh Air Supply Fans

WhisperFresh® VENTILATION FAN



FV-13NLFSC1 / FV-13NLFS1

Models
WhisperFresh®: FV-13NLFS1
WhisperFresh® Plus: FV-13NLFSC1
WhisperFresh® Select: FV-15NLFS1H



FV-15NLFS1H

Product Overview

The WhisperFresh® family offers builders, contractors, distributors, and homeowners a flexible lineup of mechanical fresh-air supply fans designed to support whole-house ventilation strategies. Choose the right model based on airflow need, controls, connectivity, filtration, and project requirements.

Key Features

- Mechanical fresh air supply ventilation designed to bring outdoor air into the home through a controlled, filtered path.
- DC/ECM motor technology supports efficient, continuous ventilation performance.
- SmartFlow™ technology helps maintain selected airflow as static pressure changes.
- Customizable airflow options support a range of whole-house ventilation design needs.
- Designed to help support ASHRAE 62.2, LEED, and California Title 24 applications when properly selected, installed, set to the required airflow, and operated.
- Filtered fresh air supply with flexible filtration options available across the family.
- 6-inch duct compatibility supports common fresh air supply installation practices.
- Installation flexibility supports new construction, multifamily, high-volume residential, and retrofit applications.

ENERGY STAR

Fresh Air Supply Solutions Designed for Flexibility, Connectivity, and Performance

The Panasonic WhisperFresh® family delivers a complete lineup of mechanical fresh air supply ventilation solutions designed to support healthy indoor environments and code-driven whole-house ventilation strategies. From builder-focused value applications to connected ventilation and higher-capacity fresh air delivery, there's a WhisperFresh® model designed to fit the needs of virtually any residential project.

Whether you're building new homes, upgrading ventilation systems, supporting multifamily applications, or designing high-performance homes, the WhisperFresh® family offers the airflow flexibility, filtration options, controls, and performance features needed to help bring fresh outdoor air into the home through a controlled, filtered pathway.

Choose the Right WhisperFresh® Model for Your Project

	WhisperFresh®	WhisperFresh® Plus	WhisperFresh® Select
Model Number	**FV-13NLFS1**	**FV-13NLFSC1**	**FV-15NLFS1H**
Application Focus	Essential Ventilation	Connected Ventilation	Higher-Capacity Ventilation
Airflow Range	20–130 CFM	20–130 CFM	50–150 CFM
Airflow Selection	Digital Controls	Digital Controls	Pick-A-Flow® (9 Settings)
SmartFlow™ Technology	✓	✓	✓
Fault Indicator Display (FID)	✓	✓	–
Humidity & Temperature Controls	–	✓	✓
Pressure Ports for Airflow Verification	–	–	✓
Plug 'n Play® Wi-Fi Capability	–	Optional	Optional
MERV 13 Filter	–	–	Included



FV-13NLFS1



Access Panel

WhisperFresh® VENTILATION FAN

Essential Fresh Air Supply Fan

Designed for production builders, multifamily projects, residential new construction, and code-driven ventilation applications, WhisperFresh® fans deliver reliable fresh air ventilation with Panasonic performance and airflow verification features that help simplify installation and maintenance.

Key Benefits

- Adjustable 20–130 CFM airflow with built-in digital controls
- SmartFlow™ technology helps maintain selected airflow as static pressure changes
- Built-in Fault Indicator Display (FID) provides airflow and maintenance alerts for improved service visibility
- Access panel and filter door help simplify filter checks and maintenance
- Accepts compatible 8" x 8" x 1" filters for flexible filtration options

Choose WhisperFresh® fans when the project requires reliable fresh air supply ventilation, SmartFlow™ performance, and the trusted quality builders and contractors expect from Panasonic.



FV-13NLFSC1



Access Panel



Filter Door

WhisperFresh® Plus VENTILATION FAN

Connected Fresh Air Supply Fan

WhisperFresh® Plus fans build on the value of the WhisperFresh® model by adding environmental sensing and optional connected-home capabilities. Designed for climates where outdoor conditions matter, it helps support smarter ventilation decisions based on humidity and temperature.

Key Benefits

- Adjustable 20–130 CFM airflow with built-in digital controls.
- Built-in digital controls allow CFM, humidity, and temperature level adjustment.
- Humidity and temperature sensing help support smarter fresh air supply operation.
- Built-in Plug 'n Play® port supports optional Wi-Fi connectivity using the optional Wi-Fi sensor/module, sold separately.
- Built-in Fault Indicator Display (FID) provides airflow and maintenance alerts for improved service visibility.
- Accepts compatible 8" x 8" x 1" filters for flexible filtration options

Choose WhisperFresh® Plus models when the application benefits from integrated humidity and temperature sensing, enhanced diagnostics, and optional connected ventilation capabilities.



Best Fit Applications

- Hot and humid climates
- Smart home projects
- Enhanced indoor air quality strategies
- Homes requiring environmental sensing
- Connected ventilation applications



FV-15NLFS1H

WhisperFresh® Select VENTILATION FAN

Higher-CFM Fresh Air Supply Fan with Premium Features

WhisperFresh® Select models are designed for projects requiring higher airflow capacity, premium controls, included filtration, and airflow verification capabilities. With Pick-A-Flow® airflow selection, integrated climate controls, and included MERV 13 filtration, it offers an advanced fresh air supply solution for higher-performance residential applications.

Key Benefits

- Pick-A-Flow® airflow selection from 50–150 CFM across 9 settings.
- SmartFlow™ technology supports precision whole-house supply ventilation.
- Adjustable high-humidity and low-temperature dials support climate-based operation.
- Built-in Plug 'n Play® port supports optional Wi-Fi connectivity using the optional Wi-Fi sensor/module, sold separately.
- MERV 13 filter included; MERV 8 and MERV 13 replacement filters available.
- Pressure ports support airflow verification.

Choose WhisperFresh® Select models when the project requires higher airflow capacity, included MERV 13 filtration, airflow verification capabilities, and premium ventilation controls.



Best Fit Applications

- Higher airflow ventilation requirements
- Larger homes
- Premium residential construction
- Builder performance packages
- Projects requiring airflow verification
- Applications prioritizing enhanced filtration

Features and Controls



CFM

(FV-13NLFS1 / FV-13NLFSC1)

20–130 CFM adjustable airflow for WhisperFresh® and WhisperFresh® Plus models.



CFM

(FV-15NLFS1H)

50-150 CFM adjustable airflow for WhisperFresh® Select models.

Humidity Setting

Customized fresh air supply based on humidity conditions of incoming air. Fan will automatically shut off (or not turn on) when the outside relative humidity is higher than the setting on the humidity dial (from 30% to 80% RH). Not for base model.

Temperature Setting

Customized low temperature setting will shut fan off when incoming supply air is too cold. Fan will turn off (or not turn on) when the outside temperature is lower than the setting value. (From 15°F to 40°F). Fan automatically stops operating when the incoming air is higher than 95°F. Not for base model.

Reset Button

Convenient light indicator and unobtrusive alarm signal on the access panel help inform the homeowner when it's time to check and clean the (MERV 8/MERV 13) filter. Button resets every time customer changes filter.



Wi-Fi Control Module WP100PBA

(Sold Separately)

Enables optional wireless monitoring and control capabilities through Panasonic's connected ventilation platform. Compatible with WhisperFresh® Plus and WhisperFresh® Select models.

Engineered Performance Across the Entire WhisperFresh® Family

WhisperFresh® and WhisperFresh® Plus

	FV-13NLFS1 / FV-13NLFSC1																																			
Specifications	**HVI Certified Data**																																			
Static Pressure in inches w.g.	0.2												0.3												0.4											
Air Volume (CFM)	130	120	110	100	90	80	70	60	50	40	30	20	130	120	110	100	90	80	70	60	50	40	30	20	107	109	110	99	90	80	70	60	50	40	30	20
Power Consumption (watts)	17.9	15.3	13.2	11.2	9.7	8.8	7.4	6.6	5.9	5.2	4.7	4.4	20.9	18.1	16.1	14.2	12.2	11.0	9.7	8.9	7.9	7.0	6.5	5.9	18.8	18.7	18.9	16.8	15.0	13.7	12.2	11.1	9.9	9.2	8.5	7.6
Energy Efficiency (CFM/Watt)	7.2	7.8	8.3	8.9	9.2	9.0	9.4	9.0	8.4	7.6	6.3	4.5	6.2	6.6	6.8	7.0	7.3	7.2	7.2	6.7	6.3	5.7	4.6	3.3	5.6	5.8	5.8	5.8	6.0	5.8	5.7	5.4	5.0	4.3	3.5	2.6
Current (amps)	0.29	0.26	0.22	0.19	0.17	0.15	0.13	0.12	0.11	0.10	0.09	0.08	0.34	0.29	0.26	0.23	0.21	0.19	0.17	0.15	0.14	0.13	0.12	0.11	0.31	0.30	0.31	0.27	0.25	0.23	0.21	0.19	0.17	0.16	0.15	0.13
MAX. Current(amps)	0.29												0.34												0.31											
Power Rating (V/Hz)	120/60												120/60												120/60											
ENERGY STAR® certified	Yes												–												–											

WhisperFresh® and WhisperFresh® Plus (with MERV 13 Filter)

	FV-13NLFS1 / FV-13NLFSC1																																			
Specifications	**Not HVI Certified—For Reference Only**																																			
Static Pressure in inches w.g.	0.2												0.3												0.4											
Air Volume (CFM)	130	120	110	100	90	80	70	60	50	40	30	20	111	108	110	100	90	80	70	60	50	40	30	20	84	81	83	82	82	80	70	60	50	40	30	20
Power Consumption (watts)	21.3	19.2	15.7	13.9	11.8	10.5	8.7	7.9	6.7	5.9	5.2	4.7	18.7	18.7	18.8	16.9	14.8	13.0	11.3	10.0	8.7	7.8	7.0	6.3	15.7	15.6	15.6	15.6	15.5	15.4	13.8	12.2	10.9	9.9	9.1	8.3
Energy Efficiency (CFM/Watt)	6.1	6.2	7.0	7.1	7.6	7.6	8.0	7.5	7.4	6.7	5.7	4.2	5.9	5.7	5.8	5.9	6.0	6.1	6.1	6.0	5.7	5.1	4.2	3.1	5.3	5.1	5.3	5.2	5.2	5.1	5.0	4.9	4.5	4.0	3.2	2.4
Current (amps)	0.34	0.31	0.26	0.23	0.20	0.17	0.15	0.14	0.12	0.11	0.09	0.09	0.30	0.30	0.30	0.27	0.24	0.22	0.19	0.17	0.15	0.14	0.12	0.11	0.26	0.26	0.26	0.28	0.25	0.25	0.23	0.20	0.18	0.17	0.16	0.14
MAX. Current(amps)	0.34												0.30												0.28											
Power Rating (V/Hz)	120/60												120/60												120/60											
ENERGY STAR® certified	–												–												–											

WhisperFresh® Select (with MERV 13 Filter)

	FV-15NLFS1H																																			
Specifications	**Not HVI Certified—For Reference Only**																																			
Static Pressure in inches w.g.	0.2											0.3												0.4												
Air Volume (CFM)	150	140	130	120	110	100	90	80	70	60	50	150	140	129	118	110	100	88	80	69	60	50	130	130	130	116	109	100	90	80	70	60	50			
Power Consumption (watts)	27.3	24.8	22.6	19.4	16.7	15.3	13.5	12.4	10.0	9.3	8.2	32.0	29.0	25.0	23.0	20.0	18.0	15.0	14.0	13.0	11.0	10.0	–	–	–	–	–	21.0	19.0	17.0	15.0	14.0	12.0			
Energy Efficiency (CFM/Watt)	5.49	5.65	5.75	6.19	6.59	6.54	6.67	6.45	7.00	6.45	6.10	–	–	–	–	–	–	–	–	–	–	–	–	–	–	–	–	–	–	–	–	–	–			
Current (amps)	0.41	0.26	0.33	0.29	0.25	0.23	0.20	0.18	0.16	0.15	0.13	0.46	0.42	0.38	0.34	0.31	0.28	0.25	0.22	0.21	0.18	0.16	–	–	–	–	–	0.32	0.29	0.26	0.24	0.22	0.21			
MAX. Current(amps)	0.46											0.46												0.46												
Power Rating (V/Hz)	120/60											120/60												120/60												
ENERGY STAR® certified	Yes											–												–												

ECM Motor with SmartFlow™ Technology

The WhisperFresh® ventilation fans are designed to perform as rated. When the fan senses static pressure, its speed is automatically increased to ensure optimal CFM output. This feature provides peace of mind, as the installer doesn't have to worry about compromising the fan's performance, even with a complicated duct run.

WhisperFresh® and WhisperFresh® Plus

FV-13NLFS1 / FV-13NLFSC1

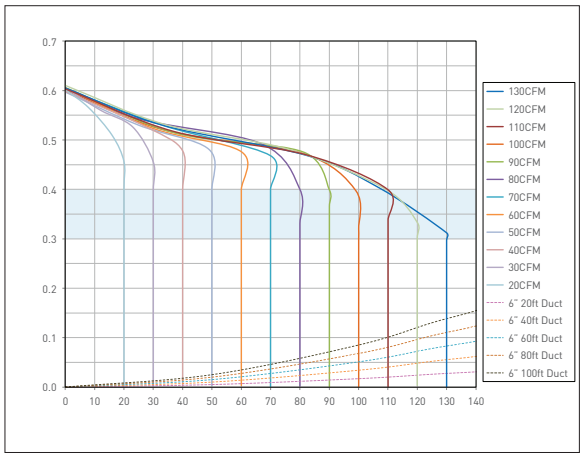

FV-13NLFS1 / FV-13NLFSC1

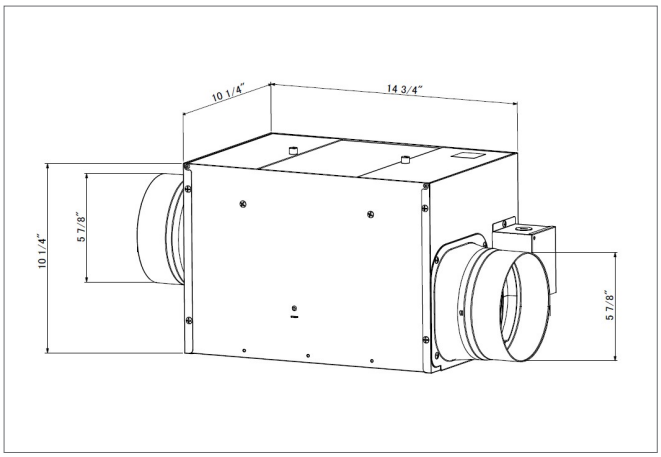

Dimensions

WhisperFresh® Select

FV-15NLFS1H

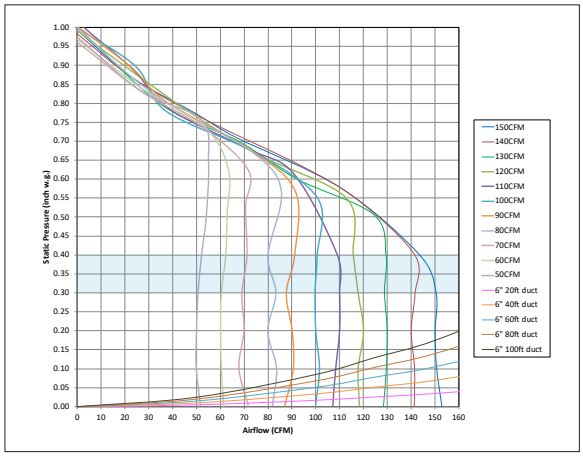

HVI-Certified performance with MERV 13 filter installed

FV-15NLFS1H

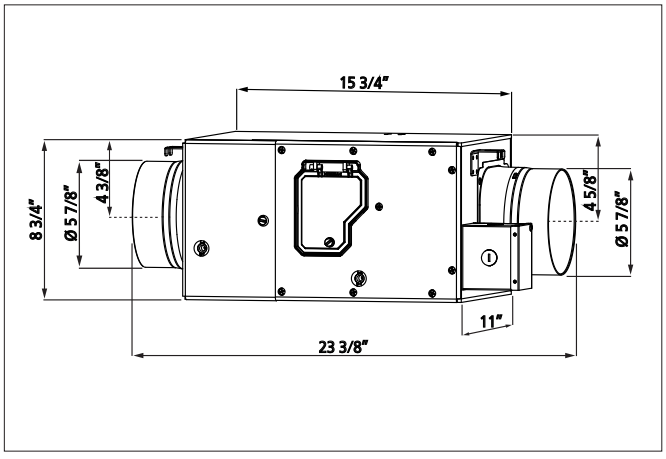

Dimensions

Panasonic
IAQ Division
Two Riverfront Plaza
Newark, NJ 07102
iaq.na.panasonic.com

For Order Information
PHONE: 866-292-7299
FAX: 888-553-0723
ventfans@us.panasonic.com

Design and specifications subject to change without notice.