NOTES:

1. TO INSPECT ASSEBMLY, FOLLOW FIRST ARTICLE AND IN PROCESS INSPECTION SHEET.

BILL OF MATERIAL (CURRENT LEVEL)

ITEM	PT/ASSY	DESCRIPTION	TYPE	QTY.
1	11XXD	SOLID MOUNTING BRACKET	PART	2
2	1-206	HARDWARE PACK	ASSEMBLY	2
3	1100C	TOWEL SHELF ROSETTE	PART	2
4	1134P	POST	PART	2
5	92308	SCRW, M5 X 5 SKT HD CUP PT W/ SELF LOC SS	PART	2
6	80390	SHELF WASHER	PART	4
7	1135-18TSCL	18" GLASS SHELF	PART	1
8	34N	CAP NUT	PART	2
9	34S	FINISHING SCREW	PART	2
10	10888	HEX KEY, 2.5MM ALLOY STEEL	PART	1
11	7-753	18" GALLERY RAIL	ASSEMBLY	1

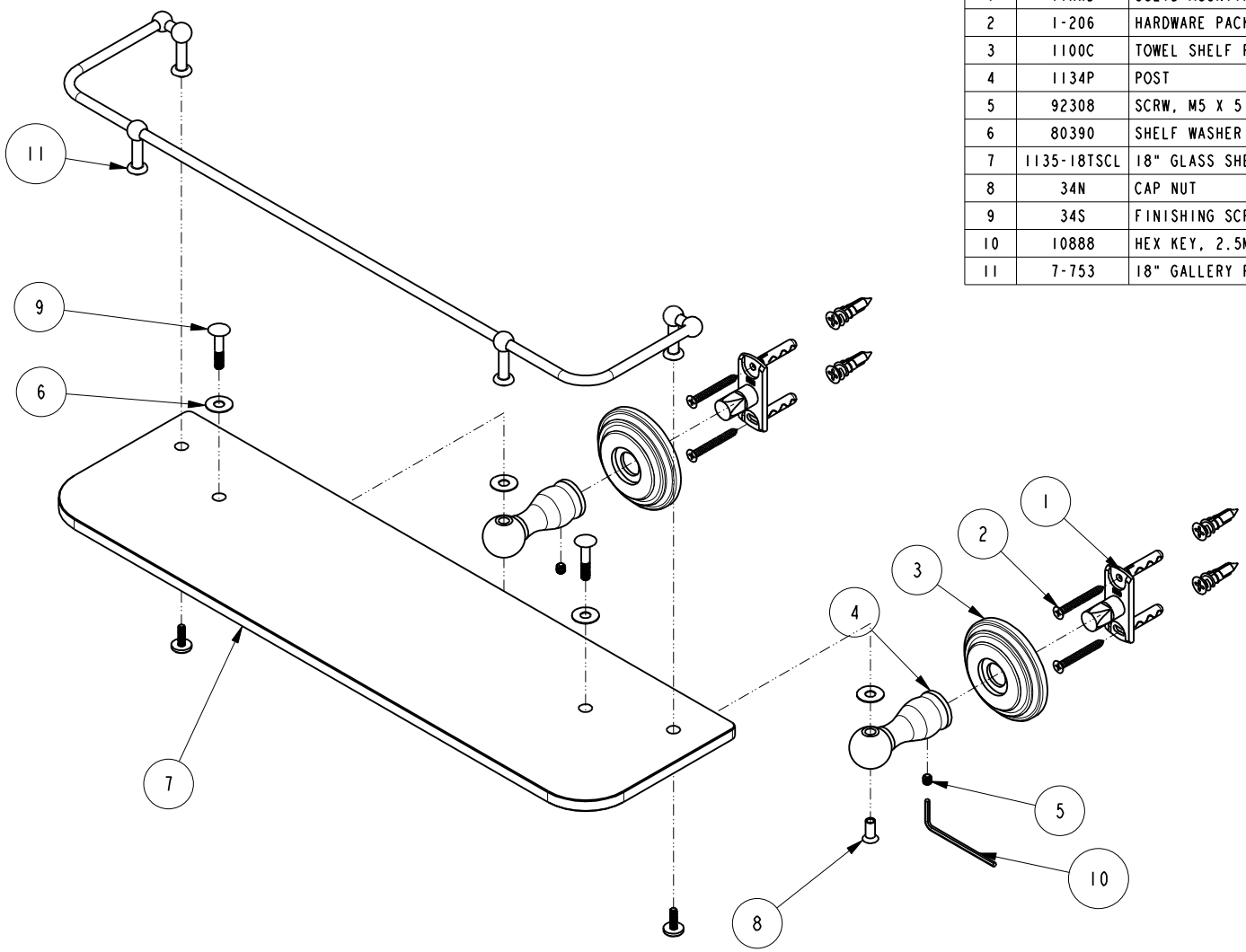

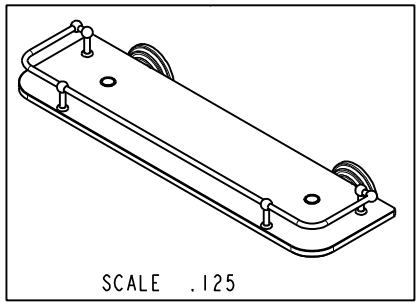

ZONE	REV	DESCRIPTION	DATE	APPROVED
-	A	EN-4378	07/27/21	R.S.
-	-	RELEASED	01/22/98	-

COPYRIGHT 2005 BRASSTECH, INC. THESE DRAWINGS AND THE DESIGNS DEPICTED HEREIN ARE THE PROPRIETARY PROPERTY OF BRASSTECH. ANY USE OR REPRODUCTION IS SUBJECT TO THE EXPRESS APPROVAL OF BRASSTECH. UNAUTHORIZED USE IS STRICTLY PROHIBITED. ALL RIGHTS RESERVED.

TESTING	-	-	-
ASSEMBLY	-	-	-
PLATING	-	-	-
POLISHING	-	NEXT ASSY	USED ON
MACHINING	-	APPLICATION	
TOOLING FIXTURE #		REMOVE ALL BURRS AND SHARP EDGES	

UNITS ARE: INCHES [MM]
TOLERANCES ARE:
FRACTIONS ±1/16" DECIMALS .X ±.1 [2.5] .XX ±.06 [1.5] ANGLES ±1°
(X.XXX) DENOTES CRITICAL DIMS.
ALL THREADS ARE CRITICAL

DRAWN	JINSON	07/27/21
CHECKED	R.S.	07/27/21
APPROVED	R.S.	07/27/21

BRASSTECH INCORPORATED
2001 CARNEGIE AVE.
SANTA ANA, CA 92705
(949) 417-5207

18" TEMPERED GLASS SHELF

DWG NO. 1135T-18 REV A

SCALE .250 REF. - SHEET 1 OF 2

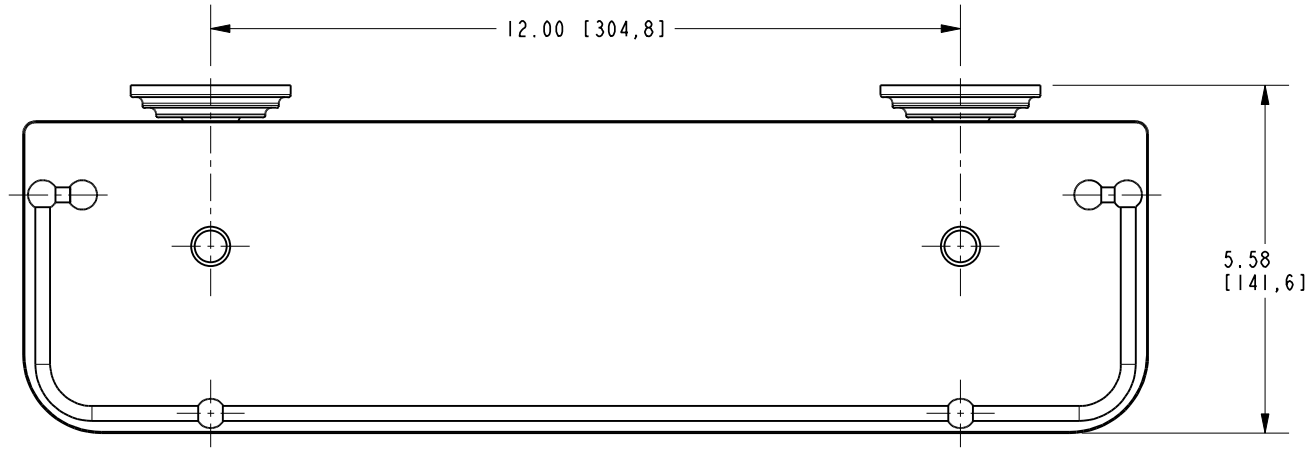

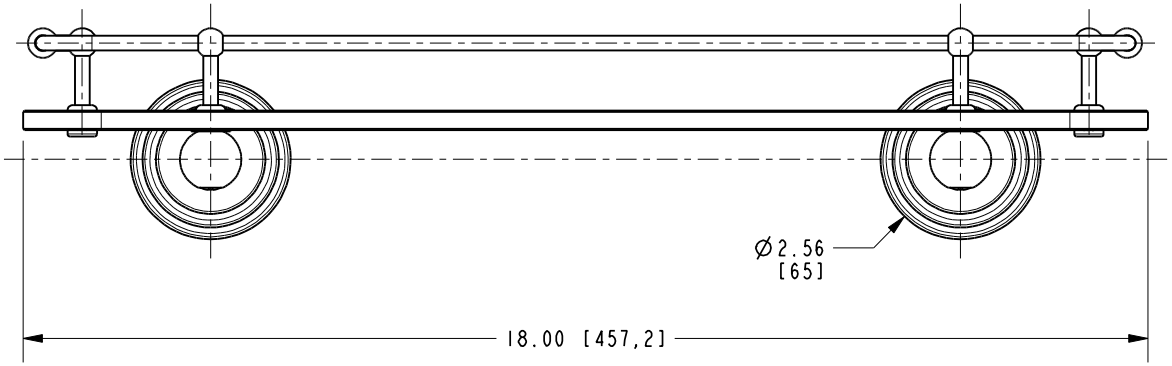

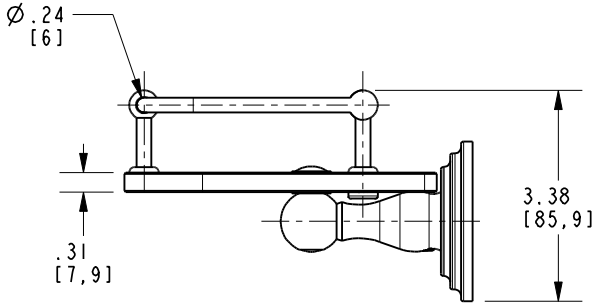

BRASSTECH INCORPORATED

2001 E. CARNEGIE AVE.
SANTA ANA, CA 92705
(949) 417-5207

DWG NO.	REV
1135T-18	A

SCALE	REF.	SHEET
.325	-	2 OF 2