NOTES:

N1 1. FIT / FORM / FUNCTION SHALL FOLLOW PS-E.008.

2 APPLY ADHESIVE LOCTITE 680 OR EQUIVALENT.

3 TORQUE TO 4-6 LB-IN.

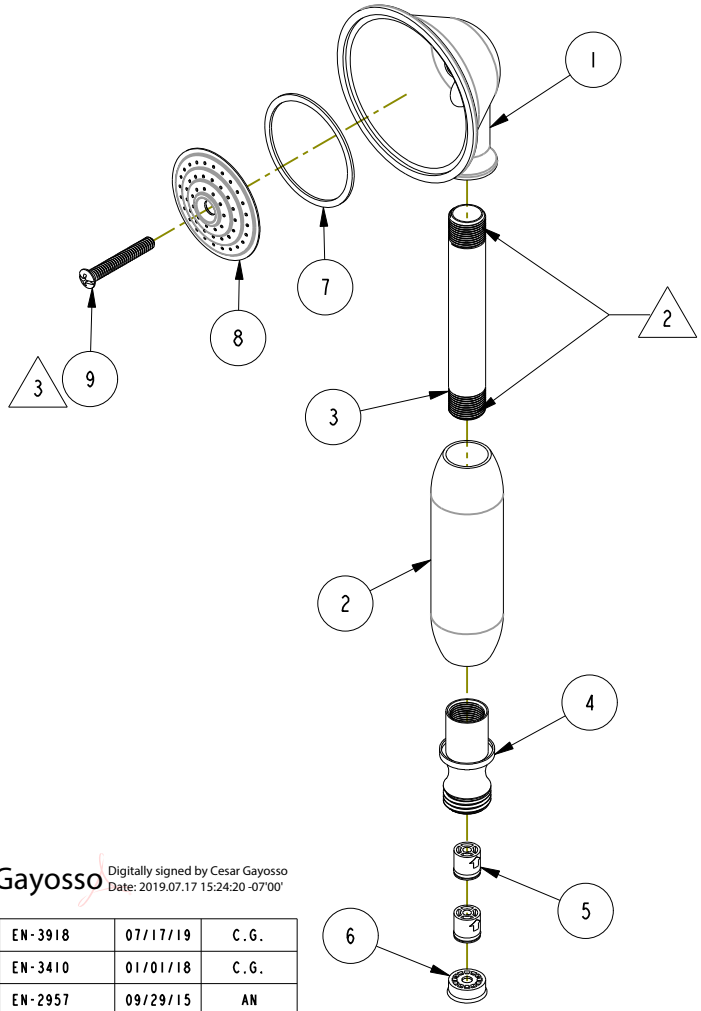

BILL OF MATERIAL (CURRENT LEVEL)

ITEM	PT/ASSY	DESCRIPTION	TYPE	QTY.
1	50991	BODY FOR HAND SHOWER	PART	1
2	50281	HANDLE, SMOOTH, HAND SHOWER	PART	1
3	50918	NIPPLE	PART	1
4	50917	ADAPTER FOR HOSE	PART	1
5	5-050	CHECK VALVE, NEOPERL DW10, WHITE	PART	2
6	12832	FLOW REGULATOR, 1.8 GPM MAX	PART	1
7	91173	WSHR, 1.64 ID X 1.84 OD X .042 THK, FLT, RUBBER	PART	1
8	50276	FACEPLATE (HND SHWR)	PART	1
9	92068	SCRW, 10-24 X 1-3/8 PHIL OVAL HD BRASS	PART	1

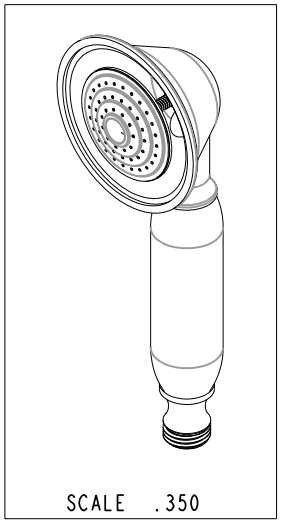

Cesar Gayosso Digitally signed by Cesar Gayosso Date: 2019.07.17 15:24:20 -07'00'

ZONE	REV	DESCRIPTION	DATE	APPROVED
-	H	EN-3918	07/17/19	C.G.
-	G	EN-3410	01/01/18	C.G.
-	F	EN-2957	09/29/15	AN
-	E	EN-2834b	09/16/15	AN
-	D	EN-2834	11/19/14	AN
-	C	EN-1668	07/07/11	-
-	B	EO-0695	08/11/06	-
-	A	EO-0073	02/17/03	-

COPYRIGHT 2005 BRASSTECH, INC. THESE DRAWINGS AND THE DESIGNS DEPICTED HEREIN ARE THE PROPRIETARY PROPERTY OF BRASSTECH. ANY USE OR REPRODUCTION IS SUBJECT TO THE EXPRESS APPROVAL OF BRASSTECH. UNAUTHORIZED USE IS STRICTLY PROHIBITED. ALL RIGHTS RESERVED.

TESTING	-	-	-
ASSEMBLY	-	-	-
PLATING	-	-	-
POLISHING	-	NEXT ASSY	USED ON
MACHINING	-	APPLICATION	
TOOLING FIXTURE #		REMOVE ALL BURRS AND SHARP EDGES	

UNITS ARE: INCHES [MM]
TOLERANCES ARE:
FRACTIONS ±1/16" DECIMALS .X ±.1 [2,5] .XX ±.06 [1,5] ANGLES ±1°
(X.XXX) DENOTES CRITICAL DIMS.
ALL THREADS ARE CRITICAL

DRAWN	JINSON	01/01/18
CHECKED	C.G.	01/01/18
APPROVED	C.G.	01/01/18

BRASSTECH INCORPORATED
2001 CARNEGIE AVE.
SANTA ANA, CA 92705
(949) 417-5207

HANDSHOWER ASM

DWG NO. 281 REV H

SCALE .350 REF. - SHEET 1 OF 2

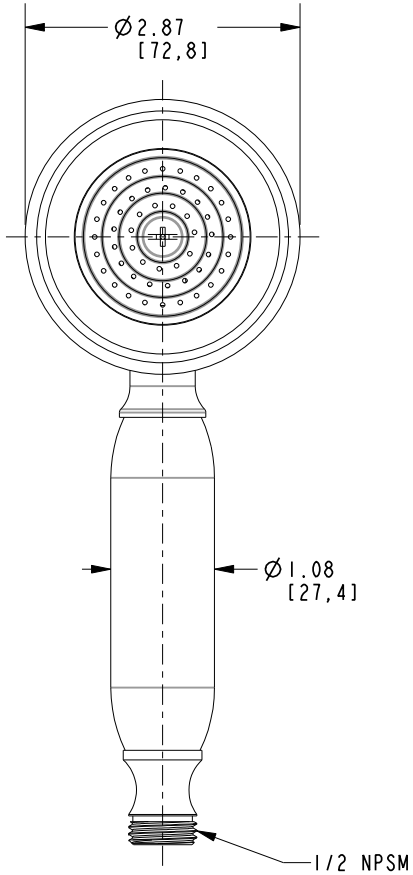

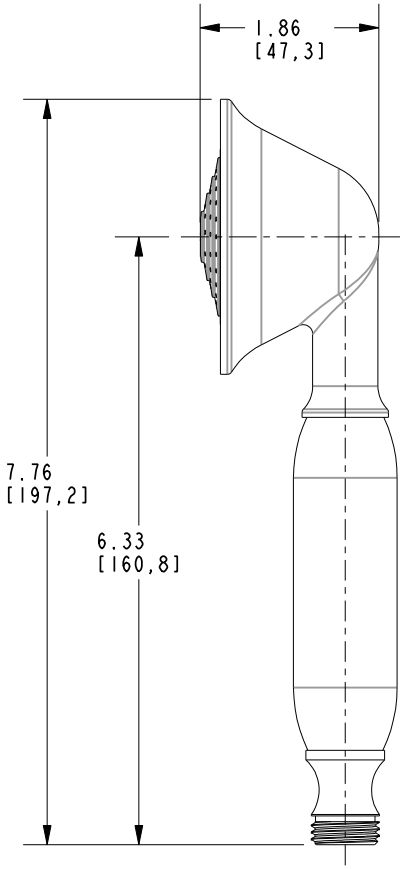

BRASSTECH INCORPORATED
2001 E. CARNEGIE AVE.
SANTA ANA, CA 92705
(949) 417-5207

DWG NO.	REV
281	H

SCALE	REF.	SHEET
.500	-	2 OF 2