NOTES:

(N1) 1. FIT / FORM / FUNCTION SHALL FOLLOW PS-E.008.

2. REMOVE O-RING FROM ADAPTER BEFORE PLATING. RE-ASSEMBLE THE O-RING AFTER PLATING.

3. DO NOT PLATE THIS PART.

4. DO NOT PLATE THIS AREA.

5. REMOVE O-RING FROM FACE PLATE BEFORE PLATING. RE-ASSEMBLE THE O-RING AFTER PLATING.

6. ⟷ INDICATES STROKE DIRECTION FOR SATIN FINISHES ONLY.

7. APPLY THIN COAT OF SILICON GREASE FOR O-RING BEFORE INSTALLATION.

8. APPLY LOCTITE 680.

9. HAND TIGHT.

BILL OF MATERIAL (CURRENT LEVEL)

ITEM	PT/ASSY	DESCRIPTION	TYPE	QTY.
1	209A	SHOWER HEAD 6" DIA.	ASSEMBLY	1
2	12833	FLOW REGULATOR, 1.8 GPM MAX	PART	1
3	91606	GASKET W/ FILTER SCREEN	PART	1

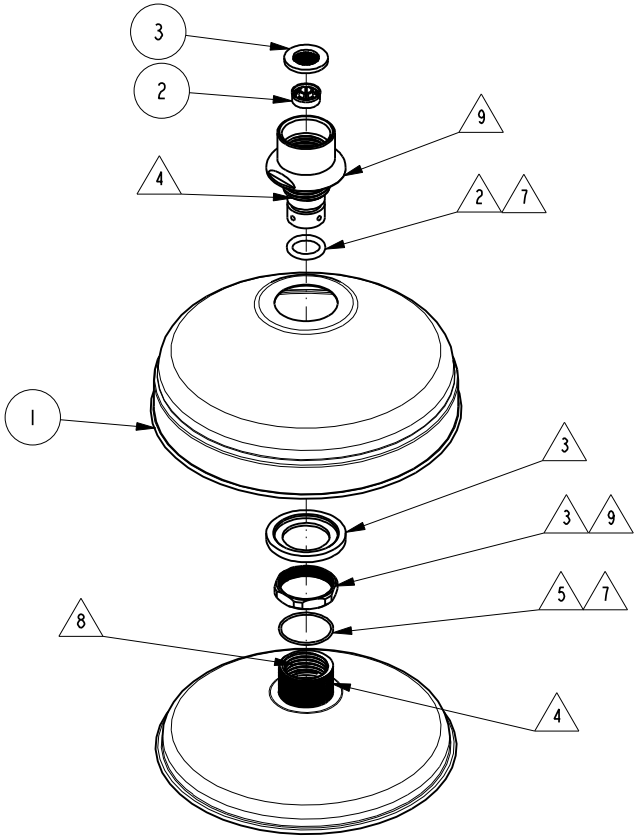

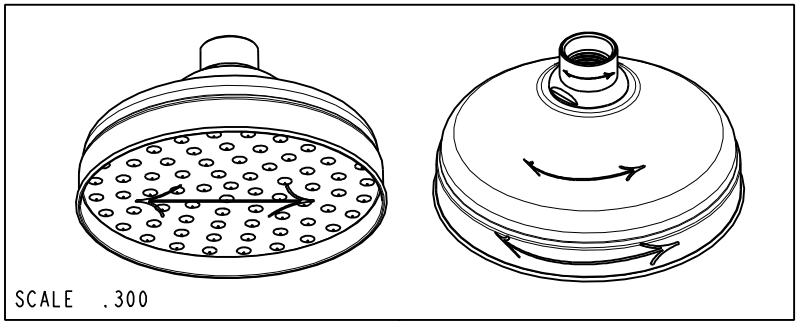

Cesar Gayosso Digitally signed by Cesar Gayosso
Date: 2019.11.11 13:36:04 -08'00'

ZONE	REV	DESCRIPTION	DATE	APPROVED
-	G	EN-3999	10/17/19	C.G.
-	F	EN-3552	03/20/18	-
-	E	EN-3410	01/08/18	-
-	D	EN-2153	7/19/12	-
-	C	EN-1668	04/05/11	-
-	B	EN-1695	01/31/11	-
-	A	EN-1551	05/06/10	-
-	-	EO-0860	09/06/07	-

COPYRIGHT 2005 BRASSTECH, INC. THESE DRAWINGS AND THE DESIGNS DEPICTED HEREIN ARE THE PROPRIETARY PROPERTY OF BRASSTECH. ANY USE OR REPRODUCTION IS SUBJECT TO THE EXPRESS APPROVAL OF BRASSTECH. UNAUTHORIZED USE IS STRICTLY PROHIBITED. ALL RIGHTS RESERVED.

TESTING	-	-	-
ASSEMBLY	-	-	-
PLATING	-	-	-
POLISHING	-	NEXT ASSY	USED ON
MACHINING	-	APPLICATION	
TOOLING FIXTURE #		REMOVE ALL BURRS AND SHARP EDGES	

UNITS ARE: INCHES [MM]
TOLERANCES ARE:
FRACTIONS DECIMALS ANGLES
±1/16" .X ±.1 [2,5] ±1°
.XX ±.06 [1,5]
(X.XXX) DENOTES CRITICAL DIMS.
ALL THREADS ARE CRITICAL

DRAWN	JINSON	10/17/19
CHECKED	C.G.	10/17/19
APPROVED	C.G.	10/17/19

BRASSTECH INCORPORATED
2001 CARNEGIE AVE.
SANTA ANA, CA 92705
(949) 417-5207

SHOWER HEAD 6" DIA.

DWG NO. 209 REV G

SCALE .300 REF. - SHEET 1 OF 2

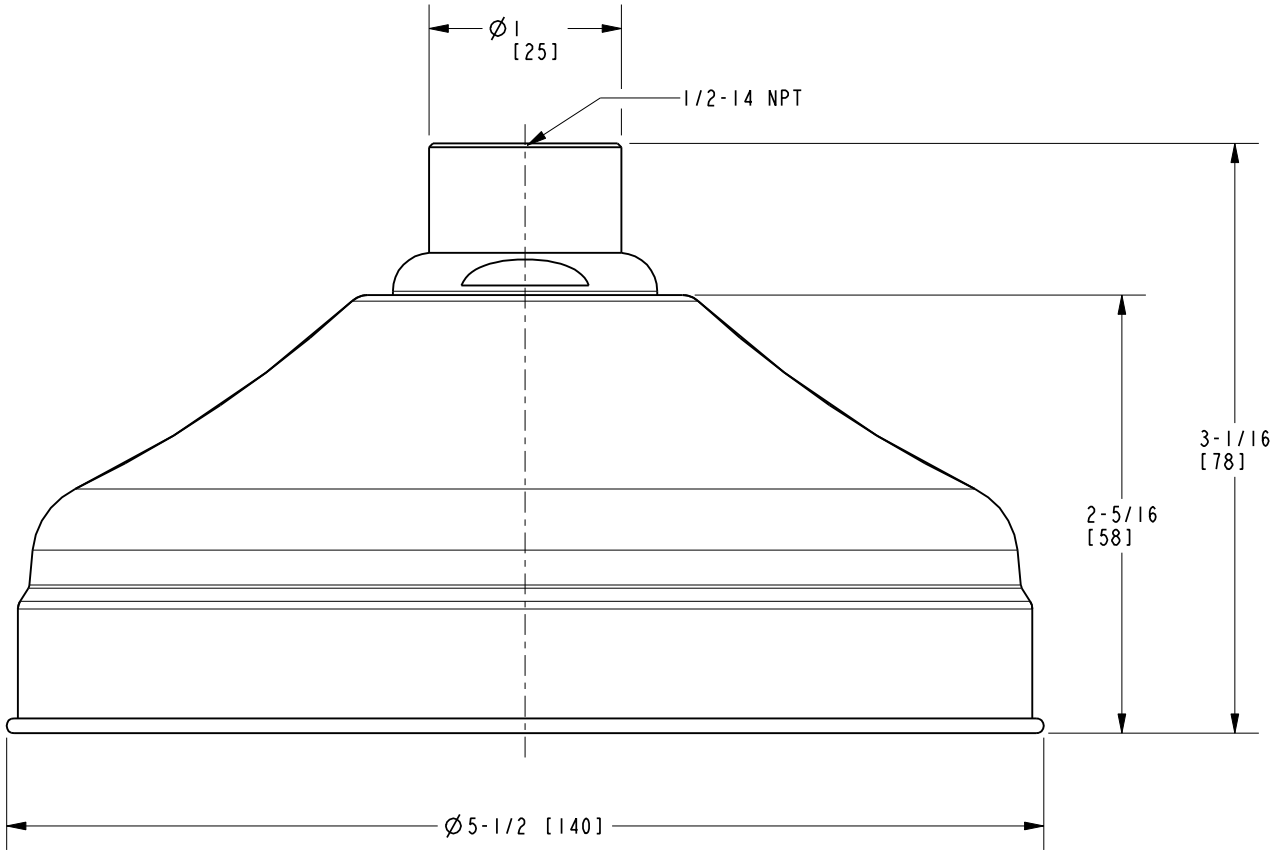

BRASSTECH INCORPORATED
2001 E. CARNEGIE AVE.
SANTA ANA, CA 92705
(949) 417-5207

DWG NO.	REV
209	G

SCALE	REF.	SHEET
1.000	-	2 OF 2