KOHLER®

Roughing-In

K-3023
KATHRYN™
MARBLE CONSOLE TABLE

Product Information

Included Component:		
Kathryn™ console table	K-3023	shown
Required Accessories:		
Kathryn™ 24″ (61 cm) frame kit	K-9699	shown
Caxton™ 17″ (43.2 cm) x 14″ (35.6 cm) undercounter lavatory	K-2210-G	not shown
Kathryn™ octagonal brass legs	K-6839*	shown
Kathryn™ octagonal fireclay/brass legs	K-2317*	not shown
Kathryn™ square fireclay legs	K-2318*	not shown
* Only one set of legs is required.		

Installation Notes
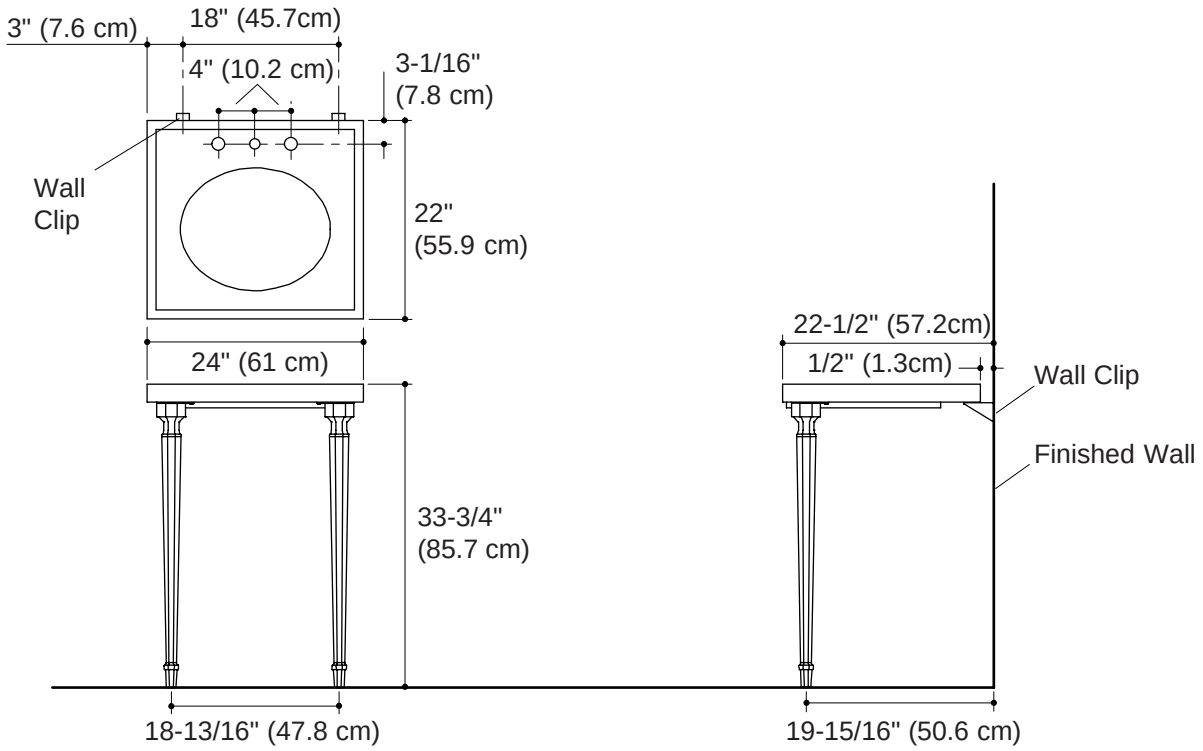
Install this product according to the installation guide.