SuperStor Ultra Stainless Steel Storage Tank

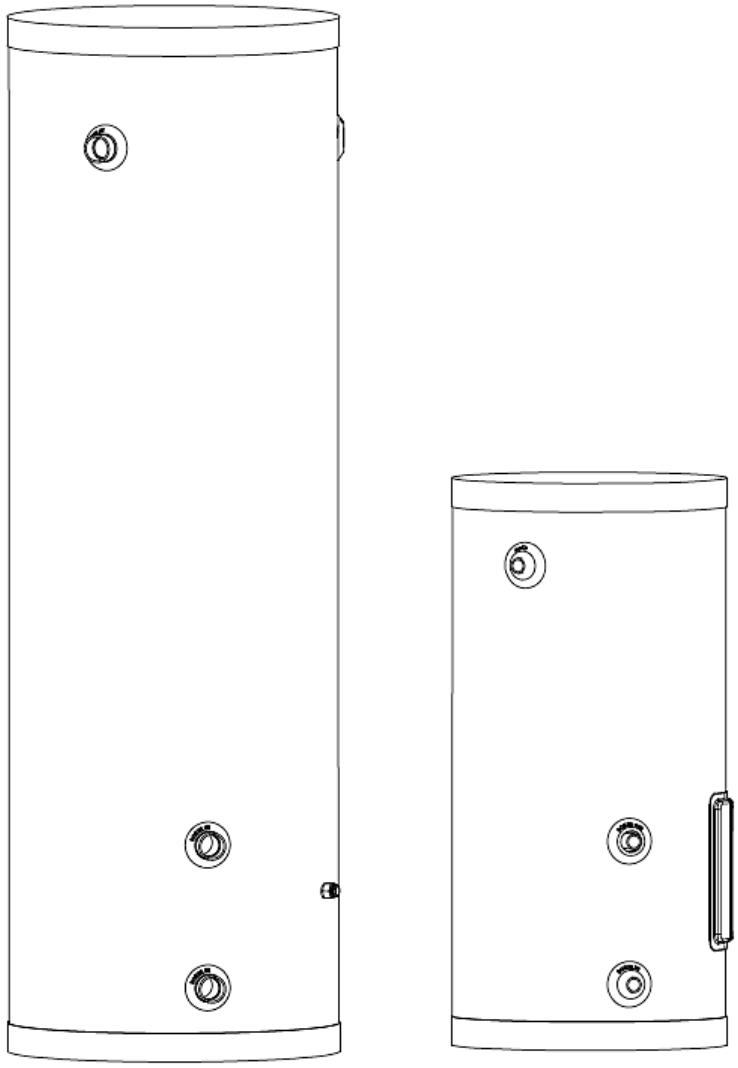

INSTALLATION

START-UP

MAINTENANCE

PARTS

Storage Tank Models

SSU-30CB / SSU-45CB
SSU-60CB / SSU-80CB / SSU-119CB

For Residential and Commercial Use

⚠ WARNING

This manual must only be used by a qualified heating installer/service technician. Read all instructions in this manual before installing. Perform steps in the order given. Failure to comply could result in substantial property damage, severe personal injury, or death.

NOTICE: *HTP reserves the right to make product changes or updates without notice and will not be held liable for typographical errors in literature.*

NOTE TO CONSUMER: PLEASE KEEP ALL INSTRUCTIONS FOR FUTURE REFERENCE.

120 Braley Rd. P.O. Box 429 East Freetown, MA 02717-0429 www.htproducts.com
LP-32 Rev. 6.7.13

SPECIAL ATTENTION BOXES

The following defined terms are used throughout this manual to bring attention to the presence of hazards of various risk levels, or to important product information.

⚠ DANGER

DANGER indicates an imminently hazardous situation which, if not avoided, will result in death or serious injury.

⚠ WARNING

WARNING indicates a potentially hazardous situation which, if not avoided, could result in death or serious injury.

⚠ CAUTION

CAUTION indicates a potentially hazardous situation which, if not avoided, may result in minor or moderate injury.

CAUTION

CAUTION used without the safety alert symbol indicates a potentially hazardous situation which, if not avoided, may result in property damage.

FOREWORD

This manual is intended to be used in conjunction with other literature provided with the SuperStor Ultra Stainless Steel Storage Tank. This includes all related control information. It is important that this manual, all other documents included with this system, and additional publications including the *Code for the Installation of Heat Producing Appliances* (latest version), be reviewed in their entirety before beginning any work.

Installation should be made in accordance with the regulations of the local code authorities and utility companies which pertain to this type of domestic hot water storage equipment.

FOR THE INSTALLER

⚠ WARNING

This manual must only be used by a qualified heating installer/service technician. Read all instructions in this manual before installing. Perform steps in the order given. Failure to comply could result in substantial property damage, severe personal injury, or death.

This storage tank must be installed by qualified and licensed personnel. The installer should be guided by the instructions furnished with the storage tank, and with local codes and utility company requirements.

INSTALLATIONS MUST COMPLY WITH:
Local, state, provincial, and national codes, laws, regulations and ordinances.

TABLE OF CONTENTS

PART 1 – GENERAL SAFETY INFORMATION 3

A. PRECAUTIONS 3

B. WHEN SERVICING THE WATER HEATING SYSTEM 3

PART 2 – PREPARE THE STORAGE TANK 3

A. SPECIFICATIONS AND PERFORMANCE RATINGS 4

B. LOCATING THE STORAGE TANK 4

PART 3 –PIPING 6

A. PLUMBING 6

B. TANKLESS COIL CONNECTIONS 6

C. HOT WATER OUTLET 6
D. TYPICAL INSTALLATION 8
E. POTABLE EXPANSION TANK 9
PART 4 – CONTROL AND WIRING 9
A. CONTROL 9
B. WIRING 9
PART 5 – OPERATING THE STORAGE TANK 9
PART 6 – MAINTENANCE AND TROUBLESHOOTING 10
HTP CUSTOMER INSTALLATION RECORD FORM 12

PART 1 – GENERAL SAFETY INFORMATION

A. PRECAUTIONS

This storage tank is approved for indoor installations only. Clearance to combustible materials: 0” top, bottom, sides and back. Tank must have room for service: 24” front and 6” sides are minimum recommended service clearances. (A combustible door or removable panel is acceptable front clearance.) This storage tank has been approved for closet installation, and installation on combustible flooring. Install in a location where temperature and pressure relief valve discharge or a leak will not result in damage to the surrounding area. If such a location is not available, install an auxiliary catch pan.

⚠ WARNING

INSTALLER – Read all instructions in this manual before installing. Perform steps in the order given.

USER – This manual is for use only by a qualified heating installer/service technician. Have this storage tank serviced/inspected by a qualified service technician annually.

FAILURE TO ADHERE TO THE GUIDELINES ON THIS PAGE CAN RESULT IN SUBSTANTIAL PROPERTY DAMAGE, SEVERE PERSONAL INJURY, OR DEATH.

DO NOT USE THIS STORAGE TANK IF ANY PART HAS BEEN UNDERWATER. Immediately call a qualified service technician.

⚠ WARNING

NOTE: If the storage tank is exposed to the following, do not operate until all corrective steps have been made by a qualified serviceman:

1. FIRE
2. DAMAGE
3. WATER

Any claims for damage or shortage in shipment must be filed immediately against the transportation company by the consignee.

B. WHEN SERVICING THE WATER HEATING SYSTEM

- To avoid electric shock, disconnect electrical supply before performing maintenance.
- To avoid severe burns, allow all related water heating equipment to cool before servicing.

PART 2 – PREPARE THE STORAGE TANK

CAUTION

UNCRATING STORAGE TANK – Any claims for damage or shortage in shipment must be filed immediately against the transportation company by the consignee.

CAUTION

COLD WEATHER HANDLING – If the storage tank has been stored in a very cold location (BELOW 0°F) before installation, handle with care until the plastic components come to room temperature.

Remove all sides of the shipping crate to allow the storage tank to be moved into its installation location.

A. SPECIFICATIONS AND PERFORMANCE RATINGS

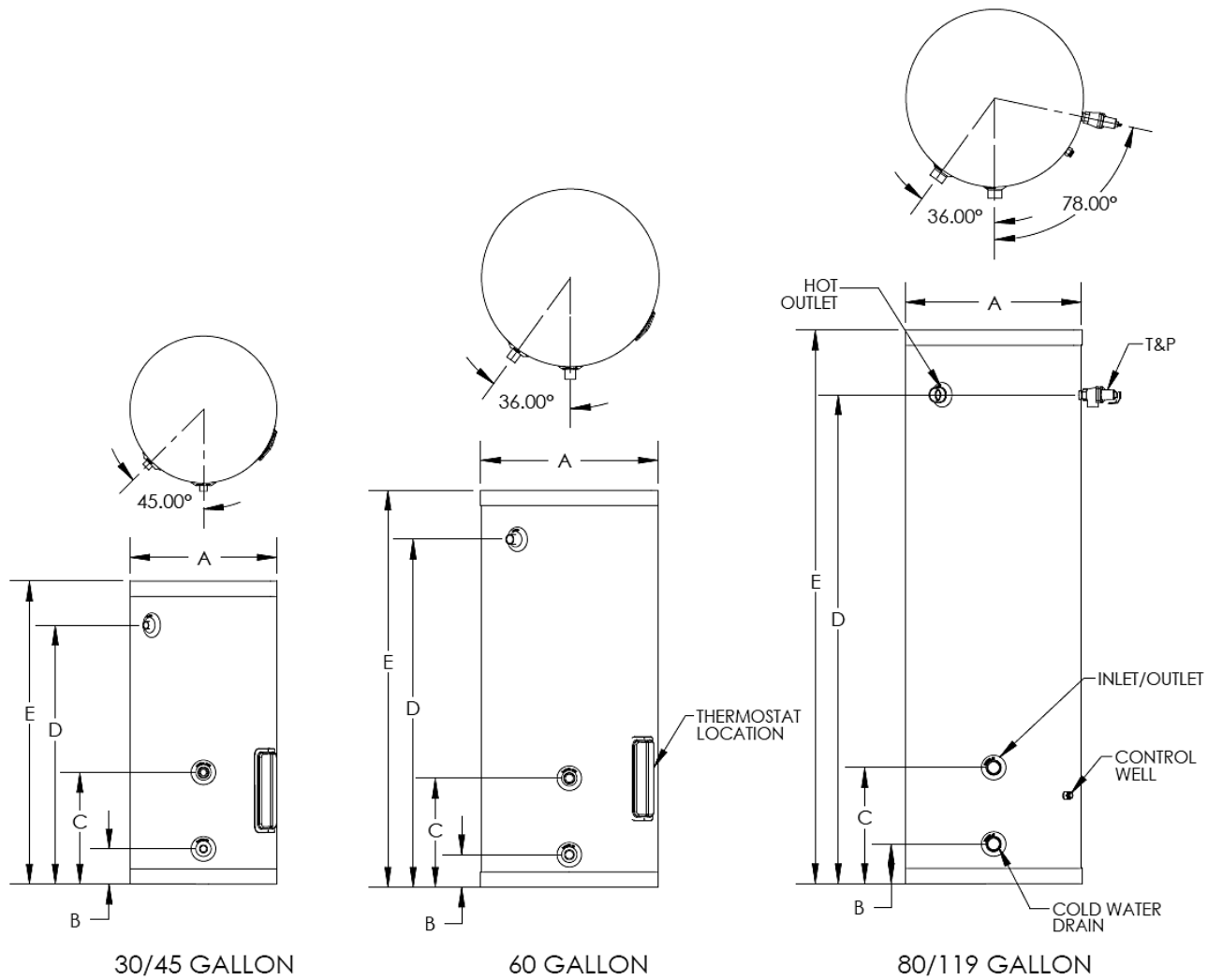

DIMENSIONS									
MODEL	A	B	C	D	E	TEST PRESSURE	WORKING PRESSURE	WEIGHT (LBS)	CONNECTION SIZES
SSU-30CB	19-1/4"	4-1/2"	14-1/2"	33-3/4"	39-1/2"	300 PSI	150 PSI	40	3/4" NPT
SSU-45CB	19-1/4"	4-1/2"	14-1/2"	45-3/4"	59-1/2"	300 PSI	150 PSI	64	3/4" NPT
SSU-60CB	23-1/4"	4-1/2"	14-1/2"	45-3/4"	52-1/2"	300 PSI	150 PSI	90	1" NPT
SSU-80CB	23-1/4"	6"	16"	64-3/4"	72"	300 PSI	150 PSI	129	1-1/2" NPT
SSU-119CB	27"	7-1/4"	17-1/4"	66"	73-1/2"	300 PSI	150 PSI	178	1-1/2" NPT

LP-32-C
02/16/11

Figure 1

B. LOCATING THE STORAGE TANK

This storage tank is certified for indoor use only. DO NOT INSTALL OUTDOORS. Outdoor installations ARE NOT covered by warranty.

Choose a location for the storage tank as centralized to the piping system as possible. Also, locate the storage tank and domestic water piping where it will not be exposed to freezing temperatures. All piping should be insulated. Additionally, place the storage tank so that the drain, controls, and inlets/outlets are easily accessible.

This storage tank must be installed vertical on a level surface.

CAUTION
Locate the storage tank where any leakage from the relief valve, related piping, tank, or connections will not result in damage to surrounding areas or lower floors of the building. The storage tank should be located near a floor drain or installed in a drain pan. HTP will NOT be held liable for leakage damages.

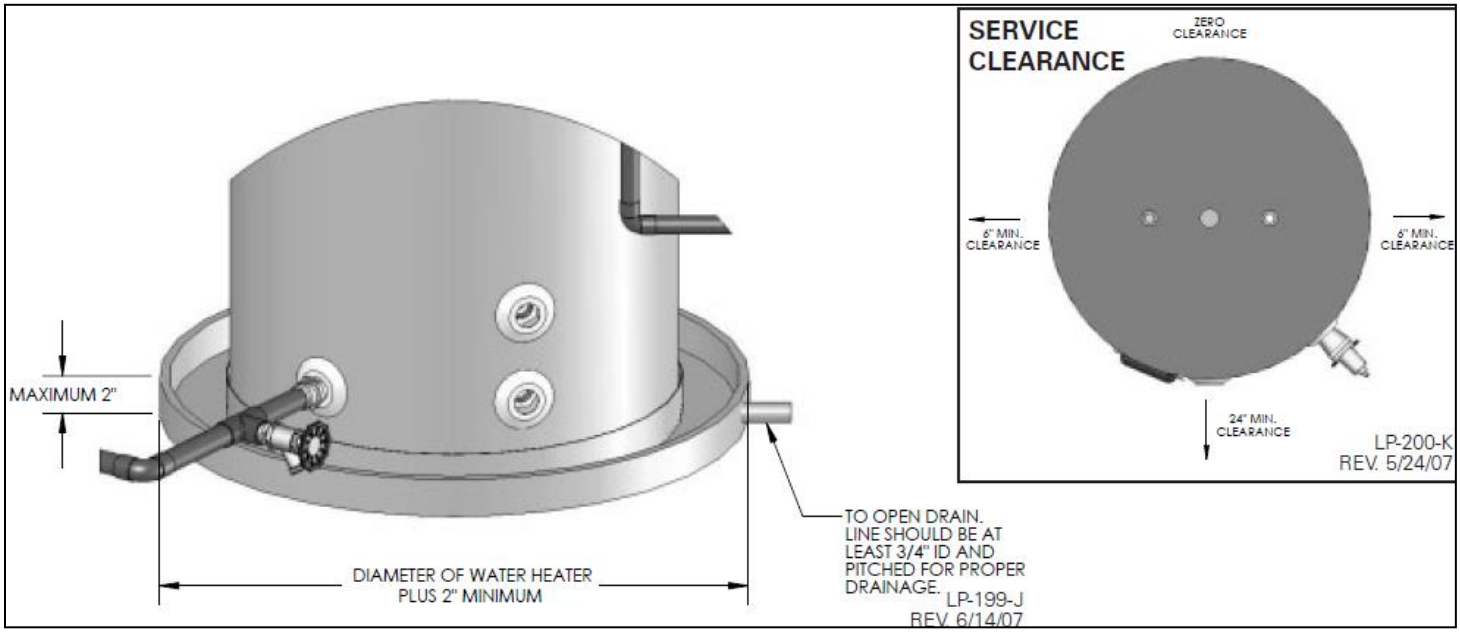

Figure 2

If you do not provide the minimum clearances shown, it might not be possible to service the storage tank without removing it from the space.

C. WATER CHEMISTRY REQUIREMENTS

CAUTION

Chemical imbalance of the water supply may affect efficiency and cause severe damage to the storage tank and associated equipment. HTP recommends having water quality professionally analyzed to determine whether it is necessary to install a water softener. It is important that the water chemistry on both the domestic hot water and central heating sides are checked before installing the storage tank, as water quality will affect the reliability of the system. Failure of a storage tank due to lime scale build-up, low pH, or other chemical imbalance IS NOT covered by the warranty.

CAUTION

Operating temperatures above 135°F will further accelerate the build-up of lime scale and may shorten the service life of the storage tank. Failure of the storage tank due to lime scale build-up on the heating surface, low pH, or other chemical imbalance IS NOT covered by the warranty.

Outlined below are water quality parameters which need to be met in order for the system to operate efficiently for many years.

Water Hardness
Water hardness is mainly due to the presence of calcium and magnesium salts dissolved in water. The concentration of these salts is expressed in mg/L, ppm, or grains per gallon as a measure of relative water hardness. Grains per gallon is the common reference measurement used in the U.S. water heater industry. Hardness expressed as mg/L or ppm may be divided by 17.1 to convert to grains per gallon. Water may be classified as very soft, slightly hard, moderately hard, or hard based on its hardness number. The minerals in the water precipitate out as the water is heated and cause accelerated lime scale accumulation on a heat transfer surface. This lime scale build-up may result in premature failure of the storage tank. Operating temperatures above 135°F will further accelerate the build-up of lime scale and may shorten the service life of the storage tank.

Water that is classified as hard and very hard must be softened.

CLASSIFICATION	MG/L OR PPM	GRAINS/GAL
Soft	0 – 17.1	0 - 1
Slightly Hard	17.1 – 60	1 – 3.5
Moderately Hard	60 – 120	3.5 – 7.0
Hard	120 – 180	7.0 – 10.5
Very Hard	180 and over	10.5 and over

If the hardness of the water exceeds the maximum level of 7 grains per gallon, water should be softened to a hardness level no lower than 5 grains per gallon. Water softened as low as 0 to 1 grain per gallon may be under-saturated with respect to calcium carbonate, resulting in water that is aggressive and corrosive.

pH of Water
pH is a measure of relative acidity, neutrality or alkalinity. Dissolved minerals and gases affect water pH. The pH scale ranges from 0 to 14. Water with a pH of 7 is considered neutral. Water with a pH lower than 7 is considered acidic. Water pH higher than 7 is considered alkaline. A neutral pH (around 7) is desirable for most potable water applications. **Corrosion damage and tank failures resulting from water pH levels of lower than 6 or higher than 8 ARE NOT covered by the warranty.** The ideal pH range for water used in a storage tank or a water heater system is 7.2 to 7.8.

Total Dissolved Solids
Total Dissolved Solids (TDS) is a measurement of all minerals and solids dissolved in a water sample. The concentration of total dissolved solids is usually expressed in parts per million (ppm).

Water with a high TDS concentration will greatly accelerate lime and scale formation in the hot water system. Most high TDS concentrations precipitate out of the water when heated. This can generate a scale accumulation that will greatly reduce the service life of a storage tank.

The manufacturer of the storage tank has no control over water quality, especially TDS levels in your system. Total dissolved solids in excess of 2,000 ppm will accelerate lime and scale formation in the storage tank. Storage tank failure due to total dissolved solids in excess of 2,000 ppm is a non-warrantable condition. **Failure of a storage tank due to lime scale build up IS NOT covered by the warranty.**

Hardness: 7 grains
Chloride levels: 100 ppm
pH levels: 6-8
TDS: 2000 ppm
Sodium: 20 mGL

PART 3 –PIPING

A. PLUMBING
It is mandatory that all plumbing be done in accordance with federal, local, and state plumbing codes and practices. Failure to properly install the storage tank WILL VOID the warranty. It is also necessary to use both thread tape and pipe dope on all mechanical plumbing connections.

CAUTION
Never use dielectric fittings or galvanized steel fittings on any domestic water connections. Use only copper or brass fittings. Failure to follow this caution will result in premature failure. Such failure is NOT covered by warranty.

CAUTION
The use of heat, such as blow torches, near the tank, may cause distortion to the high density polyethylene wrapper. Such damage is NOT covered by warranty. Exercise caution whenever using heat sources near tank.

CAUTION
When filling the storage tank, open a hot water tap to release air in the tank and piping. Failure to do so could lead to improper storage tank operation.

B. TANKLESS COIL CONNECTIONS
Use a ¾” nominal minimum pipe size. On the tank, tankless inlet is to be connected to a bronze or stainless steel circulator with the arrow pointing away from the tank and toward the tankless coil. This pipe will also have a tee for the cold supply to the tankless coil. (An optional check valve may be installed between the cold supply line and circulator to prevent short circulating the tankless coil. This may cause poor supply pressure, or noisy operation, depending upon the type of installation.)

On the tank, tankless outlet, use both thread tape and pipe dope and connect a ¾” NPT brass tee. On the run, install a brass drain valve. In the branch, install a ¾” (minimum) tube adapter, and connect this to the hot tankless coil outlet on the boiler.

NOTE: See “TYPICAL INSTALLATION”, page 8.

C. HOT WATER OUTLET
35 and 45 gallon storage tanks: Use both thread tape and pipe dope to connect a ¾” NPT brass tee. In the run of the brass tee, install a ¾” NPT brass T&P long element for hot water storage tanks, required by local codes, but not less than a valve certified for meeting the requirements for relief valves for hot water heaters (ANSI Z21.22 and CAN1-4.4) by a nationally recognized lab that

maintains periodic inspection of production of listed equipment. The T&P valve must be plumbed down, so discharge will exit at least 6” above the structural floor and not contact any live electrical parts. In the bottom of the tee (Branch) vertically down, install a ¾” NPT x ¾” (minimum) tube adapter. Then install two ¾” (minimum) sweat street 90 degree elbows.

60 gallon storage tanks: Use both thread tape and pipe dope to connect a 1” NPT brass tee. In the run of the brass tee, install a 1” NPT brass T&P long element for hot water storage tanks, required by local codes, but not less than a valve certified for meeting the requirements for relief valves for hot water heaters (ANSI Z21.22 and CAN1-4.4) by a nationally recognized lab that maintains periodic inspection of production of listed equipment. The T&P valve must be plumbed down, so discharge will exit at least 6” above the structural floor and not contact any live electrical parts. In the bottom of the tee (Branch) vertically down, install a 1” NPT x 1” (minimum) tube adapter. Then install two 1” (minimum) sweat street 90 degree elbows.

80 and 119 gallon storage tanks: Use 1 ½” NPT nominal pipe size. A T&P port is included on 80 and 119 gallon tanks.

NOTE: For more information, see “TYPICAL INSTALLATION”, page 8.

⚠ WARNING

To avoid water damage or scalding due to relief valve operation:

- Discharge line must be connected to relief valve outlet and run to a safe place of disposal. Terminate the discharge line in a manner that will prevent possibility of severe burns or property damage should the relief valve discharge.
- Discharge line must be as short as possible and the same size as the valve discharge connection throughout its entire length.
- Discharge line must pitch downward from the valve and terminate at least 6” above the floor drain, making discharge clearly visible.
- The discharge line shall terminate plain, not threaded, with a material serviceable for temperatures of 375°F or greater.
- Do not pipe discharge to any location where freezing could occur.
- No valve may be installed between the relief valve and storage tank or in the discharge line. Do not plug or place any obstruction in the discharge line.
- Test the operation of the relief valve after filling and pressurizing the system by lifting the lever. Make sure the valve discharges freely. If the valve fails to operate correctly, immediately replace with a new properly rated relief valve.
- Test T&P valve at least once annually to ensure the waterway is clear. If valve does not operate, turn the heating system “off” **and call a plumber immediately.**
- Take care whenever operating relief valve to avoid scalding injury or property damage.

FAILURE TO COMPLY WITH THE ABOVE GUIDELINES COULD RESULT IN FAILURE OF RELIEF VALVE OPERATION, RESULTING IN POSSIBILITY OF SUBSTANTIAL PROPERTY DAMAGE, SEVERE PERSONAL INJURY, OR DEATH.

⚠ DANGER

⚠ DANGER **Water temperature over 125 degrees F. can cause severe burns instantly, or death from scalds. Children, disabled, and elderly are at highest risk of being scalded. See instruction manual before setting temperature at water heater. Feel water before bathing or showering! Temperature limiting valves are available. See chart below showing temperature burn rate.** **⚠ DANGER**

⚠ WARNING

Do not thread a cap or plug into the relief valve under any circumstances! Explosion and property damage, serious injury, or death may result.

⚠ WARNING

RE-INSPECTION OF T&P RELIEF VALVES: T&P valves should be inspected AT LEAST ONCE EVERY THREE YEARS, and replaced, if necessary, by a licensed plumbing contractor or qualified service technician, to ensure that the product has not been affected by corrosive water conditions and to ensure that the valve and discharge line have not been altered or tampered with illegally. Certain naturally occurring conditions may corrode the valve and its components over time, rendering the valve inoperative. Such conditions can only be detected if the valve and its components are physically removed and inspected. **Do not attempt to conduct an inspection on your own.** Contact your plumbing contractor for a re-inspection to assure continued safety.

FAILURE TO RE-INSPECT THIS VALVE AS DIRECTED COULD RESULT IN UNSAFE TEMPERATURE AND/OR PRESSURE BUILDUP WHICH CAN RESULT IN SEVERE PROPERTY DAMAGE, SERIOUS PERSONAL INJURY, OR DEATH.

D. TYPICAL INSTALLATION

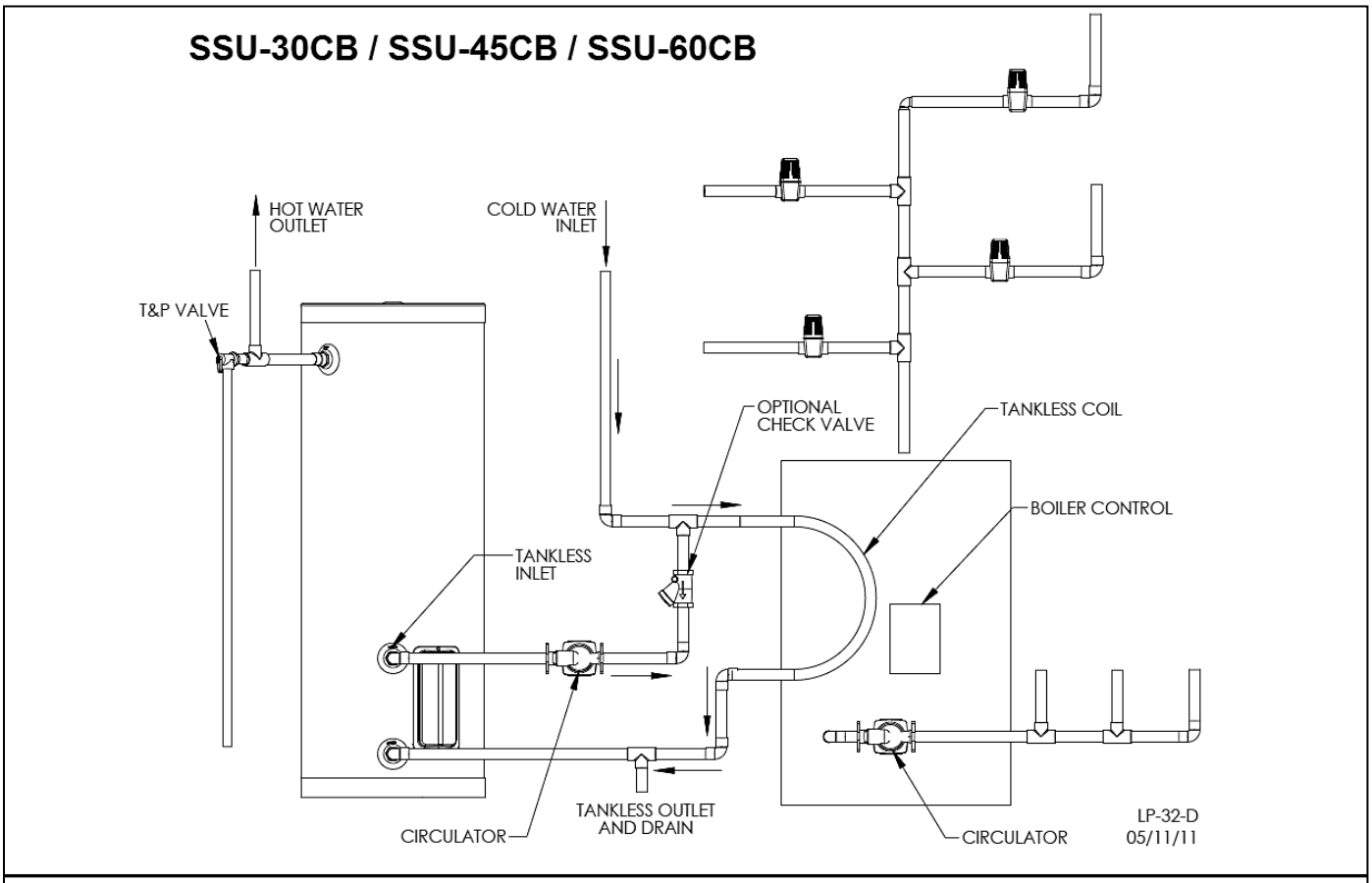

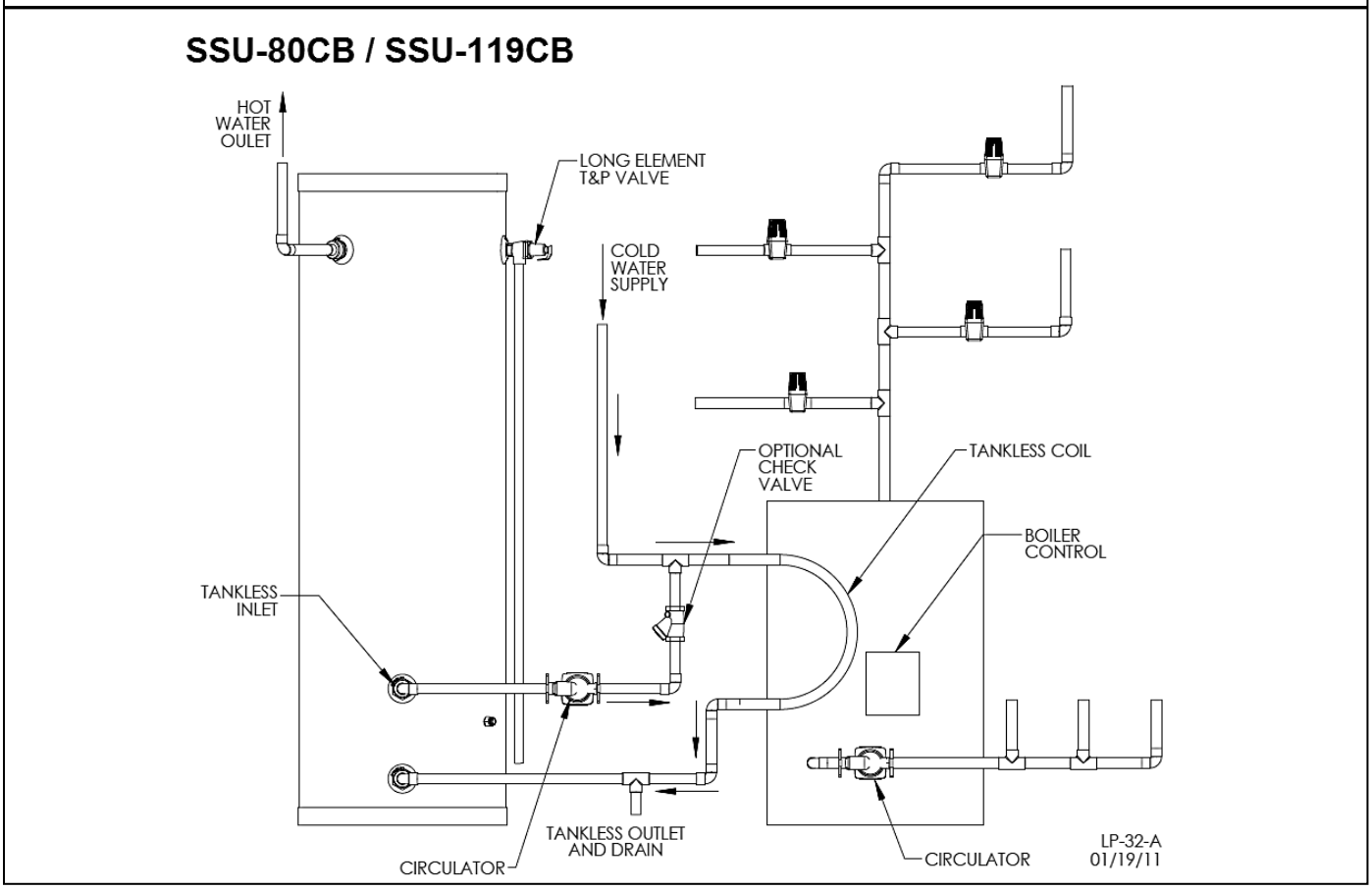

Figure 3 – Typical Storage Tank Installation

NOTE: If a backflow preventer or no return valve is installed, a thermal expansion tank is required on the cold water inlet between the storage tank and backflow preventer.

E. POTABLE EXPANSION TANK

A thermal expansion tank is required in the system designed for potable water use, to offset the expansion of stored water as the temperature is elevated.

PART 4 – CONTROL AND WIRING

A. CONTROL

A pre-wired surface mount control is provided on your storage tank. Temperature may be set by removing lower cover screw and lower cover. **VERY IMPORTANT: SEE SCALDING NOTE ON PAGE 10.**

B. WIRING

All wiring is to be done in accordance with all applicable local and state codes. Turn off all power related to the boiler before starting any wiring procedures.

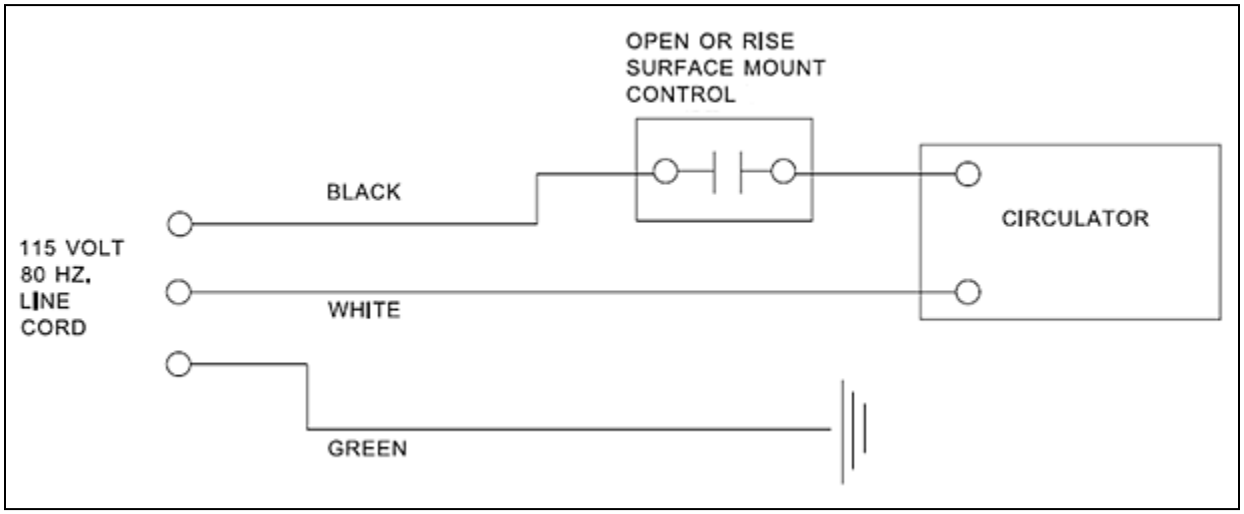

Figure 4 – Wiring the Control

PART 5 – OPERATING THE STORAGE TANK

Boiler high limit should be set at least 20°F higher than the storage tank temperature setting. Set the low limit of the boiler control at the minimum setting – this will call the burner on only to satisfy the tank control.

We recommend a storage tank temperature setting of 120°F. However, a lower temperature setting may be required to comply with local and state codes for normal operation. You may prefer a setting of either higher or lower water temperature. A mixing valve in conjunction with a high temperature setting may be used for high demand applications (spas, hot tubs, whirlpools).

CAUTION
If draining of the storage tank is necessary, open the temperature and pressure valve or a hot water tap to prevent vacuum buildup in the tank and piping.

⚠ **WARNING**
A temperature limiting or mixing valve is not entirely necessary, but recommended in installations servicing disabled or elderly persons, or children. Take extreme caution to avoid scalding when temperature limiting or mixing valves are not used.

⚠ DANGER

⚠ DANGER Water temperature over 125 degrees F. can cause severe burns instantly, or death from scalds. Children, disabled, and elderly are at highest risk of being scalded. See instruction manual before setting temperature at water heater. Feel water before bathing or showering! Temperature limiting valves are available. See chart below showing temperature burn rate. **⚠ DANGER**

A water heating system can deliver scalding water. Be careful whenever using hot water to avoid scalding injury. Certain appliances, such as dishwashers and automatic clothes washers, may require increased water temperature. By setting the thermostat to obtain the increased water temperature required by these appliances, you may create the potential for scald injury.

To protect against injury, you should install a mixing valve in the water system. This valve will reduce point of discharge temperature by mixing cold and hot water in branch supply lines. Such valves are available from your local plumbing supplier.

Table 1 details the relationship of water temperature and time with regard to scald injury and may be used as a guide in determining the safest water temperature for your applications.

⚠ WARNING

Risk of scald injury increases as you increase water temperature.

APPROXIMATE TIME / TEMPERATURE RELATIONSHIPS IN SCALDS	
120°F	More than 5 minutes
125°F	1 ½ to 2 minutes
130°F	About 30 seconds
135°F	About 10 seconds
140°F	Less than 5 seconds
145°F	Less than 3 seconds
150°F	About 1 ½ seconds
155°F	About 1 second

Table 1

PART 6 – MAINTENANCE AND TROUBLESHOOTING

Periodic maintenance should be performed by a qualified service technician to assure that all the equipment is operating safely and efficiently. The owner should make necessary arrangements with a qualified heating contractor for periodic maintenance. Installer must also inform the owner that the lack of proper care and maintenance of the water heating system may result in a hazardous condition.

INSPECTION ACTIVITIES		DATE LAST COMPLETED			
SYSTEM		1st YEAR	2nd YEAR	3rd YEAR	4th YEAR*
Piping	Check system piping for any sign of leakage; make sure pipes are properly supported.				
Visual	Do a full visual inspection of all system components.				
Functional	Test all functions of the system				
Temperatures	*Verify safe settings on Mixing Valve				
ELECTRICAL					
Smoke and CO detector	*Verify devices are installed and working properly. Change batteries if necessary.				
Circuit Breakers	Check to see that the circuit breaker is clearly labeled. Exercise circuit breaker.				
Connections	Check wire connections. Make sure they are tight.				
RELIEF AND DRAIN VALVE					
Relief Valve	Lift and release the relief valve on the storage tank. Make certain that the valve operates properly by allowing several gallons to flush through the discharge line. Replace if valve is blocked or does not operate properly. **NOTE: DISCHARGED WATER MAY PRESENT A SCALD RISK. TAKE CAUTION WHEN OPERATING RELIEF VALVE.**				
Drain Valve	Open the drain valve and drain a few quarts of water from the bottom of the tank to flush any hard water deposits. Replace if valve is blocked or does not operate properly. **NOTE: DRAINED WATER MAY PRESENT A SCALD RISK. TAKE CAUTION WHEN OPERATING DRAIN VALVE.**				
FINAL INSPECTION					
Check list	Verify that you have completed entire check list. WARNING: FAILURE TO DO SO COULD RESULT IN SERIOUS INJURY OR DEATH				
Homeowner	Review what you have done with the homeowner.				
INITIAL AND DATE AFTER INSPECTION/SERVICE. CONTINUE INSPECTIONS ON ANNUALLY BEYOND THE FOURTH YEAR.					

Table 2 - *If applicable to system.

TROUBLESHOOTING	
NO HOT WATER	
PROBLEM	**POSSIBLE SOLUTION**
Zone valve not opening	Open manually to replace.
Circulator not operating	Check or replace
Tank control set too low	Raise tank temperature* (SEE NOTE BELOW)
Boiler control set too low	Raise boiler temperature
Wiring incorrect	Recheck wiring
Tank control failure	Replace control
Zone valve failure	Replace valve
Circulator failure	Replace circulator
Air trap in loop	Purge air
NOT ENOUGH HOT WATER	
PROBLEM	**POSSIBLE SOLUTION**
Zone valve restriction	1” full bore replace zone valve
Circulator arrow reversed	Reverse circulator
Tank temperature too low	Raise tank temperature* (SEE NOTE BELOW)
Boiler temperature too low	Raise boiler temperature
Boiler sized too small	Check sizing chart
Tank sized too small	Check sizing chart
Demand flow rate too high	Install mixing valve, raise tank temperature*
Air trap in loop	Purge to remove air
	Install flow regulator
Heat and tank come on together	Recheck wiring or coincidence
	Draw tank down and lower thermostat. Recheck.
Not enough space heat	Boiler sized too small. Consult chart.
Slow recovery	Circulator head capacity too low
T & P VALVE DISCHARGES	
PROBLEM	**POSSIBLE SOLUTION**
Tank temperature too high	Lower temperature on tank
Water expands when heated	Install expansion tank
Water pressure too high	Install pressure reducing valve
HOT TUBS, SPAS, MULTIPLE SHOWERS, HIGH DEMAND	
PROBLEM	**POSSIBLE SOLUTION**
Pressure too low	Check line pressure for restriction
Recovery of tank slow	Slow startup boiler. See chart.
Not enough hot water	Boiler sized too small. See chart.
	Check flow rate and compare to chart
	Demand too great. Check flow rates and compare to chart. Install mixing valve and/or flow restricting valve and raise tank and boiler temperature*.

Table 3 - *See scald warning below.

⚠ WARNING

When raising tank temperature, the risk of scald injury increases. To avoid scald injury, use a water tempering or mixing valve and extreme caution when using hot water. Consult codes for conformance.

⚠ DANGER

Water temperature over 125 degrees F. can cause severe burns instantly, or death from scalds. Children, disabled, and elderly are at highest risk of being scalded. See instruction manual before setting temperature at water heater. Feel water before bathing or showering! Temperature limiting valves are available. See chart below showing temperature burn rate.

HTP CUSTOMER INSTALLATION RECORD FORM

The following form should be completed by the installer for you to keep as a record of the installation in case of a warranty claim. After reading the important notes at the bottom of the page, please also sign this document.

Customer's Name:	
Installation Address:	
Date of Installation:	
Installer's Code/Name:	
Product Serial Number(s):	
Comments:	
Installer's Phone Number:	
Signed by Installer:	
Signed by Customer:	

IMPORTANT:

Customer: Please only sign after the installer has reviewed the installation, safety, proper operation, and maintenance of the system. In the case that the system has any problems, please call the installer. If you are unable to make contact, please contact your HTP Sales Representative.

Distributor/Dealer: Please insert contact details.