M3ST80R5

BRADFORD WHITE®
WATER HEATERS
Ambler, PA

For U.S. and Canada field service,
contact your professional installer or
local Bradford White sales representative.

Sales/**800-523-2931**
*Fax/**215-641-1670***
*Parts Fax/**215-641-2180***

Technical Support/**800-334-3393**
*Fax/**269-795-1089***

Warranty/**800-531-2111**
*Fax/**269-795-1089***

International:
Telephone/**215-641-9400**
*Telefax/**215-641-9750***

BRADFORD WHITE-CANADA® INC.
Mississauga, ON

Sales/**866-690-0961**
905-238-0100

*Fax/**905-238-0105***

Technical Support/**800-334-3393**

Email
parts@bradfordwhite.com
techserv@bradfordwhite.com

www.bradfordwhite.com

Internet Version for Reference Only

STORAGE UNIT

A Spanish language version of these instructions is available by contacting the manufacturer listed on the rating plate.
La version espanola de estas instrucciones se puede obtener al escribirle a la fábrica cuyo nombre aparece in la placa de especificaciones.

INSTALLATION & OPERATING INSTRUCTION MANUAL

THE WARRANTY ON THIS STORAGE UNIT IS IN EFFECT ONLY WHEN THE STORAGE UNIT IS INSTALLED AND OPERATED IN ACCORDANCE WITH LOCAL CODES AND THESE INSTRUCTIONS. THE MANUFACTURER OF THIS STORAGE UNIT WILL NOT BE LIABLE FOR ANY DAMAGE RESULTING FROM FAILURE TO COMPLY WITH THESE INSTRUCTIONS. READ THESE INSTRUCTIONS THOROUGHLY BEFORE STARTING.

For your family's comfort, safety and convenience, it is recommended this storage unit be installed and serviced by a plumbing professional.

238-35768-00K REV 05/06

Internet Version for Reference Only

TABLE OF CONTENTS

General Information 3

Installation 5

Locating The Storage Unit..... 5

Water Connections 7

General Operation 11

Maintenance..... 12

Notes 16

CONGRATULATIONS!

You have just purchased one of the finest storage units on the market today!

This installation, operation and instruction manual will explain in detail the installation and maintenance of your new storage unit. We strongly recommend that you contact a plumbing professional for the installation of this storage unit.

We require that you carefully read this manual, as well as the enclosed warranty, and refer to it when questions arise. If you have any specific questions concerning your warranty, please consult the plumbing professional from whom your storage unit was purchased. For your records we recommend that you write the model, serial number and installation date of your storage unit in the maintenance section in the back of this manual.

This manual should be kept with the water heater.

Internet Version for Reference Only

GENERAL INFORMATION

This storage unit must be installed in accordance with local codes. In the absence of local codes, install this storage unit in accordance with the N.E.C. Reference Book (latest edition).

The warranty for this storage unit is in effect only when the storage unit is installed, adjusted, and operated in accordance with these Installation and Operating Instructions. The manufacturer will not be held liable for damage resulting from alteration and/or failure to comply with these instructions.

These instructions apply only to this storage unit. Other components of the system should be installed in accordance with the instructions provided by the manufacturer.

State and local codes may supersede suggestions made in this Installation and Operating Instruction manual.

This storage unit shall be used in conjunction with an existing water heater or hot water boiler.

⚠ CAUTION

Incorrect operation of this appliance may create a hazard to life and property and will nullify the warranty.

⚠ DANGER

Do not store or use gasoline or other flammable, combustible, or corrosive vapors or liquids in the vicinity of this or any other appliance.

A sacrificial anode is used to extend tank life. Removal of this anode, for any reason, will nullify the warranty. In areas where water is unusually active, an odor may occur at the hot water faucet due to a reaction between the sacrificial anode and impurities in the water. If this should happen, an alternative anode may be purchased from the supplier that can be installed in this storage unit. This will minimize the odor while protecting the tank. Additionally, the storage unit should be flushed with appropriate dissolvers to eliminate any bacteria.

Internet Version for Reference Only

IMPORTANT

Before proceeding, please inspect the storage unit and it's components for possible damage. DO NOT install any damaged components. If damage is evident, please contact the supplier where the storage unit was purchased or the manufacturer listed on the rating plate for replacement parts.

Massachusetts Code Compliance:
If total tank volume exceeds 120 gallons and/or recovery rate is 200,000 btu/hr or greater, all system components shall be ASME.
Exception: Single family residences.

Internet Version for Reference Only

INSTALLATION

Locating The Storage Unit

⚠ WARNING

To avoid damage or injury, there shall be no materials stored against the storage unit and proper care shall be taken to avoid unnecessary contact (especially by children) with the storage unit. **UNDER NO CIRCUMSTANCES SHALL FLAMMABLE MATERIALS, SUCH AS GASOLINE OR PAINT THINNER BE USED OR STORED IN THE VICINITY OF THIS STORAGE UNIT OR ANY LOCATION FROM WHICH FUMES COULD REACH THE STORAGE UNIT.**

This storage unit must NOT be installed in any location where gasoline or flammable vapors are likely to be present, unless the installation is such to eliminate the probable ignition of gasoline or flammable vapors.

The location this storage unit is to be installed is of utmost importance. Before installing this storage unit, consult the installation section of these instructions. After reading these installation and operating instructions, select a location for the storage unit where the floor is level and is easily accessible to a power supply and water connections. It is recommended that the storage unit be located near the center of greatest hot water usage to prevent heat loss through the pipes. **DO NOT locate the storage unit where water lines could be subjected to freezing temperatures. Locate the storage unit so that access panels and drain valves are accessible.**

Storage unit corrosion and component failure can be caused by the heating and breakdown of airborne chemical vapors. Examples of some typical compounds that are potentially corrosive are: spray can propellants, cleaning solvents, refrigerator and air conditioning refrigerants, swimming pool chemicals, calcium or sodium chloride, waxes and process chemicals. These materials are corrosive at very low concentration levels with little or no odor to reveal their presence. **NOTE: DAMAGE TO THE STORAGE UNIT CAUSED BY EXPOSURE TO CORROSIVE VAPORS IS NOT COVERED BY THE WARRANTY. DO NOT OPERATE THE STORAGE UNIT IF EXPOSURE HAS OR WILL OCCUR. DO NOT STORE ANY POTENTIALLY CORROSIVE COMPOUNDS IN THE VICINITY OF THE STORAGE UNIT.**

Internet Version for Reference Only

Locating The Storage Unit continued-

This storage unit must be located in an area where leakage of the tank or water line connections and the combination temperature and pressure relief valve will not result in damage to the area adjacent to the storage unit or to lower floors of the structure. When such locations cannot be avoided, a suitable drain pan must be installed under the storage unit. The drain pan must have a minimum length and width of at least 4 in. (10.2 cm) greater than the diameter of the water heater. The drain pan, as described above, can be purchased from your plumbing professional. The drain pan must be piped to an adequate drain. The piping must be at least 3/4 in *(1.9 cm)* in diameter and pitched for proper drainage.

This storage unit MUST be installed indoors out of the wind and weather.

Note: For California installation this storage unit must be braced, anchored, or strapped to avoid falling or moving during an earthquake. See instructions for correct installation procedures. Instructions may be obtained from California Office of the State Architect, 400 P Street, Sacramento, CA 95814.

Internet Version for Reference Only

Water Connections

NOTE: BEFORE PROCEEDING WITH THE INSTALLATION, CLOSE THE MAIN WATER SUPPLY VALVE.

After shutting the main water supply valve, open a faucet to relieve the water line pressure to prevent any water from leaking out of the pipes while making the water connections to the storage unit. After the pressure has been relieved, close the faucet. The fittings at the circulating connections and the hot water outlet are dielectric waterway fittings with 2" NPT tapered male threads. Make the proper plumbing connections between the storage unit and the plumbing system in the structure. Install a shut-off valve in the cold water supply line.

⚠ CAUTION

If sweat fittings are to be used, **DO NOT** apply heat to the nipples on top of the storage unit. Sweat the tubing to the adapter before fitting the adapter to the water connections. It is imperative that heat is not applied to the nipples containing a plastic liner.

⚠ CAUTION

This storage unit does not contain a heat exchanger. Only potable water may be allowed to enter the tank.

If this storage unit is installed in a closed water supply system, such as the one having a back-flow preventer in the cold water supply, provisions shall be made to control thermal expansion. DO NOT operate this storage unit in a closed system without provisions for controlling thermal expansion. Your water supplier or local plumbing inspector should be contacted on how to control this situation.

After installation of the water lines, open the main water supply valve and fill the storage unit. While the storage unit is filling, open several hot water faucets to allow air to escape from the water system. When a steady stream of water flows through the faucets, close them, and check all water connections for possible leaks. **NEVER OPERATE THE STORAGE UNIT WITHOUT FIRST BEING CERTAIN IT IS FILLED WITH WATER.**

IMPORTANT

FAILURE TO INSTALL AND MAINTAIN A NEW, LISTED TEMPERATURE-PRESSURE RELIEF VALVE WILL RELEASE THE MANUFACTURER FROM ANY CLAIM WHICH MIGHT RESULT FROM EXCESSIVE TEMPERATURE AND PRESSURES.

Internet Version for Reference Only

⚠ WARNING

For protection against excessive temperatures and pressure, install temperature and pressure protective equipment required by local codes, but not less than a combination temperature and pressure relief valve certified by a nationally recognized testing laboratory that maintains periodic inspection of production of listed equipment or materials, as meeting the Requirements for *Relief Valves and Automatic Gas Shutoff Devices for Hot Water Supply Systems, ANSI Z21.22*, and the Standard *CAN1-4.4 Temperature, Pressure, Temperature and Pressure Relief Valves and Vacuum Relief Valves*. The combination temperature and pressure relief valve shall be marked with a maximum set pressure, not to exceed the maximum working pressure of the storage unit. The combination temperature and pressure relief valve shall also have an hourly rated temperature steam BTU discharge capacity not less than the hourly input rating of the water heater or boiler used in conjunction with this storage unit.

Install the combination temperature and pressure relief valve into the opening provided and marked for this purpose on the storage unit.

Note: Some models may already be equipped or supplied with a combination temperature and pressure relief valve. Verify that the combination temperature and pressure relief valve complies with local codes. If the combination temperature and pressure relief valve does not comply with local codes, replace it with one that does. Follow the installation instructions above on this page.

Install a discharge line so that water discharged from the combination temperature and pressure relief valve will exit within six (6) inches *(15.3 cm)* above, or any distance below the structural floor and cannot contact any live electrical part. The discharge line is to be installed to allow for complete drainage of both the temperature and pressure relief valve and the discharge line. The discharge opening must not be subjected to blockage or freezing. **DO NOT** thread, plug or cap the discharge line. It is recommended that a minimum of four (4) inches *(10.2 cm)* be provided on the side of the storage unit for servicing and maintenance of the combination temperature and pressure relief valve.

Do not place a valve between the combination temperature and pressure relief valve and the tank.

Internet Version for Reference Only

⚠ WARNING

Hydrogen gas can be produced in a hot water system served by this storage unit that has not been used for a long period of time (generally two weeks or more). Hydrogen gas is extremely flammable. To reduce the risk of injury under these conditions, it is recommended that the hot water faucet be opened for several minutes at the kitchen sink before using any electrical appliance connected to the hot water system. If hydrogen is present, there will probably be an unusual sound such as air escaping through the pipe as the water begins to flow. There should be no smoking or open flame near the faucet at the time it is open.

This storage unit can deliver scalding temperature water at any faucet in the system. Be careful whenever using hot water to avoid scalding injury. Certain appliances, such as dishwashers and automatic clothes washers, may require increased temperature water. By setting the thermostat in the water heating system to obtain increased temperature water required by these appliances, you might create the potential for scald injury. To protect against injury, you should install an ASSE approved mixing valve in the water system. This valve will reduce point of discharge temperature by mixing cold and hot water in branch supply lines. Such valves are available from the manufacturer of this storage unit or a local plumbing supplier. Please consult with a plumbing professional.

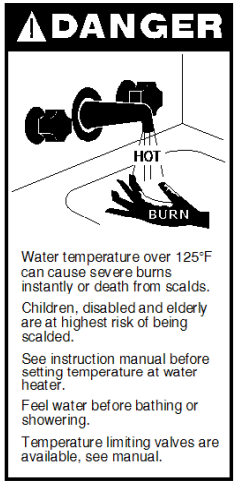

Internet Version for Reference Only

Water Connections continued-

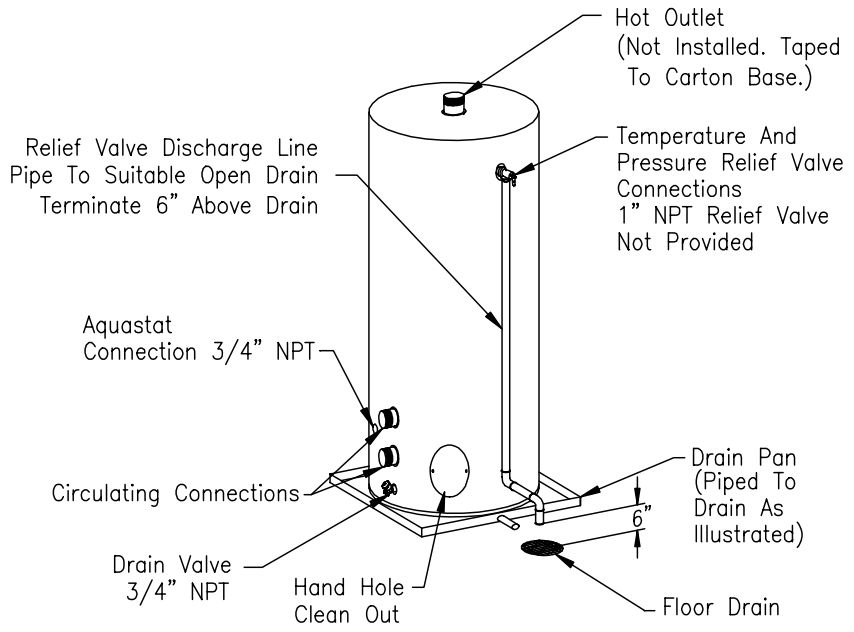

Internet Version for Reference Only

GENERAL OPERATION

⚠ CAUTION

Under certain conditions, water in this water heater/storage unit may become excessively hot. It is recommended that an ASSE approved mixing valve may be installed in the outlet line to reduce the risk of scald injury by preventing point of discharge water temperatures in excess of 140°F (60 °C).

Care must be taken whenever using hot water to avoid scalding injury. Certain appliances require high temperature hot water (such as dishwashers and automatic clothes washers).

TO FILL THE STORAGE UNIT

1. Close the water heater drain valve by turning the knob clockwise.
2. Open the cold water supply shut-off valve.
3. Open several hot water faucets to allow air to escape from the system.
4. When a steady stream of water flows from the faucets, the storage unit is filled. Close the faucets and check for water leaks at the storage unit drain valve, combination temperature and pressure relief valve and the hot and cold water connections.

TO DRAIN THE HEATER

1. Close the cold water supply shut-off valve.
2. Open the drain valve on the water heater by turning the knob counter-clockwise. The drain valve has threads on the end that will allow connection of a standard hose coupling.
3. Open a hot water faucet to allow air to enter the system.

To refill the storage unit, refer to “TO FILL THE STORAGE UNIT”.

Internet Version for Reference Only

MAINTENANCE

IMPORTANT

The storage unit should be inspected at a minimum of annually by a qualified service technician for damaged components. **DO NOT** operate this storage unit if any part is found damaged.

The storage unit should be drained completely to prevent freezing whenever the building is left unoccupied during the cold weather months. In order to insure efficient operation and long tank life, drain the storage unit at least once a month through the drain valve until the water runs clear. Failure to do this may result in noisy operation and lime and sediment buildup in the bottom of the tank. Check the temperature-pressure relief valve to insure that the valve has not become encrusted with lime. Lift the lever at the top of the valve several times until the valve seats properly without leaking and operates freely.

⚠ WARNING

When lifting lever of temperature-pressure relief valve, hot water will be released under pressure. Be certain that any released water does not result in bodily injury or property damage. The magnesium anode rod should be inspected periodically and replaced when necessary to prolong tank life.

The following maintenance checks should be performed by a qualified service technician at the minimum periodic intervals suggested below. In some installations, the maintenance interval may be more frequent depending on the amount of use and the operating conditions of the water heater. Regular inspection and maintenance of the storage unit will help to insure safe and reliable operation.

1. At least once a year, check the combination temperature and pressure relief valve to insure that the valve has not become encrusted with lime. Lift the lever at the top of the temperature-pressure relief valve several times until the valve seats properly without leaking and operates freely.

2. If the combination temperature and pressure relief valve on the appliance discharges periodically, this may be due to thermal expansion in a closed water supply system. Contact the water supplier or local plumbing inspector on how to correct this situation. Do not plug the combination temperature and pressure relief valve outlet for any reason.

Internet Version for Reference Only

⚠ WARNING

When lifting lever of temperature-pressure relief valve, hot water will be released under pressure. Be certain that any released water does not result in bodily injury or property damage.

3. Monthly, drain off a gallon of water from the storage unit to remove silt and sediment.

⚠ WARNING!: THIS WATER MAY BE HOT.

4. A combination sacrificial anode rod/hot water outlet nipple has been installed to extend tank life. The anode rod should be inspected periodically (every 2 years) and replaced when necessary to prolong tank life. Water conditions in your area will influence the time interval for inspection and replacement of the anode rod. Contact the plumbing professional who installed the storage unit or the manufacturer listed on the rating plate for anode replacement information. The use of a water softener may increase the speed of anode consumption. More frequent inspection of the anode is needed when using softened (or phosphate treated) water.

⚠ CAUTION

FOR YOUR SAFETY, **DO NOT** ATTEMPT TO REPAIR ANY DAMAGED COMPONENTS. REFER SUCH REPAIRS TO A QUALIFIED SERVICE TECHNICIAN.

Internet Version for Reference Only

Maintenance continued-

Contact your local plumbing supplier or plumbing professional for replacement parts or contact the company at the address displayed on the rating plate of the storage unit.

For faster and better service, please provide the part name, model, and serial number(s) of the storage unit(s) when ordering parts.

READ THE WARRANTY FOR A FULL EXPLANATION OF THE LENGTH OF TIME THAT PARTS AND THE WATER HEATER ARE WARRANTED.

Manufactured under one or more of the following U.S. Patents: Re. 34,534; 4,416,222; 4,628,184; 4,669,448; 4,672,919; 4,808,356; 4,829,983; 4,861,968; 4,904,428; 5,000,893; 5,023,031; 5,052,346; 5,081,696; 5,092,519; 5,115,767; 5,199,385; 5,277,171; B1 5,341,770; 5,372,185; 5,485,879; 5,574,822; 5,596,952; 5,660,165; 5,682,666; 5,761,379; 5,943,984; 5,954,492; 5,988,117; 6,684,821. Other U.S. and Foreign patents applications pending. Current Canadian Patents: 1,272,914; 1,280,043; 1,289,832; 2,045,862; 2,092,105; 2,107,012; 2,108,186; 2,112,525.

Complete the following information and retain for future reference:

Model No:_____

Serial No:_____

Service Phone
Days:_____ Nights:_____

Address:_____

Supplier:_____

Supplier Phone No:_____

Internet Version for Reference Only

TYPICAL INSTALLATIONS

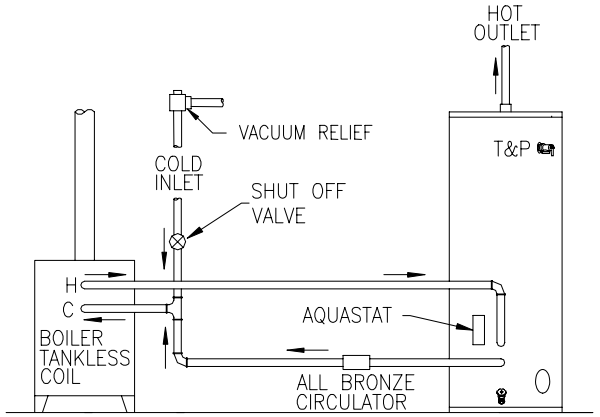

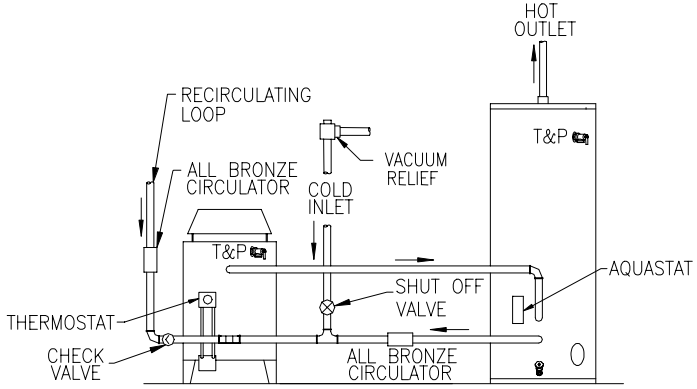

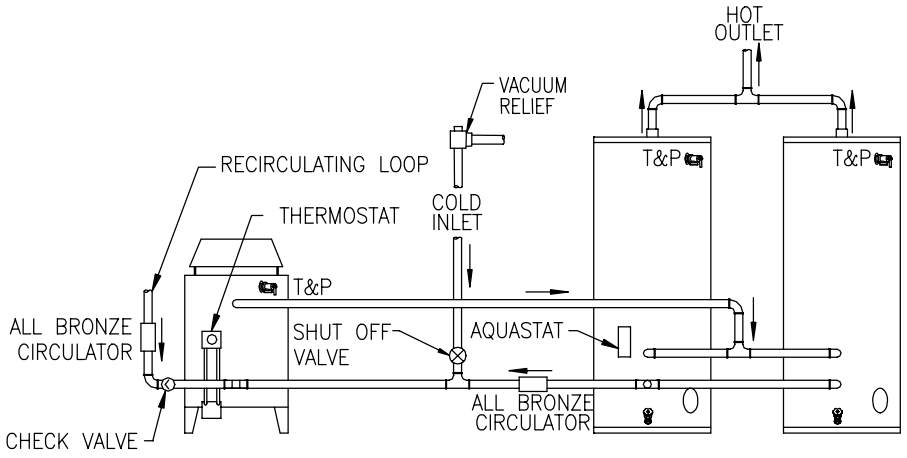

BRADFORD WHITE®

WATER HEATERS

COMMERCIAL REPLACEMENT PARTS LIST

80, 120 and 200 Gallon Storage Tank Models



Effective: March, 2012
ECO 7496

NOTE: BOTH MODEL AND SERIAL NUMBERS ARE REQUIRED FOR ORDERING REPLACEMENT PARTS

Dimensions and specifications subject to change without notice.

Parts Book #238-44543-00C

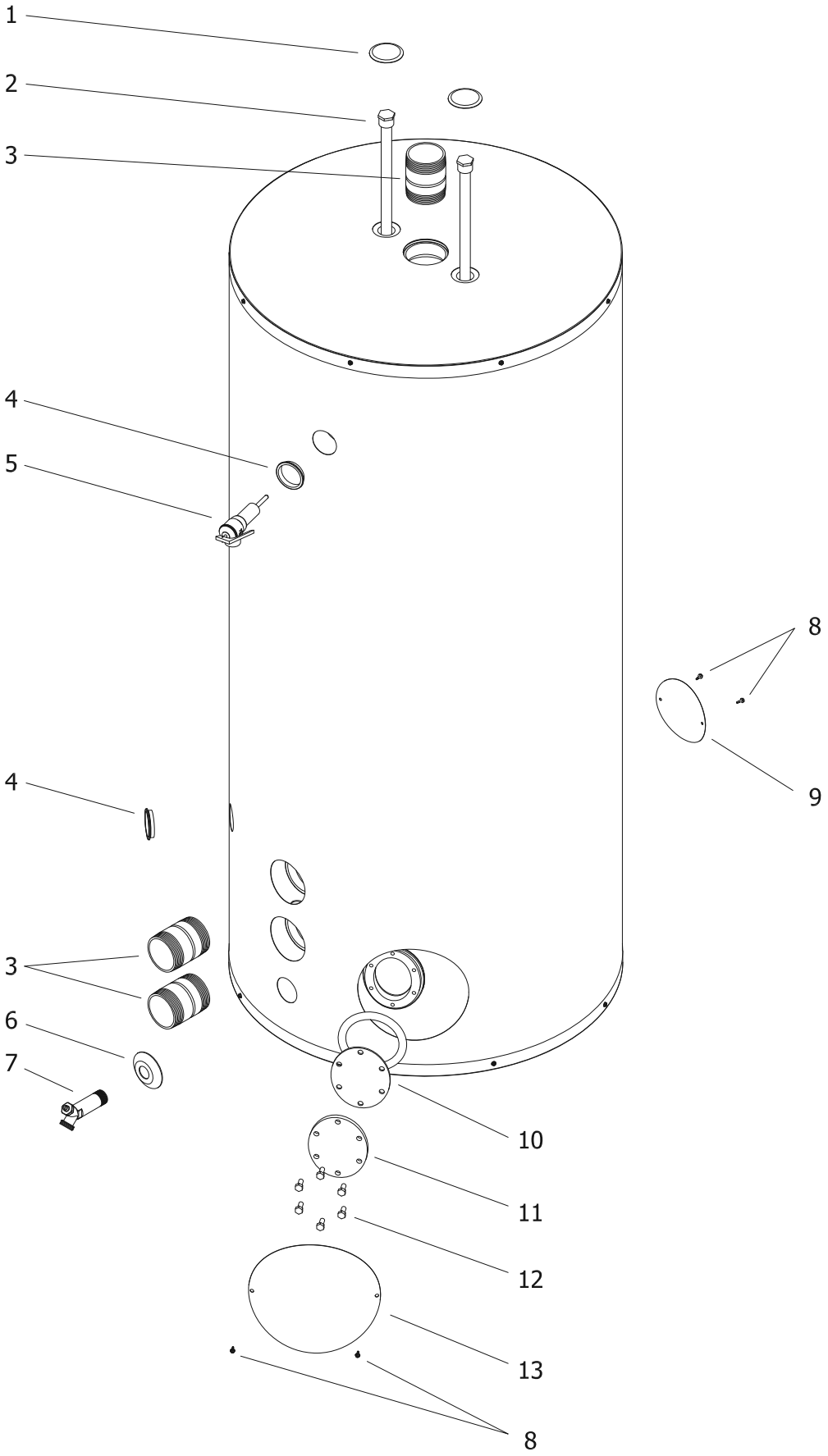

BRADFORD WHITE®
WATER HEATERS

Item	Description	Model M3ST80R5	Model M3ST80R5A	Model M3ST120R5	Model M3ST120R5A	Model M3ST200R5A
1	Hole Closure	239-31547-02	239-31547-02	239-31547-02	239-31547-02	239-31547-02
2	Anode Rod (Magnesium)	224-47782-07	224-47782-07	224-47782-07	224-47782-07	224-47782-12
	Anode Rod (Aluminum) (Optional)	224-47783-08	224-47783-08	224-47783-08	224-47783-08	224-47783-08
	Anode Rod (A420) (Optional)#	224-49559-04	224-49559-04	224-49559-04	224-49559-04	224-49559-04
3	Inlet/Outlet Nipple 2" NPT X 3 1/2	229-32762-17	229-32762-17	229-32762-17	229-32762-17	229-32762-17
	Inlet/Outlet Nipple 2 1/2" NPT X 3 1/2 (Optional)	---	---	229-32762-22	229-32762-22	229-32762-22
4	Trim Ring-Grey	239-32793-05	239-32793-05	239-32793-05	239-32793-05	239-32793-05
5	T&P Relief Valve*	---	---	---	---	---
6	Finished Flange	239-41414-00	239-41414-00	239-41414-00	239-41414-00	239-41414-00
7	Brass Drain Valve	265-42351-02	265-42351-02	265-42351-04	265-42351-04	265-42351-04
8	Screw #8-18 x 1/2	239-32761-00	239-32761-00	239-32761-00	239-32761-00	239-32761-00
9	Cover Aux.	---	---	243-47670-00	243-47670-00	---
10	Clean Out O-Ring Gasket	205-18427-00	---	205-18427-00	---	---
	Clean Out Gasket (ASME)	---	205-32942-00	---	205-32942-00	205-32942-00
11	Clean Out Cover	205-18428-00	---	205-18428-00	---	---
	Clean Out Cover (ASME)	---	205-32941-00	---	205-32941-00	205-32941-00
12	Clean Out Cover Screws	239-82166-00	---	239-82166-00	---	---
	Clean Out Cover Screws (ASME)	---	239-32970-00	---	239-32970-00	239-32970-00
13	Clean Out Access Cover	243-20299-00	243-20299-00	243-20299-00	243-20299-00	243-20299-00

* A combination temperature and pressure relief valve is required by code as a protective device. It is not normally supplied by the tank manufacturer as original equipment. It is traditionally provided by the installer and is shown here for replacement parts purposes. The T&P valve for these storage tanks must be rated for the BTU input of the heater of the system where installed. P/N 230-33630-04 T&P valve 1" NPT female thread rated for 750,000 BTU.

\# A420 Anode may need to be cut to length

BRADFORD WHITE® WATER HEATERS

BRADFORD WHITE®
WATER HEATERS
Ambler, PA

For U.S. and Canada field service,
contact your professional installer or
local Bradford White sales representative.

Sales/**800-523-2931**
*Fax/**215-641-1670***
*Parts Fax/**215-641-2180***

Technical Support/**800-334-3393**
*Fax/**269-795-1089***

Warranty/**800-531-2111**
*Fax/**269-795-1089***

International:
Telephone/**215-641-9400**
*Telefax/**215-641-9750***

BRADFORD WHITE-CANADA® INC.
Mississauga, ON

Sales/**866-690-0961**
905-238-0100

*Fax/**905-238-0105***

Technical Support/**800-334-3393**

Email
parts@bradfordwhite.com
techserv@bradfordwhite.com

www.bradfordwhite.com