Model T-578

Dielectric Coupling

LEGEND VALVE

NO.	PART	MATERIAL
1	BODY	GALVANIZED STEEL
2	INSERT	PHENOLIC/COTTON RESIN

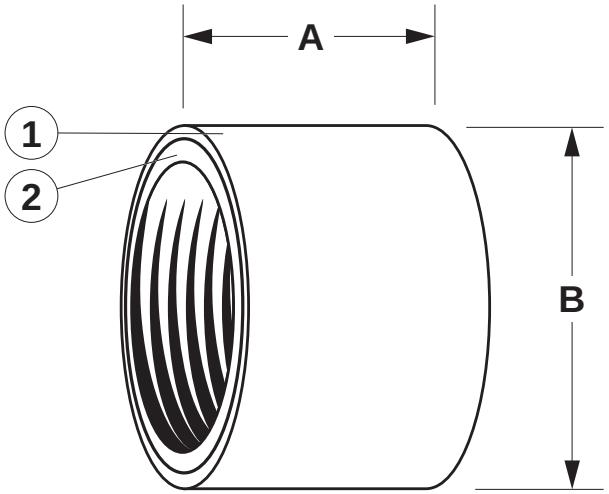

SIZE	1/2"	3/4"	1"	1-1/4"	1-1/2"	2"
A	1.77	1.77	1.76	2.08	2.15	2.43
B	1.23	1.39	1.76	2.13	2.40	2.77

- NOTES:
- PREVENTS CORROSION CAUSED BY GALVANIC ACTION
- 125 WOG
- 180˚F MAXIMUM TEMPERATURE