Model T/S-511

Stop & Waste Valve

LEGEND VALVE

NO.	PART	MATERIAL
1	BONNET	BRASS
2	BODY	BRASS
3	HANDLE	CAST IRON
4	STEM	BRASS
5	PACKING NUT	BRASS
6	PACKING	ASBESTOS FREE GRAPHITE
7	SEAT	NITRILE (NBR)
8	SEAT SCREW	BRASS
9	HANDLE NUT	BRASS
10	BLEEDER CAP	BRASS

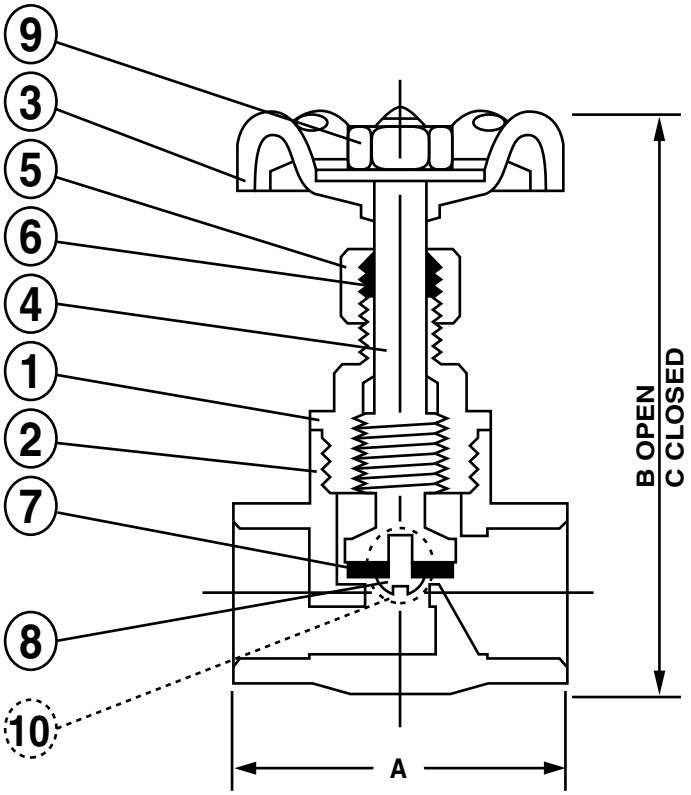

SIZE	1/2"	3/4"				
A	2.16	2.59				
B	2.63	2.53				
C	2.41	2.38				

- NOTES:
- 125 W.O.G.