ROHL
Authentic Luxury for Kitchen and Bath®

www.rohlhome.com
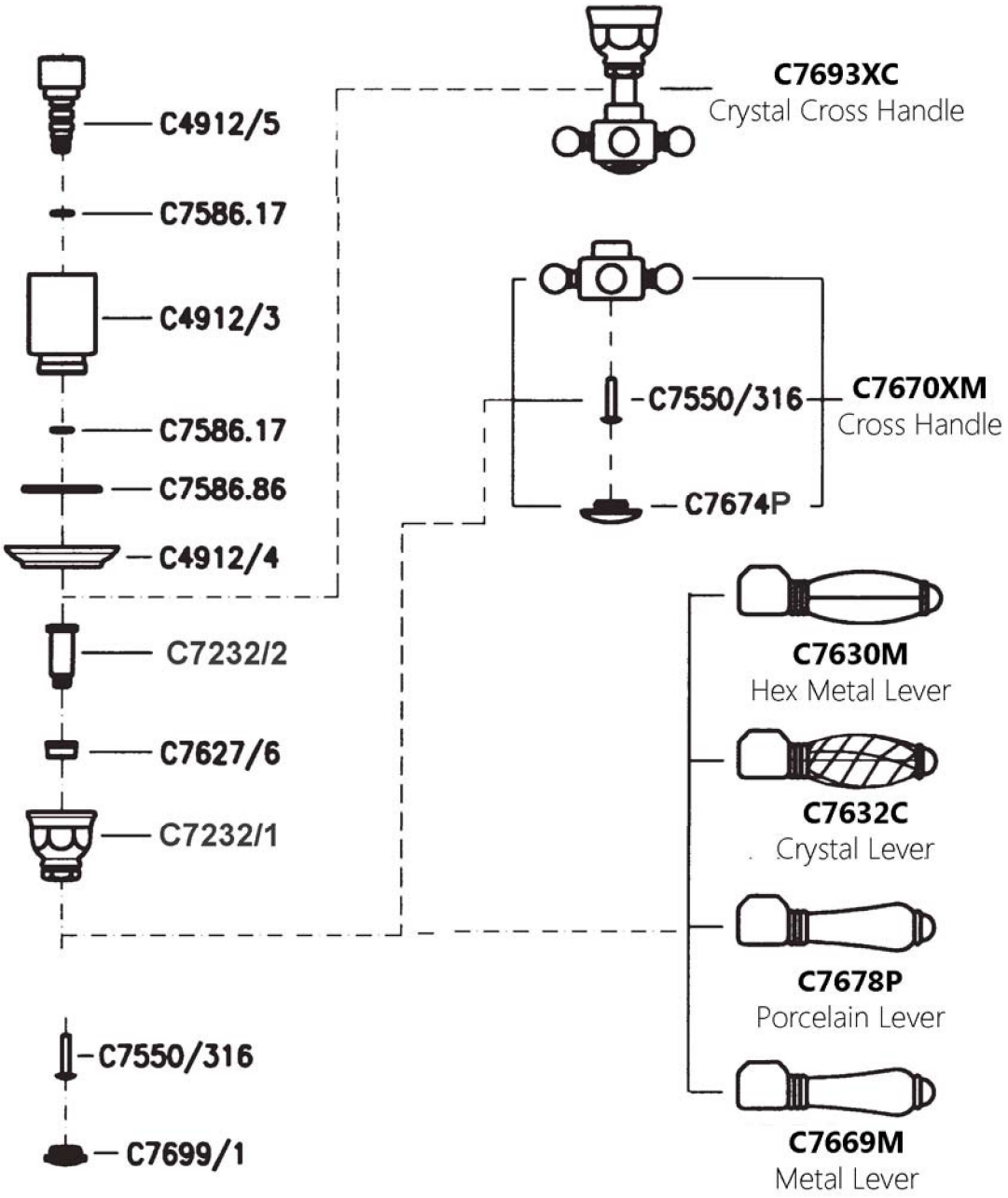
A4912 Spare Parts