SPECIFICATIONS (PATG-50-LO)
1. 3" inlet and outlet connections.
2. Max flow rate: 50 GPM
3. Liquid capacity: 41 Gallons
4. Max grease capacity: 128 Pounds
5. Unit weight w/std. covers: 70 Pounds
6. Maximum operating temperature 190˚F.

NOTES
1. Unit is manufactured in accordance to ASME grease interceptor standard #A112.14.3
2. Factory installed Built-In flow control.
3. For gravity drainage applications only. Do not use for pressure applications.
4. 3/8" thick high density polyethylene walls.
5. Three outlet options for easy rough in. Unit is shipped with outlet diffuser in location "B".
6. Engineered inlet and outlet diffusers are removable to inspect/clean piping.
7. For on-the-floor applications.
8. Locate interceptor as close as possible to grease producing fixtures.
9. Kitchen-duty polyethylene cover with 1/4" stainless steel bolts. (Load Capacity 500 lbs.)
10. Integral Air Relief / Anti-siphon.

DIFFUSION FLOW TECHNOLOGY
The inlet diffuser splits incoming effluent into two paths that utilize the entire liquid volume of the tank for efficient grease separation. The calibrated openings greatly reduce effluent turbulence. The effluent enters the main chamber without disturbing the existing grease or sediment layers.

The integral air relief/anti-siphon in the top of the outlet diffuser allows pressure stabilization within the unit during operation. The bottom of the outlet diffuser allows only effluent which is free of grease to exit the tank. It can easily be attached to any of the three outlets provided to ease jobsite piping layouts.

ENGINEER SPECIFICATION GUIDE
Schier Trapper IIÊ grease interceptor model # _____shall be lifetime guaranteed and made in USA of seamless, rotationally-molded High Density Polyethylene with minimum 3/8" uniform wall thickness. Interceptor shall be furnished for above grade installation. Interceptor shall be built in accordance to ASME A112.14.3 (type C), with built-in flow control, built-in test caps and three outlet options. Interceptor flow rate shall be _____GPM. Interceptor grease capacity shall be _____lbs. Cover shall provide water/gas-tight seal and have minimum 500 lbs load capacity.

OPTIONS:
Å Male pipe thread connections
Å 4" Plain end pipe or male pipe thread connections

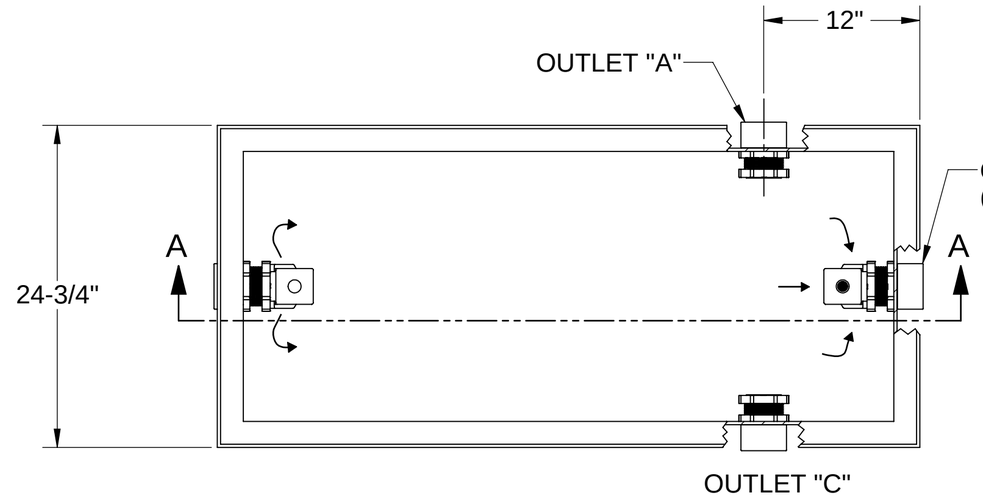

TOP VIEW
(W/O COVER)

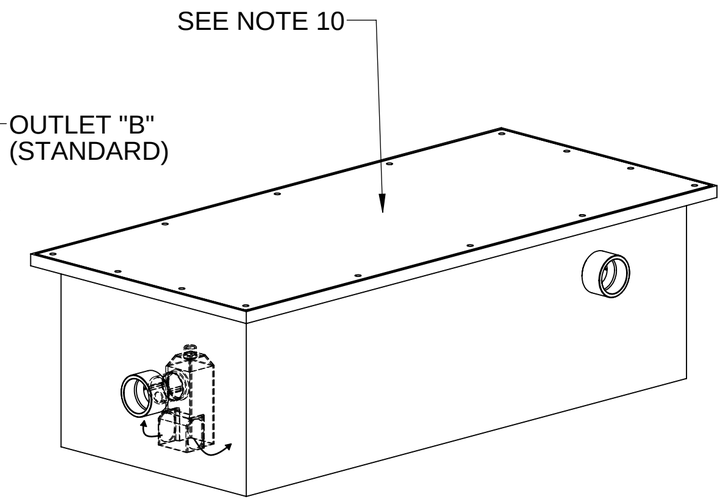

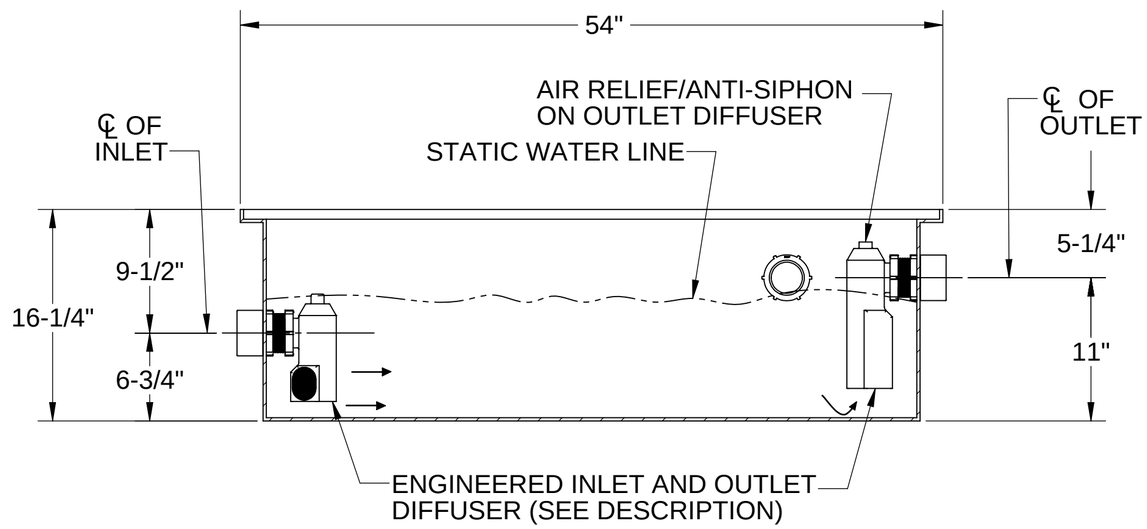

SECTION A-A

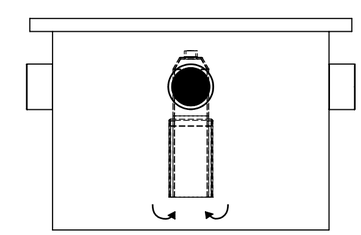

END VIEW

grease interceptors | oil separators | solids interceptors | chemical waste tanks | process systems

PROPRIETARY AND CONFIDENTIAL

THE INFORMATION CONTAINED IN THIS DRAWING IS THE SOLE PROPERTY OF **SCHIER PRODUCTS**. ANY REPRODUCTION IN PART OR AS A WHOLE WITHOUT THE WRITTEN PERMISSION OF **SCHIER PRODUCTS** IS PROHIBITED.

PART NUMBER: PATG-50-LO

SPECIFICATION SHEET

DESCRIPTION:

TRAPPER SERIES POLYETHYLENE GREASE INTERCEPTOR 50 GPM, 41 LIQUID GALLONS, 128 GREASE POUNDS CAPACITY

DWG BY: TEU	DATE: 11/29/07	REV: 2 - 1/19/12	MATL: PE

Schier Products
9500 Woodend Road
Edwardsville, KS 66111
Tel: 800-827-7119
Fax: 800-827-9664
www.schierproducts.com

Made in the U.S.A

SCHIER PRODUCTS
Pioneering Drain Line Purity