Kathryn® | K-2297

24" rectangular undermount bathroom sink

Features

- Rectangular basin
- Overflow drain
- No faucet holes; requires wall- or counter-mount faucet
- Coordinates with other products in the Kathryn collection



Sustainability

Available Colors/Finishes

Color tiles intended for reference only.

	0	White
	96	Biscuit
	7	Black Black

1-800-4KOHLER (1-800-456-4537)
Kohler Co. reserves the right to make revisions without notice to product specifications.
For the most current specification sheet, go to www.kohler.com USA or www.kohler.ca Canada.
4-22-2026 10:2 - US-CA

THE BOLD LOOK OF KOHLER

Codes/Standards

ADA, CSA B651 compliant when installed to the specific requirements of these regulations.

ADA CSA B651

ASME A112.19.2/CSA B45.1
ADA
ICC/ANSI A117.1
CSA B651

Technical Information

With Overflow:	Yes
Drain Hole Diameter:	1-3/4" (44 mm)
Basin Configuration:	Single Bowl
Basin Length:	21-3/8" (543 mm)
Basin Width:	13-1/8" (333 mm)
Basin Depth:	4-7/8" (123 mm)

Material

- Vitreous china

Recommended Products/Accessories

K-23726 Drain treatment

K-23725 Cast iron cleaner

Warranty

See website for detailed warranty information.

KOHLER® Vitreous China Bathroom Sink Lifetime Limited Warranty

1-800-4KOHLER (1-800-456-4537)
Kohler Co. reserves the right to make revisions without notice to product specifications.
For the most current specification sheet, go to www.kohler.com USA or www.kohler.ca Canada.
4-22-2026 10:2 - US-CA

THE BOLD LOOK OF KOHLER.

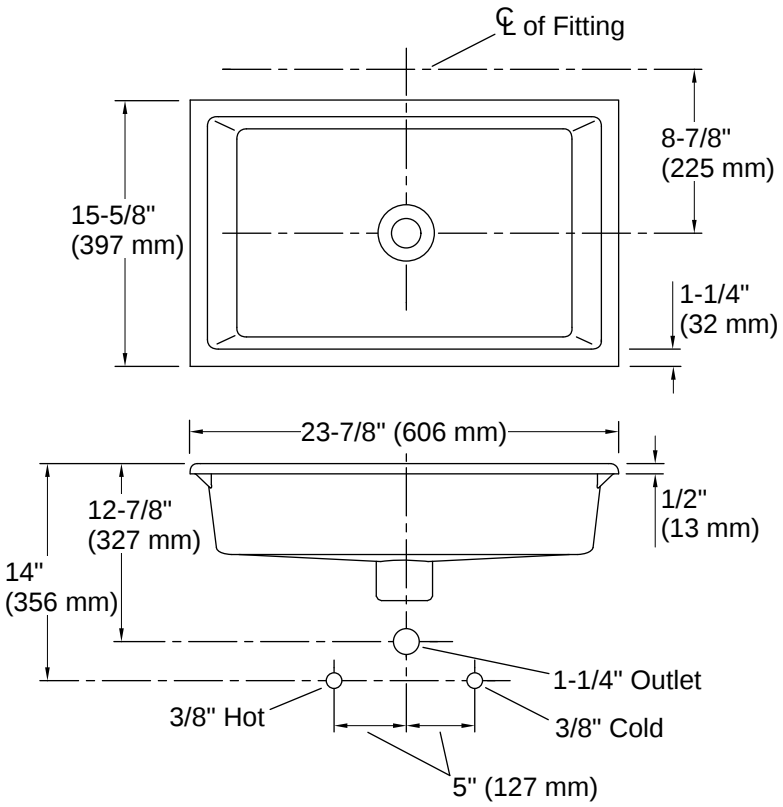

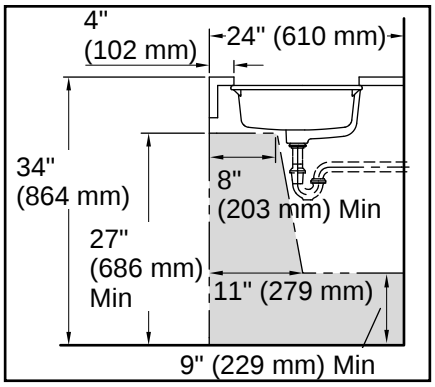

Recommended ADA Installation

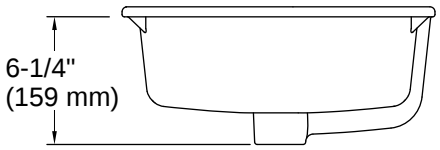

Installation

- Undermount

Installation Notes

Install this product according to the installation instructions.

NOTICE: Countertop manufacturer or cutter must use the current product template available at www.kohler.com, or by calling 1-800-4KOHLER. Kohler Co. is not responsible for cutout errors when the incorrect cutout template is used.
Select a faucet with a minimum spout reach of 4-5/8" (117 mm). Refer to the faucet rough-in dimensions to ensure the spout will reach over the bathroom sink rim into the basin.
Product dimensions are nominal and may vary per ASME A112.19.2 tolerances.
ADA, CSA B651 compliant when installed to the specific requirements of these regulations.

1-800-4KOHLER (1-800-456-4537)
Kohler Co. reserves the right to make revisions without notice to product specifications.
For the most current specification sheet, go to www.kohler.com USA or www.kohler.ca Canada.
4-22-2026 10:2 - US-CA

THE BOLD LOOK OF KOHLER.